California High-Speed Rail Authority

RFP No.: HSR 13-57

Request for Proposals for Design-Build Services for Construction Package 2-3

Book IV, Part F.2
Plans Preparation Manual

04/02/2014 - RFP No.: HSR13-57

TABLE OF CONTENTS

1.0 GENERAL 1

1.1 PURPOSE OF MANUAL 1

1.2 APPLICATION OF THE PLAN PREPARATION MANUAL 1

1.3 DEFINITIONS 1

1.4 USE OF COMPUTER AIDED DESIGN AND DRAFTING (CADD) SOFTWARE 2

1.5 DEVELOPMENT OF ELECTRONIC FILES 2

1.6 ELECTRONIC DELIVERY PROCESS 3

2.0 CONTRACT DRAWINGS 3

2.1 GENERAL PROCEDURES 3

2.2 DRAFTING STANDARDS 3

2.2.1 TEXT ROTATION AND PLACEMENT 5

2.3 U.S. CUSTOMARY UNITS 6

2.3.1 DIMENSIONS 6

2.3.2 LOCATION OF CONSTRUCTION FEATURES (STATION / OFFSET) 7

2.3.3 ACCURACY / PRECISION 7

2.3.4 STATIONING 8

2.4 PLAN SHEET BORDERS 9

2.4.1 TITLEBLOCK 10

2.4.2 REVISION BLOCK 11

2.4.3 STAMP AND LOGO AREA 12

2.4.4 SEAL AND SIGNATURE INFORMATION 12

2.5 CONTRACT DRAWINGS SUBMITTALS 13

2.5.1 PRELIMINARY DESIGN DRAWINGS (PRELIMINARY ENGINEERING FOR PROCUREMENT) 13

2.5.2 CONSTRUCTION DRAWINGS (DESIGN BASELINE REPORT) 14

2.5.3 CONSTRUCTION DRAWINGS (CHSTP DESIGN SUBMITTALS, READY FOR CONSTRUCTION (RFC) SUBMITTALS AND AS-BUILT SUBMITTALS) 16

2.5.4 PROJECT PLAN FILE FORMAT 20

2.6 USE OF STANDARD AND DIRECTIVE DRAWINGS 20

3.0 FACILITY NAMING CONVENTIONS 22

3.1.1 SUBDIVISIONS 22

3.1.2 MILEPOSTS 22

3.1.3 TRACK 25

3.1.4 INTERLOCKING 26

3.1.5 STATIONING 27

04/02/2014 - RFP No.: HSR13-57

3.1.6 ELEMENTS DESIGNATOR 27

4.0 CONSTRUCTION DRAWINGS 41

4.1 CONSTRUCTION DRAWING SUBMITTALS 41

4.1.1 CONSTRUCTION DRAWING SUBMITTAL REQUIREMENTS 41

4.1.2 SIGN AND SEAL REQUIREMENTS 41

4.2 AS-BUILT DRAWINGS 41

4.2.1 AS-BUILT DRAWING PROCEDURES 42

4.2.2 AS-BUILT STAMPS 44

4.3 THIRD PARTY DRAWINGS 44

APPENDIX A – FACILITY NAMING CONVENTION SUMMARY TABLE 45

APPENDIX B –PRELIMINARY ENGINEERING FOR PROCUREMENT DRAWING SAMPLE PLAN CHECKLISTS 48

APPENDIX C –PRELIMINARY ENGINEERING FOR PROCUREMENT DRAWING SAMPLE PLANS 66

04/02/2014 - RFP No.: HSR13-57

1.0 GENERAL

1.1 PURPOSE OF MANUAL

The purpose of this Manual is to provide guidelines for all drawings prepared for the California High-Speed Train Project (CHSTP). This Manual will provide the guidelines that shall be used by all parties involved in the preparation of all civil, structural, roadway, utility and other plans and drawings prepared for the California High-Speed Rail Authority (Authority). Adherence to these guidelines will result in the required level of uniformity and consistency of the drawings all plans.

1.2 APPLICATION OF THE PLAN PREPARATION MANUAL

The guidelines provided in this Manual shall be used for all project phases from 15% design through final design and construction. Additionally, all parties who shall use these guidelines include, but are not limited to all regional consultants, the PMT, and the final Designer/Contractor.

1.3 DEFINITIONS

As-Built Additional Drawings	Drawings generated during the as-built process indicating new or additional work constructed
As-Built Drawings	Construction Drawings modified to reflect design changes and actual conditions of construction, conformed from field and design changes directly from the Ready for Construction (RFC) drawings
As-Built Revised Drawings	Drawings generated during the as-built process for the purpose of providing clear and concise as-built correction information, but contain with no new or additional work added
Contract Change Order	A written order to the contractor, issued after the execution of the contract, authorizing a change in the work
Contract drawings	Drawings files that are specific to the project and contract. Contract drawings include preliminary design drawings and construction drawings.
Construction Drawings	Drawings furnished by the contractor representing the post preliminary design project delivery, from final design through completion of construction. Construction drawings include Final Design drawings, Ready for Construction (RFC) drawings as As-Built drawings.
Contract Number	The number assigned to an individual construction project
Directive Drawings	Directive Drawings provide mandatory design criteria in a graphical format that the Contractor shall follow and apply to ensure consistency during design for system-wide elements and features
Drawing Number	Number found in the titleblock assigned to an preliminary, construction, standard or directive drawings
Preliminary Drawings	Drawings prepared during the preliminary design phase
Preliminary Engineering for Procurement	Preliminary engineering that demonstrate technical feasibility and constructability for procurement

04/02/2014 - RFP No.: HSR13-57

Ready for Construction Drawings (RFC)	Construction drawings designed to 100% that are ready and used during construction. They are the basis for the as-built drawings
Regional Consultant	The consultant selected by the Authority to be responsible for the overall preliminary design of the project
As-Built Revised Drawings	Drawings generated during the as-built process for the purpose of providing clear and concise as-built correction information, but contain with no new or additional work added
Standard Drawings	Standard project elements for general use in the construction of the California High-Speed Train system, as determined applicable by the Contractor
Title Block	The title block in these guidelines is defined as the lower portion of the drawing containing information such as drawing title, signature blocks, project logos, etc.

1.4 USE OF COMPUTER AIDED DESIGN AND DRAFTING (CADD) SOFTWARE

CADD is an integral part of the project delivery process, from preliminary design through the completion of construction and as-built drawings. For drafting and sheet preparation, the CHSTP standard CADD production platform shall be Bentley's MicroStation V8i (Select Series 1 or higher). The CHSTP standard vertical design platform shall be Bentley's Inroads Suite V8i. For additional information regarding CADD software and subsequent computer systems requirements, see Section 1.2 of the CHSTP CADD Manual.

1.5 DEVELOPMENT OF ELECTRONIC FILES

Electronic files for all CHST Project design drawings must conform to the following information and developed with the following CADD best practices:

General

- Use only the "Default" model space. One model per DGN
- Use only CHSTP seed files to create master and sheet files

Master files

Master files typically contain proposed design information for the design elements of the project. This file can include, but is not limited to features, such as track/road alignments, alignment labels, right-of-way line, and construction features (retaining wall, guard rails, intrusion barriers, et al.). All master files must follow the guidelines below:

- For master files that need to be geo-referenced, use correct seed file from the corresponding State Plane Coordinates system.

04/02/2014 - RFP No.: HSR13-57

Contract drawings:

Contract drawings are sheet files that are specific to the project and contract. They contain items such as callouts, notes, linework and symbology that define the items of work shown. Specific sheet content, sample plans and checklists are contained in Section 2.5 and Appendix B and C of this Manual.

1.6 ELECTRONIC DELIVERY PROCESS

Information regarding electronic submittals can be found in Section 1.3.7 of the CHSTP CADD Manual.

2.0 CONTRACT DRAWINGS

2.1 GENERAL PROCEDURES

Contract drawings must be clear and concise in indentifying all items of work that a contractor can interpret and build. All items of work shall use dimensioning and labeling on plan, profile and detail sheets to clearly indentify quantity items. This will ensure that the bidders and contractors are not expected or need to scale quantity items from a hard copy print.

Contract drawings are supplemented by the CHSTP Standard and Directive Drawings. Do not include the drawing of a standard detail as it is already shown on CHSTP Standard Drawings. For more detailed information regarding the use of standard and directive drawings for CHSTP contract drawings, see Section 2.6 of this Manual.

All contract drawings shall utilize the standardized Facility Naming Conventions as detailed in Section 3.0 of this Manual.

2.2 DRAFTING STANDARDS

General Drafting Standards to be followed for the creation of contract drawings:

- Lineweight and linestyles shall conform to Section 4.5 and Appendix G of the CHSTP CADD Manual.
- Abbreviations and symbology shall conform to the CHSTP Acronyms and Abbreviations, and Symbols Directive Drawings
- Text height shall conform to Section 4.3 of the CHSTP CADD Manual. Project requires the use of uppercase characters for all text and dimensioning found within the contract drawings.
- The placement and rotation of text shall conform to Section 2.2.1 of this Manual. All project plan notes shall be placed in the upper right hand corner of the sheet whenever possible to allow consistency of all contract drawings. Topographical information shall be masked underneath the notes to provide additional clarity for the information shown on the project plan.
- Placement of text shall not interfere with other text, cross linework or dimensions. The use of text mask is allowable and recommended whenever possible to provide additional clarity for the information shown on the project plan.
- Sheet match lines shall be perpendicular to the alignment line. Alignment annotation shall be clipped out if it interferes with the Matchline cell.

04/02/2014 - RFP No.: HSR13-57

- Leaders and callouts shall be shown with arrowheads and straight leader lines to allow for consistency of all contract drawings. The use of curved leaders is not allowable.

04/02/2014 - RFP No.: HSR13-57

2.2.1 TEXT ROTATION AND PLACEMENT

Text placement and rotation shall be consistent throughout all CHSTP contract drawings. To ensure consistency is met, text placement and rotation shall be as shown below:

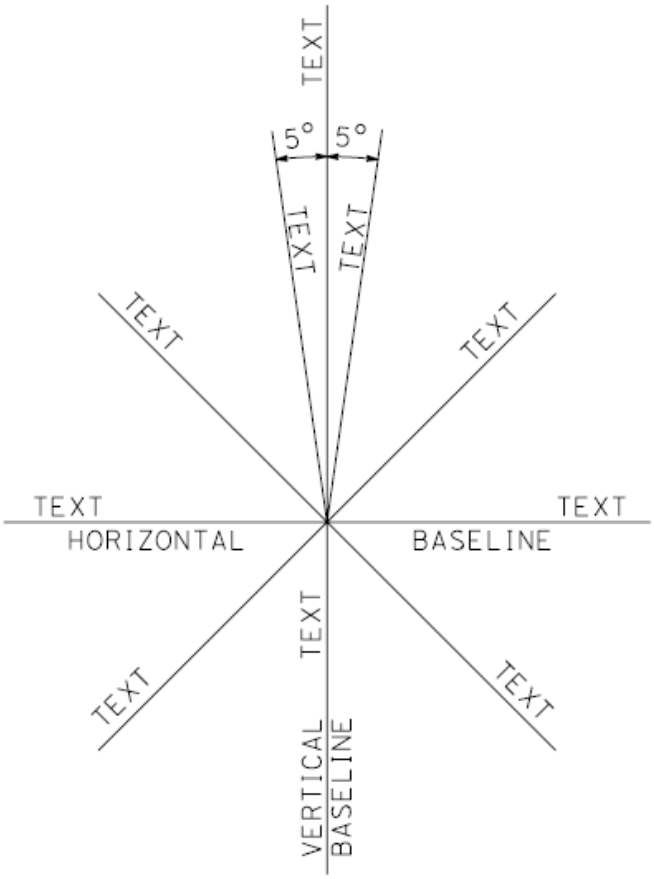

Text orientation shown with 5° of the vertical baseline is up to the discretion of the project plan preparer. Be consistent on all contract drawings.

04/02/2014 - RFP No.: HSR13-57

2.3 U.S. CUSTOMARY UNITS

2.3.1 DIMENSIONS

The use of decimal feet versus feet and inches shall be based upon of the item of work. The following parameters shall be followed for the various prepared CHTSP design drawings:

General Dimension Guidelines

- Civil plans, including track, grading, drainage and utility plans: Decimal feet
- Sections and details within civil plans: Feet and inches
- Structural, architectural, mechanical, traction power, overhead catenary, train control, track work and electrical drawings, sections, and details: Feet and inches
- Dimension text shall always be parallel and above the dimension line

Specific Items of Work Values:

- Pavement structures and depths: Feet and Inches. When pavement depth is less than one foot, the depth can be expressed in inches only (i.e., 6" AB).
- Formed concrete construction features (bridges, walls, drainage features, curbs, sidewalks, etc.): Feet, inches and fractions of inches.
- Manufactured or fabricated items (generally): Feet, inches and fractions of inches.
- Surface cross slopes and superelevations: Percents, with the exception of sub-ballast cross slopes which shall be presented as a ratio of 24:1
- Pipe / Ditch slopes: Shown as decimal value. (i.e., 0.005).
- Side slopes: Non-dimensional ratio with the horizontal component shown first and then the vertical (X:Y). When the side slope becomes steeper than 1:1, the horizontal component is shown as a fraction (i.e., ¾:1).
- Flares and tapers: Non-dimensional ratio with the longitudinal component shown first and then the lateral offset component (i.e., 20:1, 15:1).
- All dimensions in feet, tenth of a foot or hundreds of a foot shall be shown with a universal foot symbol (apostrophe) as a suffix. For dimensions less than one foot, a zero shall be placed in front of the decimal (i.e., 0.25').
- All dimensions in inches shall be shown with the universal inch symbol (quotation mark). When the dimension is one foot or greater, a hyphen is placed to separate the foot and inches values with no space before or after the hyphen (i.e., 1'-6". When the dimension is less than one foot, a zero or hyphen designation is not required to lead the inch value. (i.e., 6", not 0'-6"). Fractions of an inch shall be down as a stacked fraction (i.e., 10 ½").
- Additionally, the CHTSP standard details shall be used as a guide to determine when dimensioning standards shall be decimal feet or feet and inches.

For design drawings specifically prepared for state highway facilities, the standards set forth in Section 2-1.3 U.S. Customary Units Standard in the Caltrans Plan Preparation Manual shall be followed. See the link below:

http://www.dot.ca.gov/hq/oppd/cadd/usta/ppman/2-1.pdf

04/02/2014 - RFP No.: HSR13-57

2.3.2 LOCATION OF CONSTRUCTION FEATURES (STATION / OFFSET)

All construction features shall be located using stationing and, as applicable to the item of work, offset distances to an established station line. Offset distances from a station line shall include a foot symbol suffix (apostrophe). Exceptions to the above standard are instances in which construction items are located by post mile or from fixed objects.

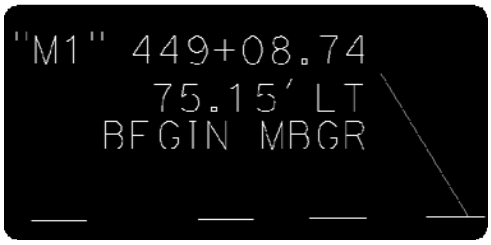

2.3.3 ACCURACY / PRECISION

Accuracy to the nearest foot, tenth of a foot, or hundreds of a foot, is dependent on the located construction feature.

- Elevations, distances and dimensions in decimal feet are provided to two decimal places. Accompanying foot symbols are not required for spot elevation or datum elevations (i.e., Elevation: 654.54)
- Contour lines shall be rounded to the nearest whole number. No foot symbol is required.
- Horizontal coordinates (northings and eastings) are provided to three decimal places (i.e., 2044643.712, 6016950.302).
- Bearings for all alignment geometry shall be expressed in degree, minutes and seconds with the N (northing) prefix and E (easting) suffix (i.e., N 70°35'32.5" E).
- Angles shall also be shown in degrees, minutes and second (i.e., 48° 38'18").
- Dimensions expressed in feet and inches shall be given to the nearest 1/8" or as appropriate. (1-1⅛").
- For station/offset callouts, the accuracy shall match the examples shown below:
    - Stationing: 180+45.15 / Offset: 74.15' LT or RT
- All other quantities such as volume, weight, slope, et al., shall be expressed with an appropriate level of precision.

04/02/2014 - RFP No.: HSR13-57

2.3.4 STATIONING

Stationing shall be based upon scale. For 50 scale or greater, stationing shall be based upon 100 foot stationing with full annotation at 500' stations. Annotation at 100 foot intervals shall be a half tick mark only. 500' interval shall show a full tick mark and station label. For scale less than 50 scale, stationing shall be based upon 100 foot stationing with full annotation at 100' stations. Annotation at 100 foot intervals shall be shown as a full tick mark and station label.

Each station label shall have the subdivision code prefix. See Section 3.1.1 of this Manual for a complete list of CHSTP subdivision code.

See examples shown below.

Stationing (50' scale or greater)

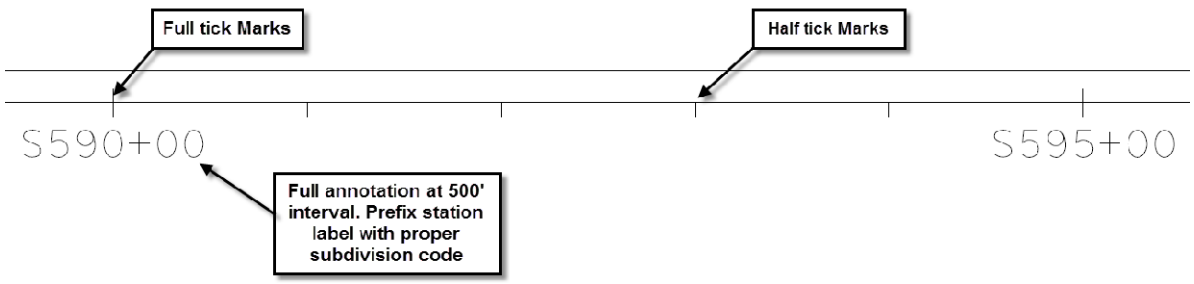

Stationing (Less than 50' scale)

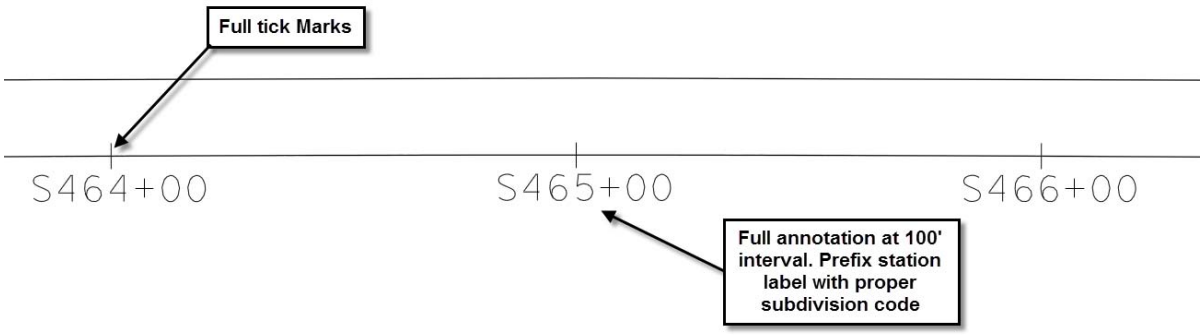

04/02/2014 - RFP No.: HSR13-57

2.4 Plan Sheet Borders

CHSTP borders shall be used for all contract drawings preparation.

General Border Guidelines

- 22x34 outside border line for full size plot
- The CHSTP border has a work limit line on Level 64 No Plot. Never extend the drawing, details and notes beyond work limit line.
- With the exception of adding a company logo, the border shall not be edited/revised.

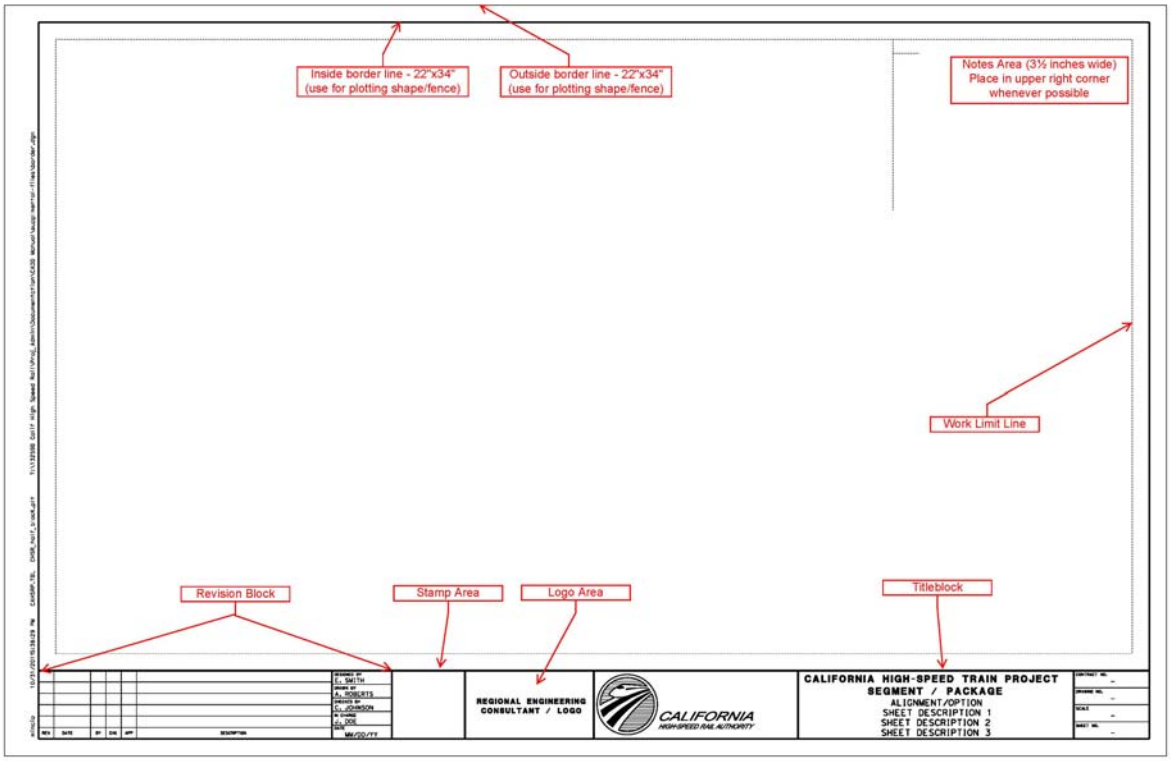

04/02/2014 - RFP No.: HSR13-57

2.4.1 TITLEBLOCK

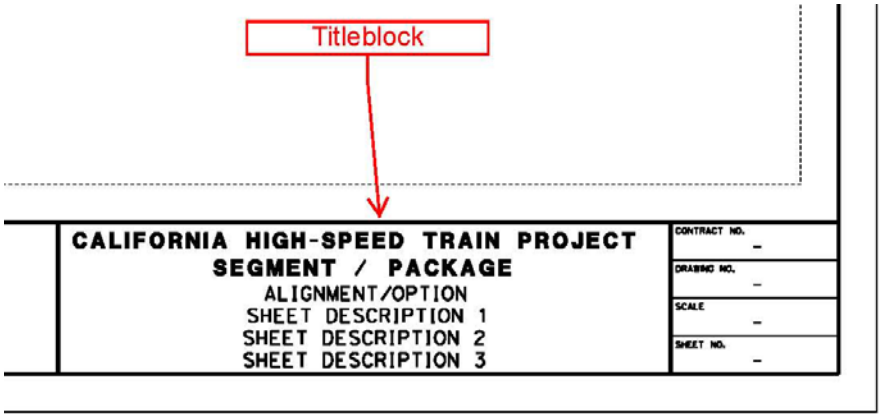

General Titleblock Guidelines

- Titleblock tags shall be placed in the drawing using the “titleblock” cell in the CHSTP cell library.
- Segment designation shall be placed in the titleblock during 15% design. Subdivision Package designation shall be placed during Preliminary Engineering for Procurement design. The subdivision package designation shall remain through the completion of the as-built drawings for the same contract.
- The Sheet number tag shall not be populated during 15% and Preliminary Engineering for Procurement submittal. Sheet number information shall be required for construction drawings and as-built drawings.

04/02/2014 - RFP No.: HSR13-57

2.4.2 REVISION BLOCK

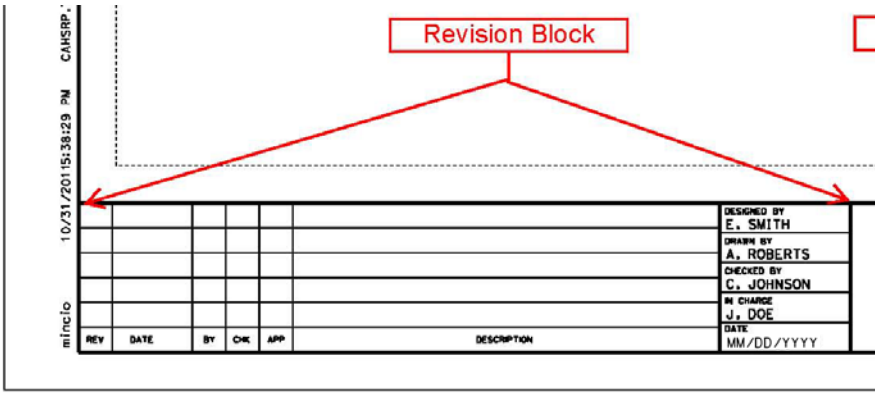

General Revision Block Guidelines

- Revision Block tags shall be placed in the drawing using the “titleblock” cell in the CHSTP cell library.
- Revision block shall remain blank during 15% and Preliminary Engineering for Procurement design. The construction drawings and as-built drawings shall have the revision block populated as needed.
- Names shall be shown as first initial (period) (space) last name.
- Date shall be month, day and year format (MM/DD/YYYY).

04/02/2014 - RFP No.: HSR13-57

2.4.3 STAMP AND LOGO AREA

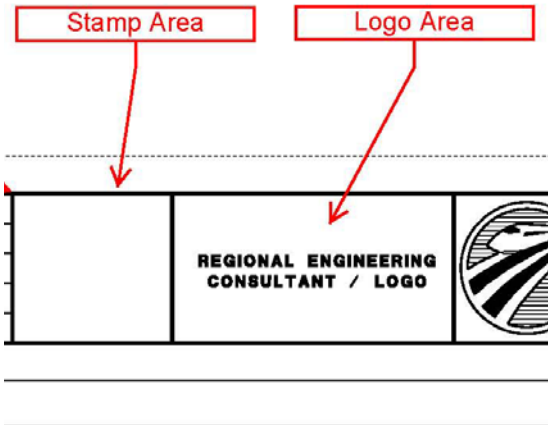

Stamp Area

During preliminary design, stamps shall be placed in the drawings by using the levels defined in the CHSTP dgnlib. The levels are defined for each submittal, from 15% through Preliminary Engineering for Procurement. Level display will be dictated by submittals defined in Levels 75-80. See Appendix B of the CHSTP CADD Manual for additional information regarding the seal/signature area of the border.

Logo Area

The logo area is user defined. Company logos can be placed in the area for plan preparation. Logos cannot be placed anywhere else in the border.

2.4.4 SEAL AND SIGNATURE INFORMATION

Engineering seals and signature shall not be placed in the stamp area during the preliminary design phase. With the exception of survey data control sheets, no seal or signatures shall be required for 15%, Preliminary Engineering for Procurement drawings.

A seal and signature by a licensed land surveyor is required for the survey data control sheets during Preliminary Engineering for Procurement. See Section 4.1.2 of this Manual for signature and seal requirements for construction drawings.

04/02/2014 - RFP No.: HSR13-57

2.5 Contract Drawings Submittals

2.5.1 PRELIMINARY DESIGN DRAWINGS (PRELIMINARY ENGINEERING FOR PROCUREMENT)

Preliminary Design Drawings prepared for Preliminary Engineering for Procurement submittals included, but are not limited to, the drawings shown in the below chart. They shall be grouped into volumes based upon discipline. Checklist and Sample plans can be found in Appendix B and C of this document.

Plan	Scale (Full Size)
VOLUME 1 - GENERAL and TRACK GUIDEWAY	
VOLUME 1A - GENERAL	
TITLE SHEET - VICINITY MAP - GENERAL NOTES	NO SCALE
GENERAL / TRACK GUIDEWAY – INDEX OF DRAWINGS	NO SCALE
GENERAL - SURVEY CONTROL DATA	1"=100' / ENLARGED DETAILS AS NEEDED
VOLUME 1B - TRACK GUIDEWAY	
TRACK GUIDEWAY- GENERAL NOTES	NO SCALE
TRACK GUIDEWAY - TYPICAL SECTIONS	1" = 10'
TRACK GUIDEWAY - KEY MAP	VARIES
TRACK GUIDEWAY - HORIZONTAL ALIGNMENT DATA TABLE	NO SCALE
TRACK GUIDEWAY - PLAN AND PROFILE	1"=100'
VOLUME 2 - TRACK STRUCTURES	
TRACK STRUCTURES - INDEX OF DRAWINGS	NO SCALE
TRACK STRUCTURES - GENERAL NOTES	NO SCALE
TRACK STRUCTURES - KEY MAP	VARIES
TRACK STRUCTURES - TYPICAL SECTIONS (AERIAL /TUNNELS)	1" = 10'
TRACK STRUCTURES - TRACK STRUCTURAL PLAN (AERIAL STRUCTURES)	
TOP OF RAIL	NO SCALE
ELEVATION	1" = 40'
PLAN	1" = 40'
TRACK STRUCTURES - TRACK STRUCTURAL PLAN (TUNNEL STRUCTURES)	
TOP OF RAIL	NO SCALE
ELEVATION	1" = 40'
PLAN	1" = 40'

04/02/2014 - RFP No.: HSR13-57

TRACK STRUCTURES - DRAFT GENERAL PLAN (SMALL STRS)	
TOP OF RAIL	NO SCALE
ELEVATION	MATCH PLAN
PLAN	1" = 20' , 1" = 30 or 1" = 40' (DETERMINED BY SIZE OF STRUCTURE)
TYPICAL SECTION	1" = 10'
RETAINING WALL (ID, LENGTH, AVERAGE HEIGHT)	NO SCALE
VOLUME 3 - ROADWAY	
ROADWAY - INDEX OF DRAWINGS	NO SCALE
ROADWAY - GENERAL NOTES	NO SCALE
ROADWAY - INDEX MAP	VARIES
ROADWAY - GRADE SEPARATION - "STREET NAME"	
PLAN	1" = 100'
PROFILE	H: 1" = 100' ; V: 1"=10'
TYPICAL SECTION	1" = 10'
ALIGNMENT CURVE DATA	NO SCALE
RETAINING WALL (ID, LENGTH, AVERAGE HEIGHT)	NO SCALE
ROADWAY – "STREET NAME" - DRAFT GENERAL PLAN	
PROFILE GRADE	NO SCALE
ELEVATION	1" = 20'
PLAN	1" = 20'
TYPICAL SECTION	1" = 10'
RETAINING WALL (ID, LENGTH, AVERAGE HEIGHT)	NO SCALE
VOLUME 4 - UTILITIES	
UTILITIES - INDEX OF DRAWINGS	NO SCALE
UTILITIES - GENERAL NOTES	NO SCALE
UTILITIES – COMPOSITE UTILITY PLANS - KEY MAP	VARIES
UTILITIES - UTILITY COMPOSITE PLAN - ALONG TRACK ALIGNMENT	1" = 100'
UTILITIES - UTILITY PROTECTION & RELOCATION - PLAN AND PROFILE	1"=50'
FOR HIGH RISK UTILITIES	-
AS NEEDED, AT CRITICAL AREAS, PINCH POINTS	-
UTILITIES - GRADING AND DRAINAGE - KEY MAP	VARIES
UTILITIES - GRADING AND DRAINAGE PLANS - ALONG TRACK ALIGNMENT	1" = 100'
UTILITIES - GRADING AND DRAINAGE DETAILS	1"=50'
AS NEEDED, AT CRITICAL AREAS, PINCH POINTS	-

2.5.2 CONSTRUCTION DRAWINGS (DESIGN BASELINE REPORT)

Construction Drawings prepared by the contractor during final design for the Design Baseline Report submittal includes, but are not limited to, the drawings shown in the below chart.

04/02/2014 - RFP No.: HSR13-57

Plan	Scale (Full Size)
TITLE SHEET	NO SCALE
INDEX OF DRAWINGS	NO SCALE
TRACK CIVIL - TYPICAL SECTIONS	NO SCALE
TRACK GUIDEWAY - PLAN AND PROFILE	-
PLAN	1" = 100'
PROFILE	H: 1" = 100' ; V: 1"=10'
TRACK STRUCTURES - TYPICAL SECTIONS (AERIAL /TUNNEL STRUCTURES)	1" = 10'
TRACK STRUCTURAL PLAN (AERIAL/TUNNEL STRUCTURES)	-
TOP OF RAIL	NO SCALE
ELEVATION	1" = 40'
PLAN	1" = 40'
TRACK STRUCTURAL - GENERAL PLAN (SMALL STRUCTURES)	-
TOP OF RAIL	NO SCALE
ELEVATION	MATCH PLAN
PLAN	1" = 20' , 1" = 30 or 1" = 40' (DETERMINED BY SIZE OF STRUCTURE)
TYPICAL SECTION	1" = 10'
RETAINING WALL (ID, LENGTH, AVERAGE HEIGHT)	NO SCALE
TRACK STRUCTURES - RETAINING WALL - PLAN AND PROFILE	-
PLAN	1" = 50'
PROFILE	H: 1" = 50' ; V: 1"=10'
ROADWAY CIVIL* (SEE NOTE 1) - GRADE SEPARATION - "STREET NAME"	-
PLAN	1" = 50'
PROFILE	H: 1" = 50' ; V: 1"=10'
TYPICAL SECTION	1" = 10'
ALIGNMENT CURVE DATA	NO SCALE
RETAINING WALL (ID, LENGTH, AVERAGE HEIGHT)	NO SCALE
ROADWAY STRUCTURES* (SEE NOTE 1) - GENERAL PLAN	-
PROFILE GRADE	NO SCALE
ELEVATION	MATCH PLAN
PLAN	1" = 20' , 1" = 30 or 1" = 40' (DETERMINED BY SIZE OF STRUCTURE)
TYPICAL SECTION	1" = 10'
RETAINING WALL (ID, LENGTH, AVERAGE HEIGHT)	NO SCALE
COMPOSITE UTILITY PLAN	1" = 100'
FOR EXISTING, PROPOSED AND RELOCATED UTILITIES	-
GEOMETRIC APPROVAL DRAWINGS	*SEE NOTE 1

** NOTE 1:*
GEOMETRIC APPROVED DRAWINGS, ROADWAY CIVIL AND ROADWAY STRUCTURAL DRAWINGS UNDER STATE OR THIRD PARTY JURISDICTION SHALL FOLLOW CALTRANS OR THIRD PARTY STANDARDS.

04/02/2014 - RFP No.: HSR13-57

2.5.3 CONSTRUCTION DRAWINGS (CHSTP DESIGN SUBMITTALS, READY FOR CONSTRUCTION (RFC) SUBMITTALS AND AS-BUILT SUBMITTALS)

Construction Drawings prepared by the contractor during final design submittals include, but are not limited to, the drawings shown in the below chart. Final design submittals include CHSTP Design Submittals, Ready for Construction (RFC) submittals and As-Built submittals.

Plan* (See Note 1)	Scale (Full size)
GENERAL	
TITLE SHEET	NO SCALE
INDEX OF DRAWINGS	NO SCALE
FACILITY LOCATION MAP	NO SCALE
SURVEY	
SURVEY - GENERAL NOTES	NO SCALE
SURVEY - SURVEY DATA CONTROL PLANS	1" = 50'
TRACK CIVIL	
TRACK CIVIL - GENERAL NOTES	NO SCALE
TRACK CIVIL - EXISTING TOPOGRAPHY AND DEMOLITION PLANS	1"=50'
TRACK CIVIL - TRACK ALIGNMENT - TYPICAL SECTIONS	1" = 10'
TRACK CIVIL - TRACK ALIGNMENT - KEY MAP	VARIES
TRACK CIVIL - TRACK ALIGNMENT - HORIZONTAL ALIGNMENT DATA TABLE	NO SCALE
TRACK CIVIL - TRACK ALIGNMENT - PLAN AND PROFILE	-
PLAN	1" = 50'
PROFILE	H: 1" = 50' ; V: 1"=10'
TRACK CIVIL - TRACK ALIGNMENT DETAILS	VARIES
TRACK CIVIL - GRADING AND DRAINAGE PLAN	1" = 50'
TRACK CIVIL - DRAINAGE SECTION AND DETAILS	VARIES
TRACK CIVIL - TEMPORARY WATER POLLUTION PREVENTION PLANS	1"=50'
TRACK CIVIL - TEMPORARY WATER POLLUTION PREVENTION DETAILS	VARIES
TRACK CIVIL - EROSION CONTROL PLANS	1"=50'
TRACK CIVIL - EROSION CONTROL DETAILS	VARIES
TRACK CIVIL - WATER POLLUTION PREVENTION PLANS	1"=50'
TRACK CIVIL - WATER POLLUTION PREVENTION DETAILS	VARIES
TRACK CIVIL - STAGE CONSTRUCTION PLAN	1"=100' 0R 1"=200'
TRACK CIVIL - STAGE CONSTRUCTION DETAILS	VARIES
TRACK CIVIL - TRAFFIC HANDLING PLAN	1"=100' 0R 1"=200'
TRACK CIVIL - TRAFFIC HANDLING DETAILS	VARIES
TRACKWORK	
TRACKWORK - GENERAL NOTES	NO SCALE
TRACKWORK - TRACK CHART	NO SCALE
TRACKWORK - MAINTENANCE-OF-WAY ACCESS PLAN	1" = 20'
TRACKWORK - MAINTENANCE-OF-WAY ACCESS DETAILS	VARIES

04/02/2014 - RFP No.: HSR13-57

TRACK STRUCTURES	
TRACK STRUCTURES - GENERAL NOTES	NO SCALE
TRACK STRUCTURES - KEY MAP	VARIES
TRACK STRUCTURES - INDEX MAP	VARIES
TRACK STRUCTURES - RETAINING WALL - PLAN AND PROFILE	-
PLAN	1" = 50'
PROFILE	H: 1" = 50' ; V: 1"=10'
TRACK STRUCTURES - RETAINING WALL - DETAILS	VARIES
TRACK STRUCTURES - TYPICAL SECTIONS (AERIAL/TUNNEL STRUCTURES)	1" = 10'
TRACK STRUCTURAL PLAN (AERIAL/TUNNEL STRUCTURES)	-
TOP OF RAIL	NO SCALE
ELEVATION	1" =20'
PLAN	1" = 20'
TRACK STRUCTURAL - GENERAL PLAN (SMALL STRUCTURES)	-
TOP OF RAIL	NO SCALE
ELEVATION	MATCH PLAN
PLAN	1" = 20' , 1" = 30 or 1" = 40' (DETERMINED BY SIZE OF STRUCTURE)
TYPICAL SECTION	1" = 10'
TRACK STRUCTURES - FOUNDATION PLAN	DETERMINED BY SIZE OF STRUCTURE
TRACK STRUCTURES - FOUNDATION DETAILS	VARIES
TRACK STRUCTURES - ABUTMENT PLAN AND ELEVATION	-
ELEVATION	MATCH PLAN
PLAN	DETERMINED BY SIZE OF STRUCTURE
TRACK STRUCTURES - ABUTMENT DETAILS	VARIES
TRACK STRUCTURES - PIER PLAN AND ELEVATION	-
ELEVATION	MATCH PLAN
PLAN	DETERMINED BY SIZE OF STRUCTURE
TRACK STRUCTURES - PIER DETAILS	VARIES
TRACK STRUCTURES - GIRDER DETAILS	DETERMINED BY SIZE OF STRUCTURE
TRACK STRUCTURES - GIRDER FRAMING PLAN	VARIES
TRACK STRUCTURES - BEARING DETAILS	VARIES
TRACK STRUCTURES - EXPANSION JOINT DETAILS	VARIES
TRACK STRUCTURES - DECK DRAINAGE DETAILS	VARIES
TRACK STRUCTURES - LOG OF TEST BORINGS	VARIES

04/02/2014 - RFP No.: HSR13-57

ROADWAY CIVIL (See Note 2)**	
ROADWAY CIVIL - GENERAL NOTES	NO SCALE
ROADWAY CIVIL - INDEX MAP	VARIES
ROADWAY CIVIL - EXISTING TOPOGRAPHY AND DEMOLITION PLANS	1"=50'
ROADWAY CIVIL - TYPICAL SECTIONS	1" = 10'
ROADWAY CIVIL - GRADE SEPARATION - "STREET NAME"	-
PLAN	1" = 50'
PROFILE	H: 1" = 50' ; V: 1"=10'
TYPICAL SECTION	1" = 10'
ALIGNMENT CURVE DATA	NO SCALE
RETAINING WALL (ID, LENGTH, AVERAGE HEIGHT)	NO SCALE
ROADWAY CIVIL - GRADING AND DRAINAGE PLAN	1" = 50'
ROADWAY CIVIL - DRAINAGE SECTION AND DETAILS	VARIES
ROADWAY CIVIL - TEMPORARY WATER POLLUTION PREVENTION PLANS	1"=50'
ROADWAY CIVIL - TEMPORARY WATER POLLUTION PREVENTION DETAILS	VARIES
ROADWAY CIVIL - EROSION CONTROL PLANS	1"=50'
ROADWAY CIVIL - EROSION CONTROL DETAILS	VARIES
ROADWAY CIVIL - WATER POLLUTION PREVENTION PLANS	1"=50'
ROADWAY CIVIL - WATER POLLUTION PREVENTION DETAILS	VARIES
ROADWAY CIVIL - STAGE CONSTRUCTION PLAN	1"=100' 0R 1"=200'
ROADWAY CIVIL - STAGE CONSTRUCTION DETAILS	VARIES
ROADWAY CIVIL - TRAFFIC HANDLING PLAN	1"=100' 0R 1"=200'
ROADWAY CIVIL - TRAFFIC HANDLING DETAILS	VARIES
ROADWAY CIVIL - SIGN PLANS	1"=50'
ROADWAY CIVIL - SIGN DETAILS	VARIES
ROADWAY STRUCTURES (See Note 2)**	
ROADWAY STRUCTURES - GENERAL NOTES	NO SCALE
ROADWAY STRUCTURES - GENERAL PLAN	-
PROFILE GRADE	NO SCALE
ELEVATION	MATCH PLAN
PLAN	1" = 20' , 1" = 30 or 1" = 40' (DETERMINED BY SIZE OF STRUCTURE)
TYPICAL SECTION	1" = 10'
RETAINING WALL (ID, LENGTH, AVERAGE HEIGHT)	NO SCALE
ROADWAY STRUCTURES - FOUNDATION PLAN	DETERMINED BY SIZE OF STRUCTURE
ROADWAY STRUCTURES - FOUNDATION DETAILS	VARIES
ROADWAY STRUCTURES - ABUTMENT PLAN AND ELEVATION	-
ELEVATION	MATCH PLAN
PLAN	DETERMINED BY SIZE OF STRUCTURE

04/02/2014 - RFP No.: HSR13-57

ROADWAY STRUCTURES - ABUTMENT DETAILS	VARIES
ROADWAY STRUCTURES - PIER PLAN AND ELEVATION	-
ELEVATION	MATCH PLAN
PLAN	DETERMINED BY SIZE OF STRUCTURE
ROADWAY STRUCTURES - PIER DETAILS	VARIES
ROADWAY STRUCTURES - GIRDER FRAMING PLAN	DETERMINED BY SIZE OF STRUCTURE
	VARIES
ROADWAY STRUCTURES - BEARING DETAILS	VARIES
ROADWAY STRUCTURES - EXPANSION JOINT DETAILS	VARIES
ROADWAY STRUCTURES - DECK CONTOURS	DETERMINED BY SIZE OF STRUCTURE
ROADWAY STRUCTURES - DECK DRAINAGE DETAILS	VARIES
ROADWAY STRUCTURES - LOG OF TEST BORINGS	VARIES
UTILITIES	
UTILITIES - GENERAL NOTES	NO SCALE
UTILITIES - KEY MAP	VARIES
UTILITIES - UTILITY COMPOSITE PLAN - ALONG TRACK ALIGNMENT	1" =50'
FOR EXISTING, PROPOSED AND RELOCATED UTILITIES	
UTILITIES - UTILITY COMPOSITE PLAN - AT ROADWAYS	1" = 50'
FOR EXISTING, PROPOSED AND RELOCATED UTILITIES	-
UTILITIES - UTILITY PROTECTION & RELOCATION PLAN AND PROFILE	-
FOR HIGH RISK UTILITIES AND AT CRITICAL AREAS, PINCH POINTS AS NEEDED	-
PLAN	1" = 50'
PROFILE	H: 1" = 50' ; V: 1"=10'
UTILITY DETAILS	VARIES
TRACTION POWER	
TRACTION POWER - GENERAL NOTES	NO SCALE
TRACTION POWER - KEY MAP	VARIES
TRACTION POWER - UNDERTRACK DUCT BANK PLAN	-
FOR UNDERTRACK DUCT BANKS AND MANHOLES LOCATIONS	-
PLAN	1" = 20'
PROFILE	H: 1" = 20' ; V: 1"=10'
TRACTION POWER - GROUNDING AND BONDING TYPICAL SECTIONS	1" = 10'

** NOTE 1:*
PLANS VARY BY CONTRACT SUBMITTALS. CONTRACTOR SHALL MAINTAIN A CONSTRUCTION DRAWING LIST AND SHALL BE AVAILABLE UPON REQUEST.

*** NOTE 2:*
ROADWAY CIVIL AND STRUCTURAL PLANS UNDER STATE OR THIRD PARTY JURISDICTION SHALL FOLLOW CALTRANS OR THIRD PARTY STANDARDS

04/02/2014 - RFP No.: HSR13-57

2.5.4 PROJECT PLAN FILE FORMAT

The drawing file format for the project shall be DGN only. Any file that is created in DWG or DXF format must be converted into DGN using the correct seed files, levels and symbology. See Section 1.3.7 of the CHSTP CADD Manual for electronic copies deliverable information. See Section 2.10 of the CHSTP CADD Manual for project seed file information. See Section 4.0 of the CHSTP CADD Manual for level and symbology requirements.

2.6 USE OF STANDARD AND DIRECTIVE DRAWINGS

Standard and Directive Drawings supplement the contract drawings and assist in the design of the contract work. Standard and Directive drawings are approved details and design guidance by the Authority that are applicable to the construction of track, system, and civil facilities.

Standard and Directive Drawings are divided into categories by an alpha prefix and level 1 discipline code. The file naming convention, which matches the drawing number, is shown below:

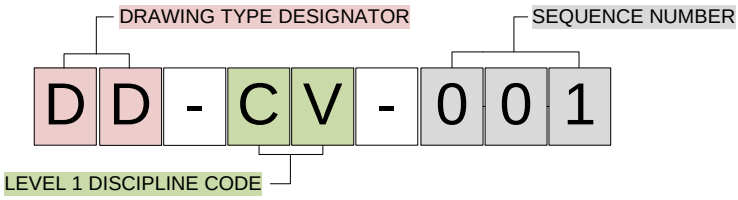

Example:

Directive Drawings, Civil, Sequence number 001

Drawing Type Designator

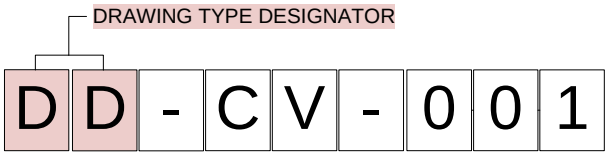

There are two drawing types – DD and SD. DD stands for Directive Drawing and SD stands for Standard Drawing. See Section 1.3 of this Manual for more detailed definitions of the standard and directive drawings.

04/02/2014 - RFP No.: HSR13-57

Level 1 Discipline Code

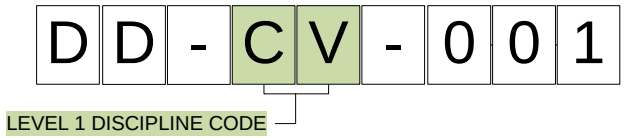

The 3rd and 4th characters are the discipline codes. Most are inclusive of the discipline codes defined in Appendix C of the CHSTP CADD Manual. The discipline codes for the standard and directive drawings are as follows:

AR - Architecture

CD – Drainage

CO – Communications

CV – Civil

GE- General

IP – Intrusion Protection

OC – Overhead Contact System

ST – Structures

SY – Systems

TC – Train Control

TN – Tunnels

TP – Traction Power

TT – Track

UT – Utility

VS – Survey

Do not include the drawing of a standard detail in a drawing submittal as it is already shown on a CHSTP Standard Drawing. The contract drawings need only to callout the name and drawing number of the particular standard detail. Unsigned DGNs for the standard drawings shall be made available if the standard detail needs to be modified and included in the plan set. Only the individual modified detail, not the entire standard drawing itself, shall be included in the project plan. The contract drawings containing individual modified details (s) from any CHSTP Standard Drawing shall be signed by the licensed engineer designated on the project plan. If only minimal modifications are made to the standard detail, show the modification only with a reference back to the applicable standard drawings. Any modified details shown on contract drawings shall be labeled “MODIFIED” as shown below

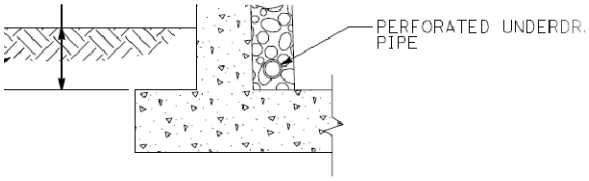

RETAINING WALL DRAINAGE (MODIFIED)

04/02/2014 - RFP No.: HSR13-57

3.0 FACILITY NAMING CONVENTIONS

The following facilities naming convention shall be used for Preliminary Engineering for Procurement Design deliverables and all construction drawings. The naming convention provides consistency for CHSTP facilities throughout the entire project. See Appendix A of this Manual for Facility Naming Convention Summary Table

3.1 SUBDIVISIONS

It is standard U.S. railroads practice that large track systems are traditionally divided into manageable sections called branches or subdivisions. This is vital in enabling the location of trains, physical plant and assets, and to define right-of-way maintenance sections.

It is proposed that the CHSTP be apportioned into seven “subdivisions”. A single alpha character shall used to identify each subdivision:

B	Bay Subdivision	–	Extends from San Francisco to CP Divide
S	Sierra Subdivision	–	Extends from CP Divide to Bakersfield
D	Desert Subdivision	–	Extends from Bakersfield to Los Angeles
T	Tongva Subdivision	–	Extends from Los Angeles to Anaheim
C	Capitol Subdivision	–	Extends from CP Divide to Sacramento
J	San Jacinto Subdivision	–	Extends from CP Inland Junction to San Diego
P	Pacheco Subdivision	–	Extends from CP San Joaquin to CP Merced

3.2 MILEPOSTS

In accordance with the majority of U.S. railroads, the “initial” mile post (MP) on the system is designated 0.0 beginning at the initial subdivision.

It is proposed that the CHSTP’s, Bay Subdivision begin at milepost 0.0 in San Francisco prefixed with the initial letter designation of the subdivision where the milepost is located. It is further proposed that all subsequent high-speed corridor extensions (links to Sacramento and San Diego) begin at the milepost located at the junction where the extensions connect to the primary corridor “spine” of San Francisco-Los Angeles-Anaheim, and increasing mileposts from North to South. Refer to Figure 1.

3.3 STATIONING

The southbound HST track centerline shall be the control line for stationing; begin at station 100+00, at milepost 0.0 in San Francisco increasing towards the south to Anaheim. Further, the Capitol, San Jacinto and Pacheco Subdivisions will increase north to south. In order to differentiate the stationing, the single alpha character subdivision identifier shall be added as a prefix, **X###+##.**

Example:

Bay Subdivision track stationing at CP Merced **B8100+00**

Pacheco Subdivision track stationing at CP Merced **P8300+00**

04/02/2014 - RFP No.: HSR13-57

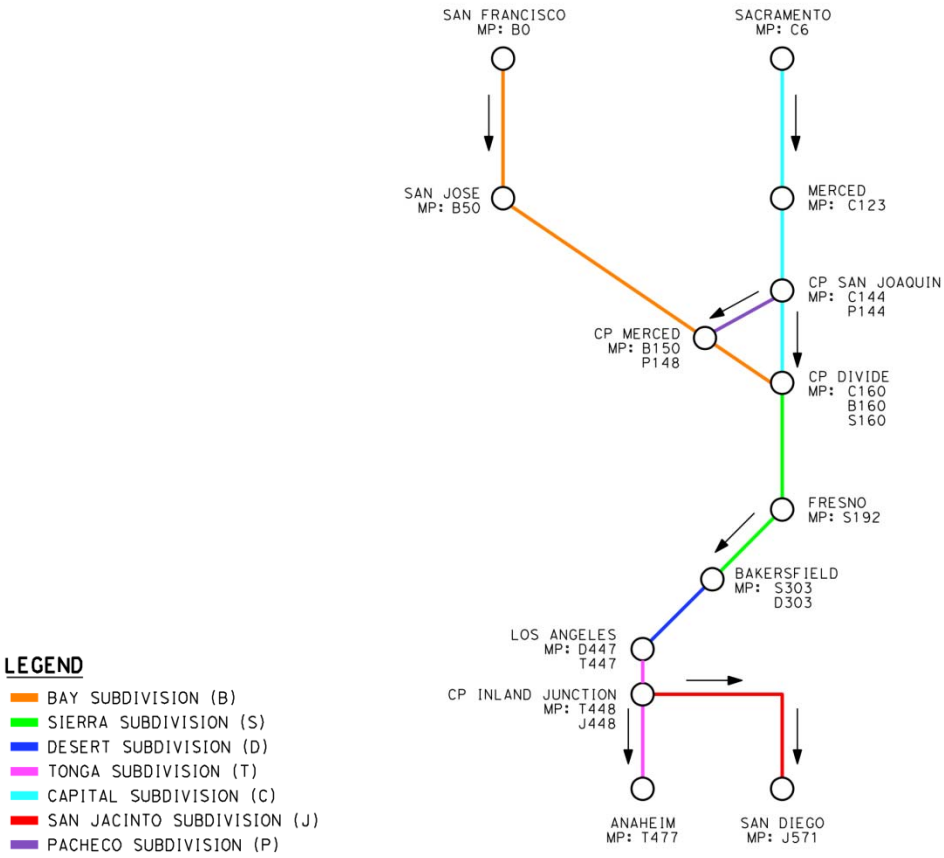

	Milepost (1)		Stationing (1)	
	Approx.	**Equality**	**Approx.**	**Equality**
San Francisco	B0		B100+00	
San Jose	B50		B2800+00	
CP Merced	B150	P148	B8100+00	P8300+00
CP Divide	B160	C160 S160	B9000+00	C9000+00 S9000+00
Fresno	S192		S11000+00	
Bakersfield	S303	D303	S17000+00	D17000+00
Los Angeles	D447	T447	D23710+00	T23710+00
CP Inland Junction	T448	J448	T23760+00	J23760+00
Anaheim	T477		T26000+00	
Sacramento	C6		C500+00	
Merced	C123		C7000+00	
CP San Joaquin	C144	P144	C8000+00	P8000+00
San Diego	J571		J31000+00	

Milepost and Stationing is approximate and has been provided as reference, it should be confirmed by Regional Consultant Teams.

Figure 1 – Milepost and Stationing

04/02/2014 - RFP No.: HSR13-57

3.4 STATIONING AND TERMINALS

- Identify HST Stations and Terminals using the convention **X-[NAM]-S** or **X-[NAM]-T** where,

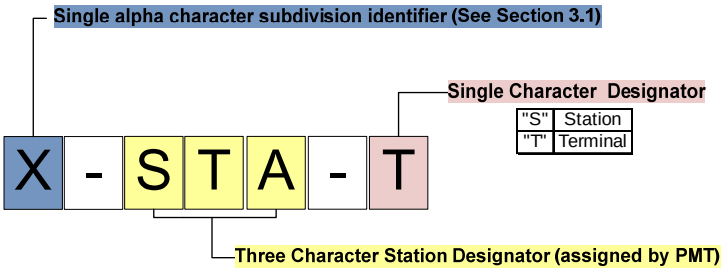

AFB	March AFB
ANA	Anaheim
BAK	Bakersfield
COR	Corona
ESC	Escondido
FRE	Fresno
GIL	Gilroy
KTR	Kings/Tulare Regional
LOS	Los Angeles
MER	Downtown Merced
MOD	Downtown Modesto
MPE	Mid-Peninsula
NSF	Norwalk/ Santa Fe Springs or Fullerton
ONT	Ontario Airport
PAL	Palmdale
RIV	Riverside
SAC	Sacramento
SAD	San Diego
SAF	San Francisco
SBB	San Bernando/Branford/Burbank
SFO	Millbrae-SFO
SGV	San Gabriel Valley
SJD	San Jose Diridon
STO	Stockton
TEM	Temecula/Murrieta

Example:

Sierra Subdivision, Fresno Station: **S-FRE-S**

Capital Subdivision, Sacramento Terminal: **C-SAC-T**

- Non HST Stations (through Stations) keep original name.

Example:

Caltrain Station: **Burlingame Station**

04/02/2014 - RFP No.: HSR13-57

- Infrastructure and System Elements at stations are identified by **X-[NAM]-[ELEMENT](##),** where,

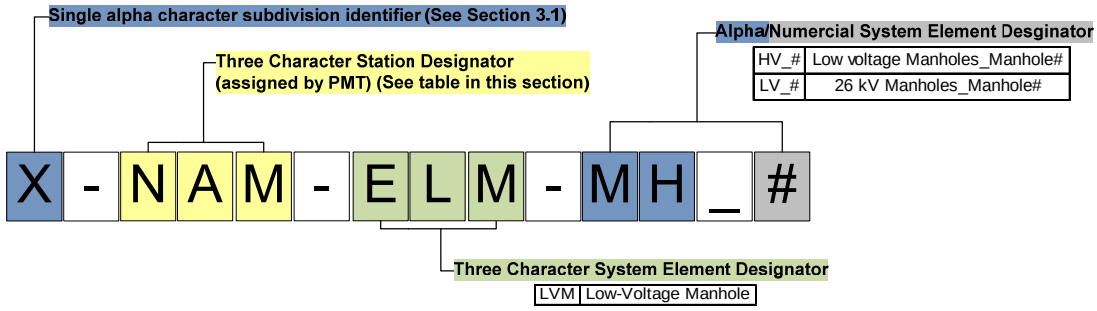

Example:

Sierra Subdivision, Fresno Station**, Low-Voltage Manhole number 1: S-FRE-LVM01**

3.5 TRACK

Mainline HST Tracks shall be identified by **X[#],** a two–character reference,: an alpha character followed by a numeric, where,

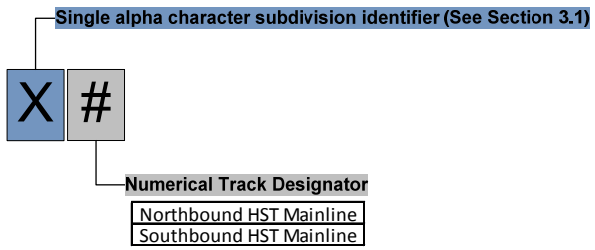

Where there are more than two HST tracks (e.g. Stations) the additional tracks are numbered on a site specific basis, using odd numbers for northbound and even numbers for southbound.

Example:

Sierra Subdivision SB tracks **S2, S4**

Bay Subdivision NB tracks **B1, B3**

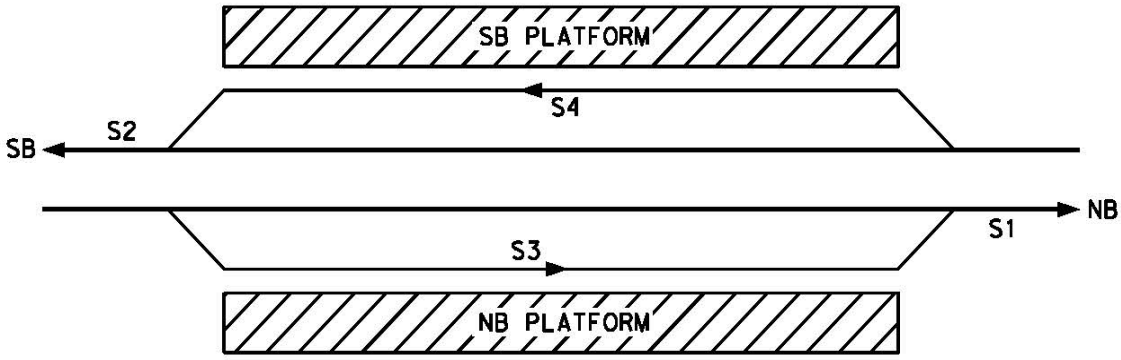

Figure 2 – Station Tracks

04/02/2014 - RFP No.: HSR13-57

Terminal tracks shall be identified by **X-[NAM]-T-##,** where

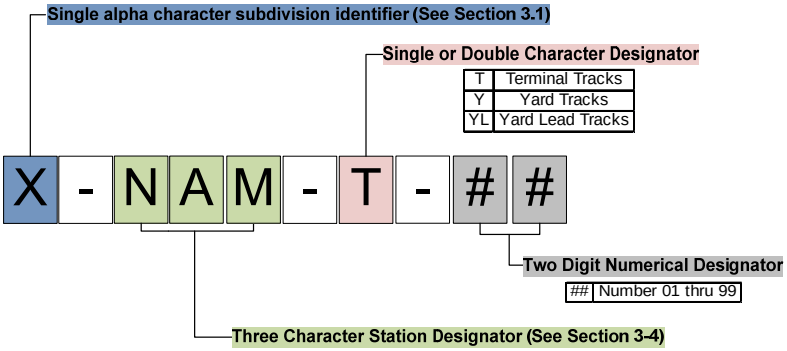

Example:

Bay Subdivision, San Francisco Terminal tracks: **B-SAF-T-01, B- SAF-T-02**

Bay Subdivision, San Francisco Storage Yard tracks: ***B*-SAF-*Y-01, C*-SAF-*Y-02***

Bay Subdivision, San Francisco Storage Yard lead tracks: **B-SAF--*YL1*, *C-SAY-YL2***

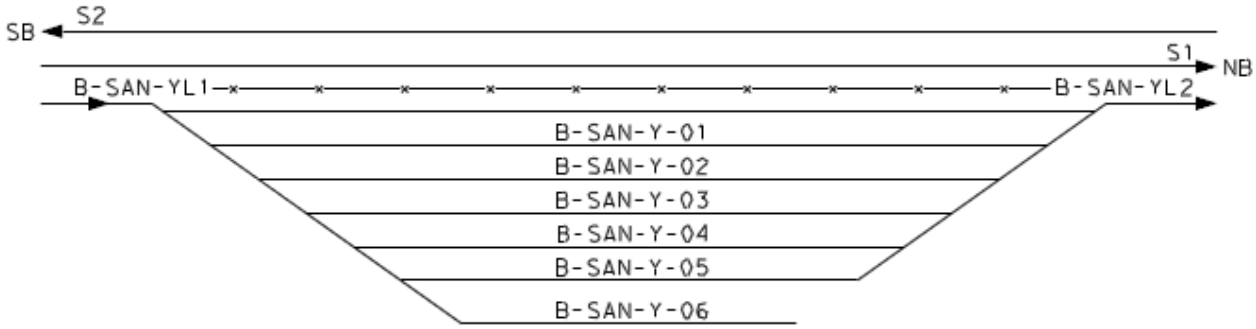

Figure 3 – Yard Tracks

3.6 INTERLOCKING

Identify intermediate interlocking using the convention **X-INT-[NAM],** where,

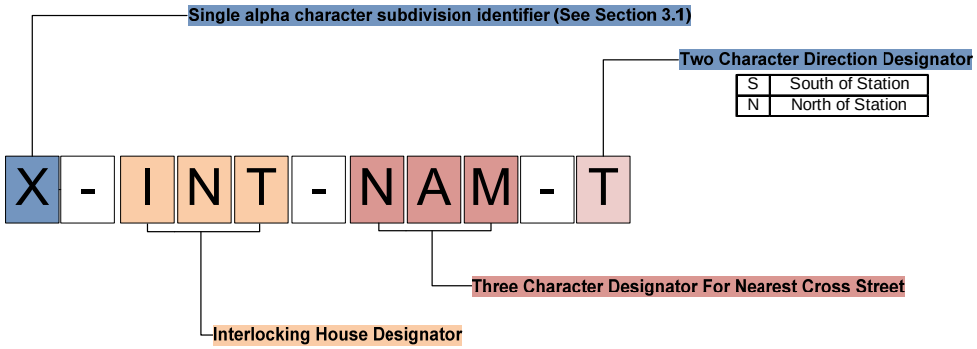

04/02/2014 - RFP No.: HSR13-57

For Station interlocking, add a suffix to the above convention

Example:

Sierra Subdivision interlocking near Flore Street ***S-INT-FLO***

Sierra Subdivision station interlocking south of station ***S-INT-FLO-S***

3.7 ELEMENTS DESIGNATOR

3.7.1 SURVEY CONTROL MONUMENTS

Identify Survey Control Monuments using the convention **X####P** where,

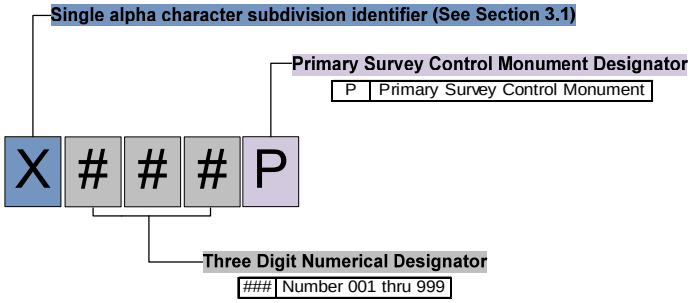

Example:

Primary Survey Control Monument in Bay Subdivision **B204P**

3.7.2 ACCESS ROADWAY

Identify Access Roadways using the convention **X-[NAM]-(#)** where,

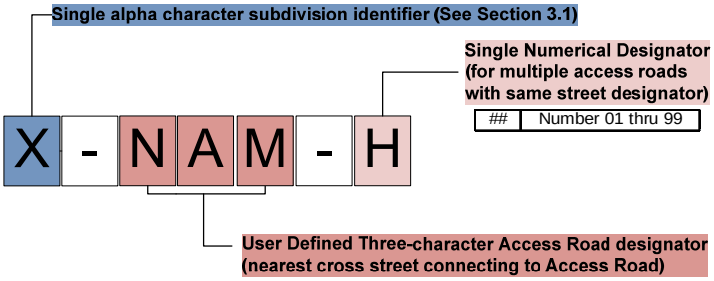

Example:

Sierra Subdivision access road from Flore Street, ***S-FLO***

Sierra Subdivision fifth access road from Camino Real, ***S-CAM-5***

04/02/2014 - RFP No.: HSR13-57

Temporary Roadways will use the same Access Roadways identifier but will have a **"T"** suffix.

Example:

Sierra Subdivision temporary access road from Second Street, ***S-SEC-T***

Sierra Subdivision second Temporary access road from Third Avenue***, S-THI-2-T***

04/02/2014 - RFP No.: HSR13-57

3.7.3 MAINTENANCE / ACCESS GATES

Identify Maintenance / Access Gates using the convention **X-MW[1]/[2] -[NAM]-(#)** where,

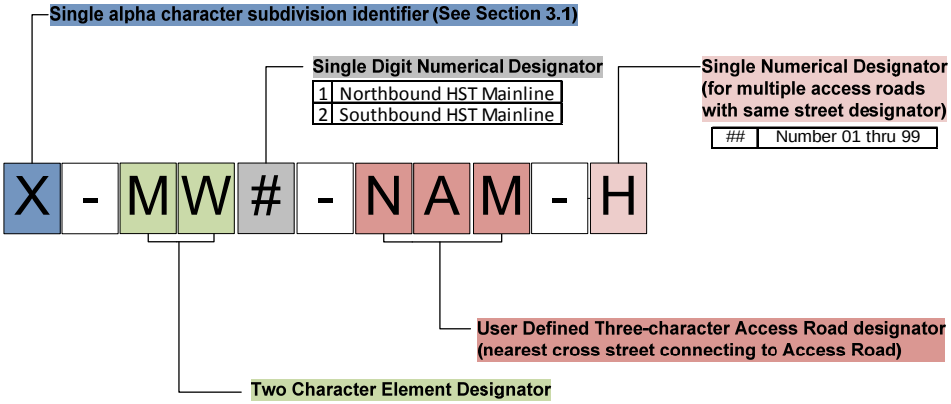

Example:

Sierra Subdivision, 1st Maintenance Gate nearest to Flora Street: ***S-MW2-FLO***

Sierra Subdivision, 1st Maintenance Gate nearest to Flora Street: ***S-MW1-CAM-2***

3.7.4 PLATFORMS

- Identify HST Stations Side Platforms using the convention **X-[NAM]-[1]/[2]** where,

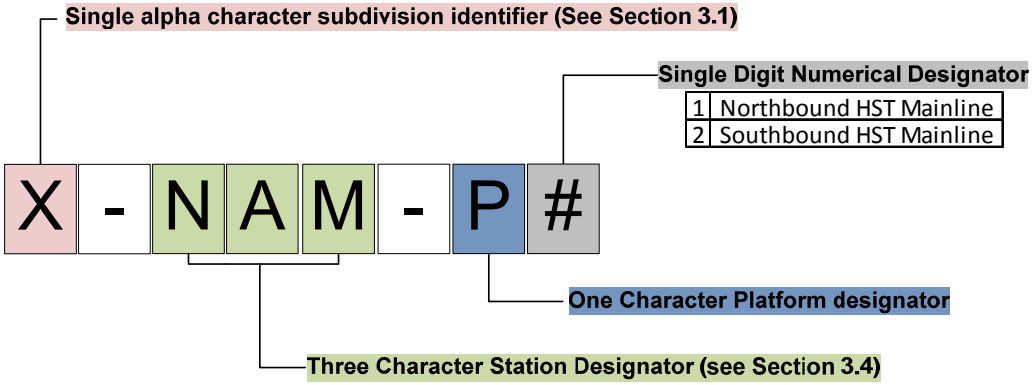

Example:

Sierra Subdivision Fresno Station southbound side platform, ***S-FRE-P1***

04/02/2014 - RFP No.: HSR13-57

Identify HST Stations Center and Terminal Platforms using the convention **X-[NAM]-##** where,

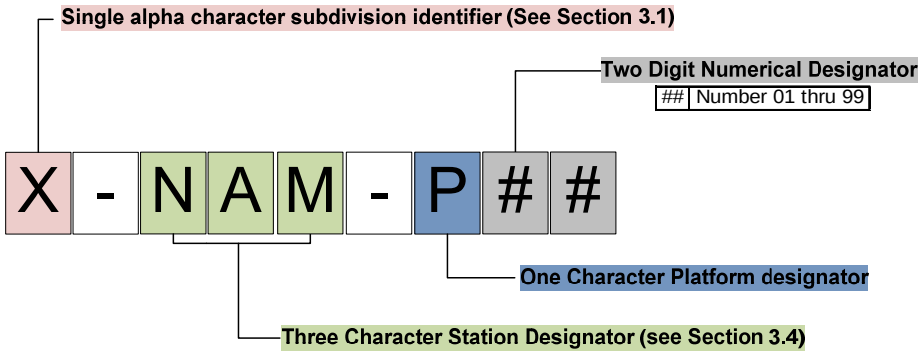

Example:

Station along Sierra Subdivision with Center platform at ***S-FRE-P01***

Terminal Platforms at Transbay ***B-TRA-P04***

3.7.5 GRADE SEPARATED STRUCTURES

Identify grade separated structures using the convention **X-{EL}-mp** where,

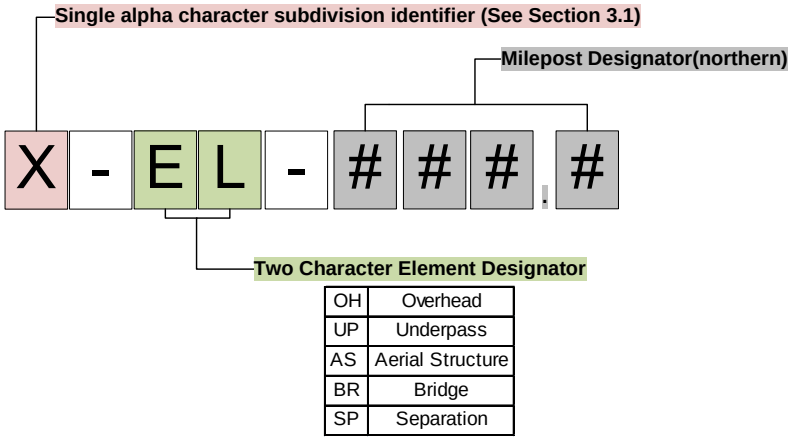

For multi or split structures, add a suffix to the above convention **X-{EL}-mp-[1]/[2]** where,

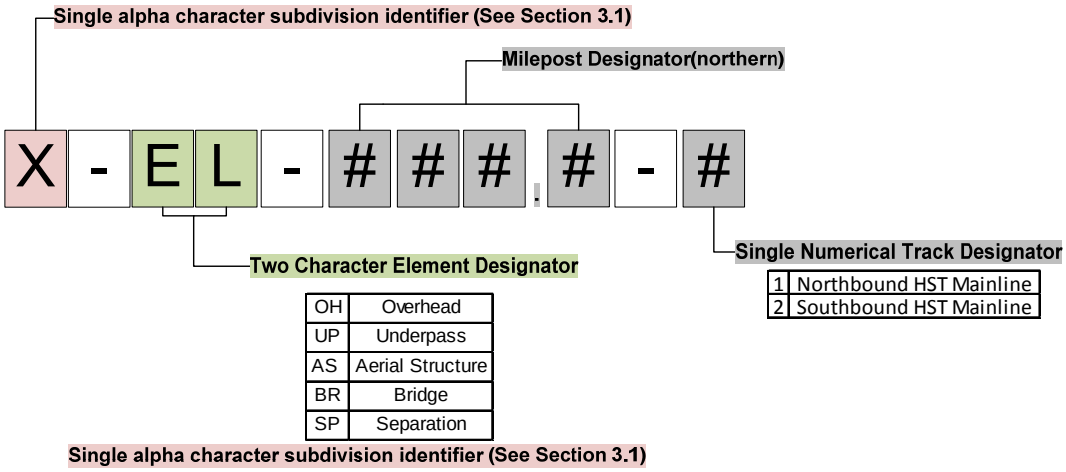

04/02/2014 - RFP No.: HSR13-57

For identifying HST Structure piers and bents, add a two-digit suffix to the above convention **X-{EL}-mp-##** or **X-{EL}-mp-[1]/[2]-##** where,

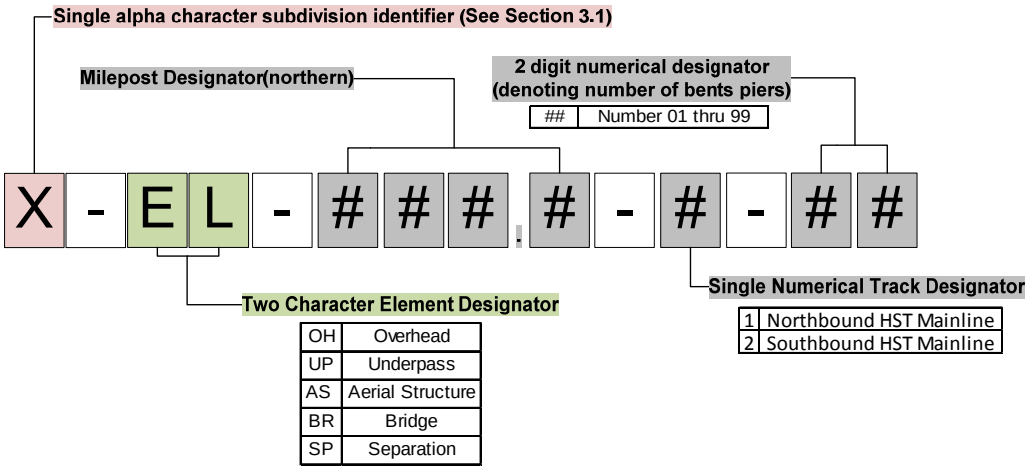

Note: A Grade Separated Structure may also have a BIN name given by the owner of the structure**.**

04/02/2014 - RFP No.: HSR13-57

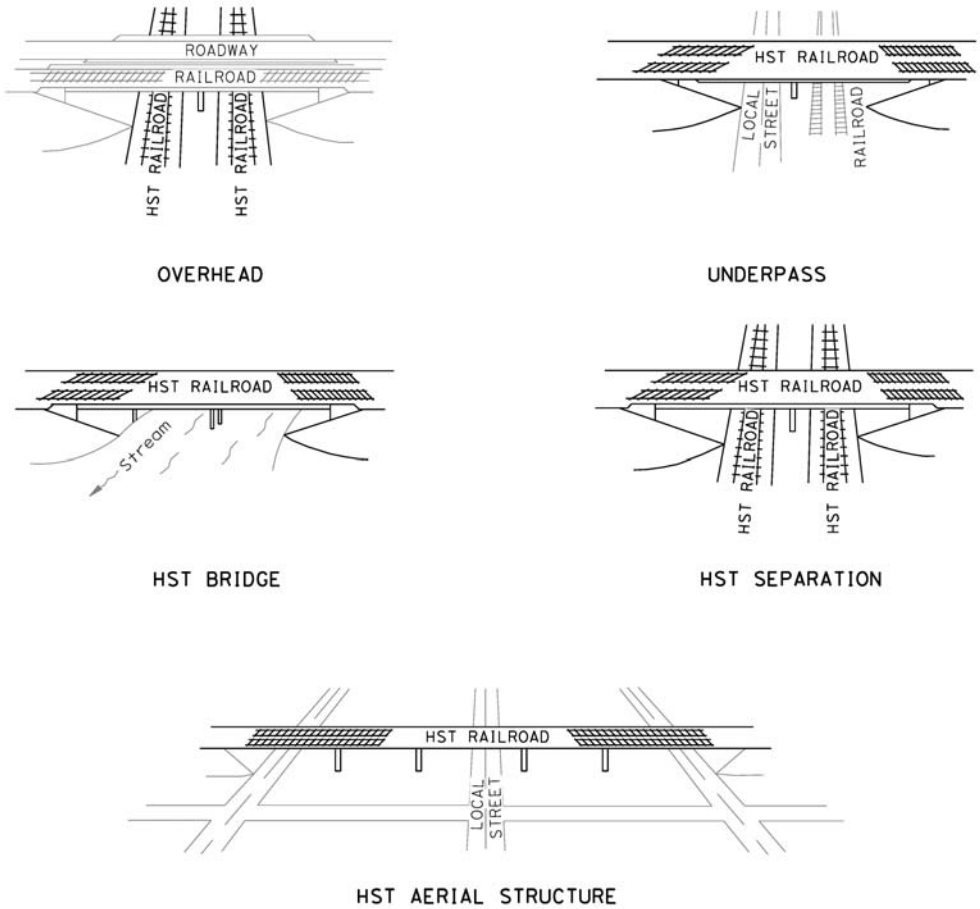

FOR ROADWAY STRUCTURE NOMENCLATURE
REFER TO STRUCTURE TYPES DEFINED IN CALTRANS HIGHWAY DESIGN MANUAL

Figure 4 – Grade Separated Structure Types

Example:

Grade separated structures on Sierra Subdivision.

Overhead:	***S-OH -170.2***	Underpass:	***S-UP-175.5***
HST Aerial Structure:	***S-AS-180.51***	HST Bridge:	***S-BR-172.5***
HST Separation:	***S-SP-176.8***	Piers/bents:	***S-AS-187.5-05***

04/02/2014 - RFP No.: HSR13-57

3.7.6 TUNNELS / UNDERGROUND STRUCTURES

- Identify tunnel using the convention **X-TS[1]/[2]-mp-(n)** where,

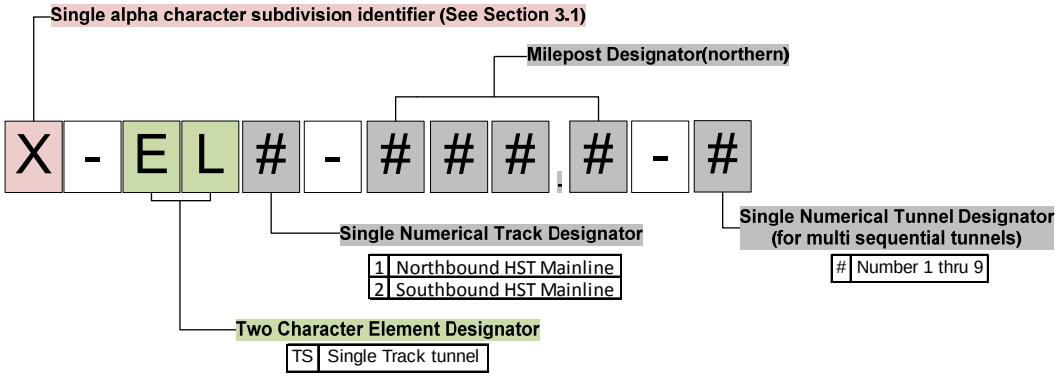

Example:

Bay Subdivision northbound single track tunnel, ***B-TS1-66.5***

- For tunnel infrastructure elements, add a suffix to the above convention using the convention **X-TS[1]/[2]-mp)-(n)-{EL}** where,

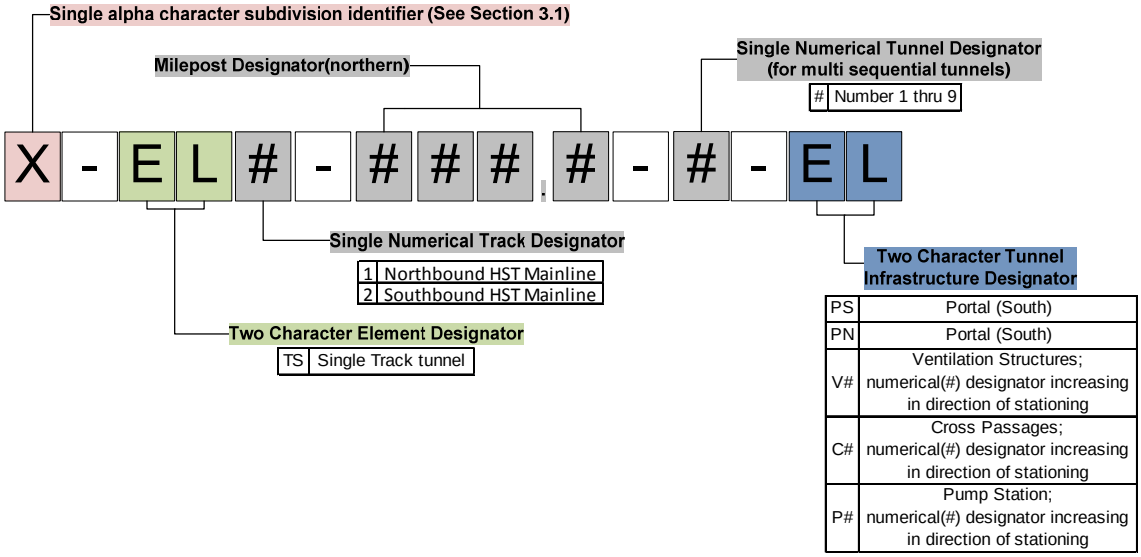

Example:

Bay Subdivision northbound single track tunnel - ***B-TS1-66.5***

North Portal - ***B-TS1-66.5-PN***

1st Ventilation Structures - ***B-TS1-66.5 -V1***

2nd Cross Passages - ***B-TS1-66.5-C2***

04/02/2014 - RFP No.: HSR13-57

1st Pump Station - ***B-TS1-66.5-P1***

3.7.7 BUILDINGS

- Operation Control Centers

  Identify Operation Control Centers using the convention **X-OCC-#** where,

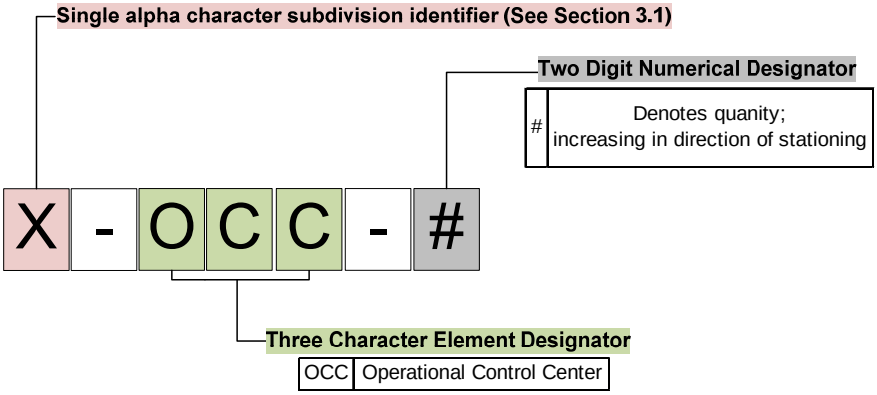

Example:

Capital Subdivision 2nd Operational Control Center ***C-OCC-2***

3.7.8 WALLS(1)

Identify walls using the convention **X-{EL}[1]/[2]-mp** where,

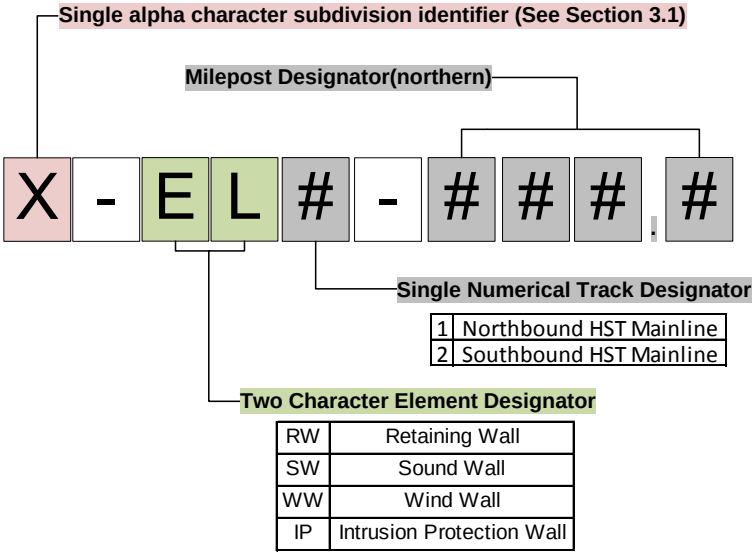

Example:

Walls located along Sierra Subdivision NB HST Track:

04/02/2014 - RFP No.: HSR13-57

Retaining Wall ***S-RW1-188.4***

Sound Wall ***S-SW1-172.5***

Wind Wall ***S-WW1-280.4***

Intrusion Protection Wall ***S-IP1-300.7***

(1) Includes Retained cut, Retained Fill, and Trenches

3.7.9 TRACTION POWER

Identify Traction Power facilities according to the convention **X-{TYPE}-[NAM]** where,

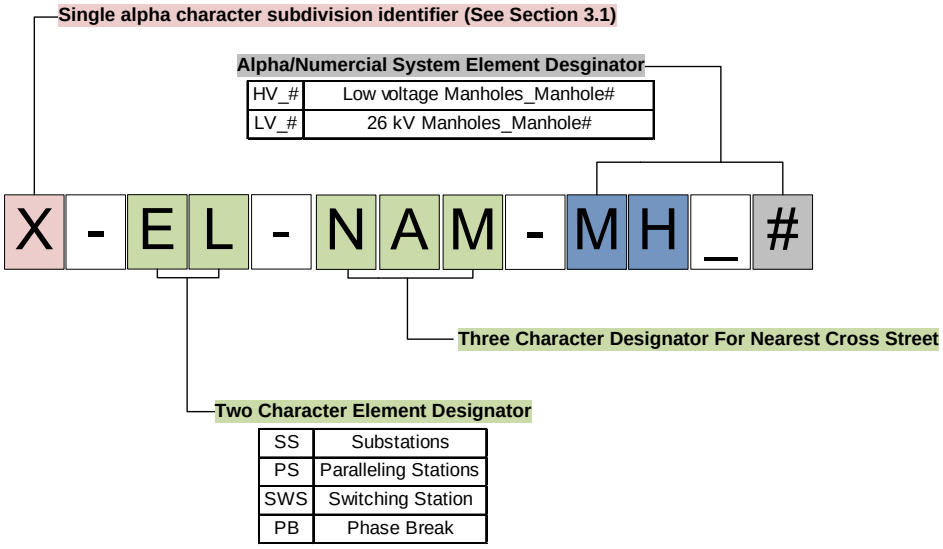

Example:

S-SS-FLO

04/02/2014 - RFP No.: HSR13-57

3.7.10 POWER UTILITY COMPANY / HV ELECTRICAL POWER CONNECTIONS

- Identify Utility Switching Stations according to the convention **X-{TYPE}-[NAM]-USW** where,

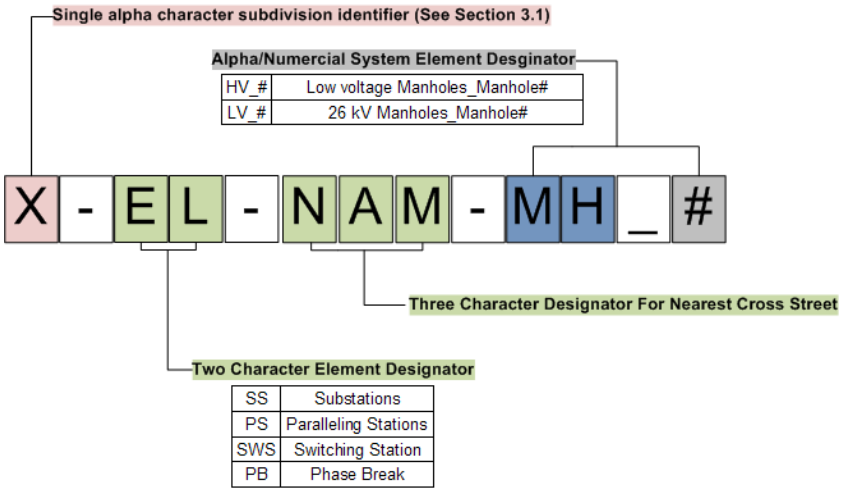

- For HV Connection - tie, add a suffix to the above convention using the convention **X-{TYPE}-[NAM]-USW-HV[kV###]** where,

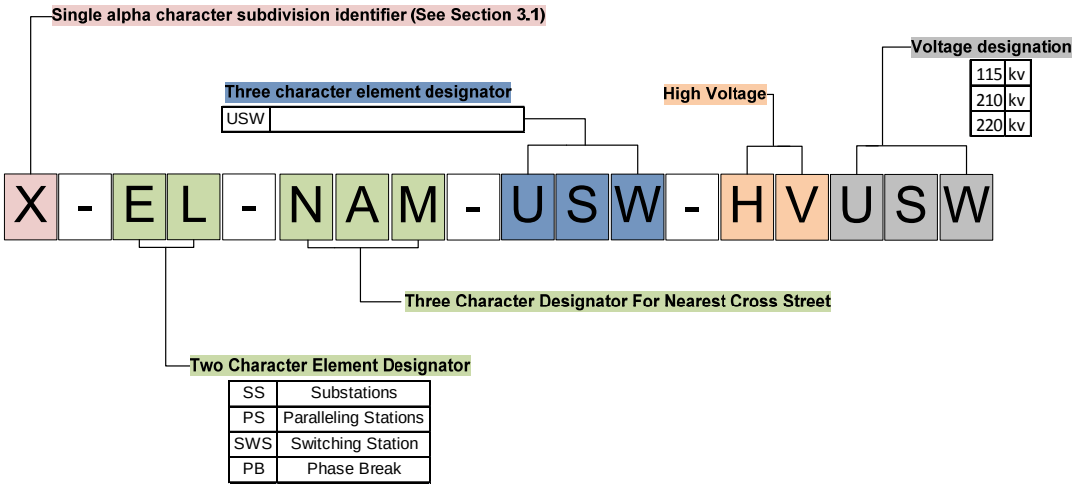

Example:

S-SS-FLO-USW and ***S-SS-FLO-USW-HV115***

04/02/2014 - RFP No.: HSR13-57

3.7.11 OVERHEAD CONTACT SYSTEM

- Identify the OCS Catenary wire run tensioning sections according to the convention **X-OCS-W-###** where,

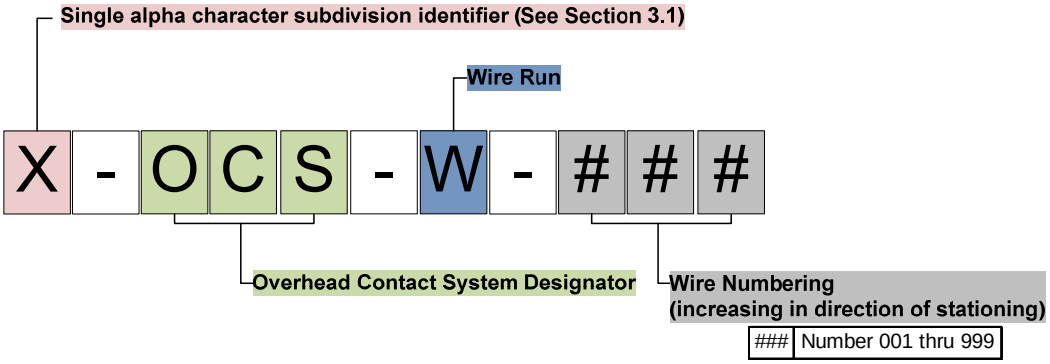

Example:

Bay Subdivision OCS Wire run No. 12***, B-OCS-W-012***

3.7.12 TRAIN CONTROL

Intermediate Crossovers Interlockings

- Identify Interlocking facilities according to the convention **X-INT-[NAM]** for master interlocking houses and **X-INT-[NAM]-#(S/N)** for satellite interlocking houses within the same interlocking, where:

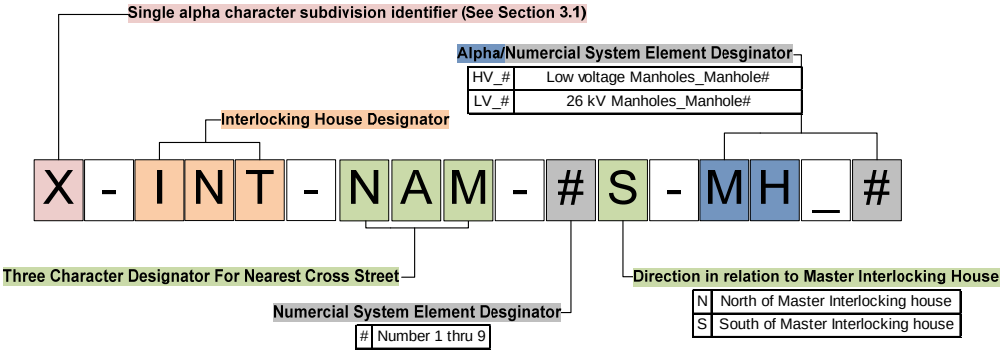

Example:

Master Interlocking house of the intermediate crossovers nearest to Flora Street***, S-INT-FLO***

1st satellite interlocking house north of Master Interlocking house of the intermediate crossovers nearest to Flora Street ***, S-INT-FLO-1N***

04/02/2014 - RFP No.: HSR13-57

Station Interlockings

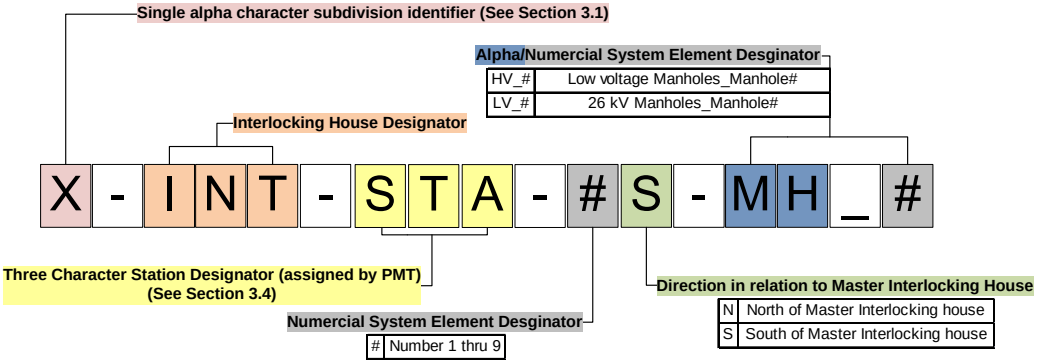

Example:

Fresno Station Master Interlocking house, south side of the station***, S-INT-FRE-S***

1st satellite interlocking house north of Fresno Station Master Interlocking house, south side of the station, ***S-INT-FRE-S-1N***

04/02/2014 - RFP No.: HSR13-57

3.7.13 COMMUNICATIONS

- Co-located Communications Radio Tower and shelters co-located with SystemsFacilities

  Identify Communication Equipment at Traction Power Facilities according to the convention

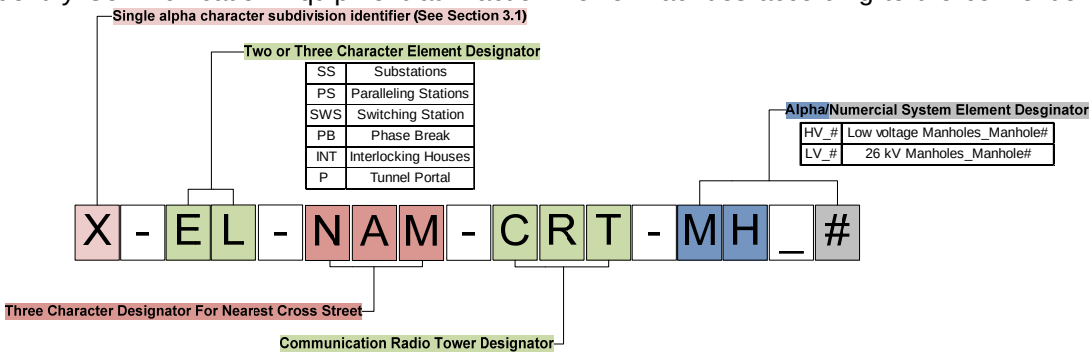

Example:

Sierra Subdivision, Substation Communication Radio Tower nearest to Flora Street***, S-SS-FLO-CRT***

- Standalone Radio Sites

  Identify Standalone Radio Sites and SRS Equipment according to the convention **X-SRS-[NAM]-RT** where,

X:	Subdivision name
SRS:	Standalone Radio Site
[NAM]:	Three-character designator for nearest Street
RT:	Two-character element designator

Example:

Sierra Subdivision, Substation Standalone Radio Sites nearest to Flora Street **S-SRS-FLO-RT**

3.7.14 MAINTENANCE FACILITY

04/02/2014 - RFP No.: HSR13-57

Identify Maintenance Facility using the convention **X-{Type}-[NAM]** where,

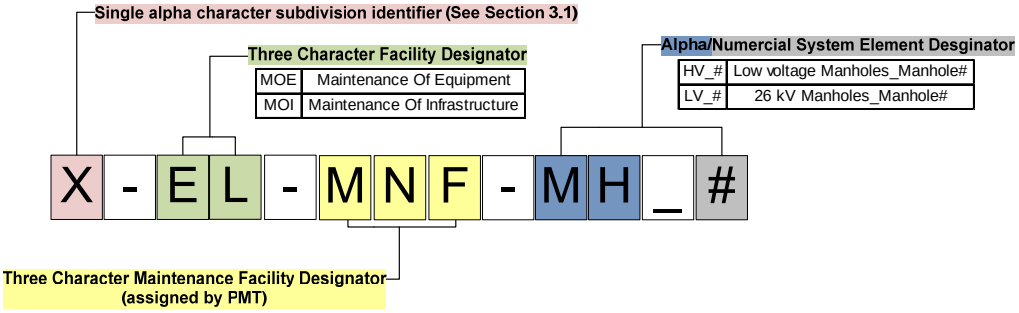

Example:

Bay Subdivision Maintenance of Equipment Facility ***B-MOE-GEN***

04/02/2014 - RFP No.: HSR13-57

4.0 CONSTRUCTION DRAWINGS

4.1 CONSTRUCTION DRAWING SUBMITTALS

Construction drawings furnished by the contractor represent the post-preliminary design project delivery, from proposed design through completion of construction. Construction drawings submittals can be categorized into three (3) types – Design Submittal drawings, Ready for Construction (RFC) and As-Built drawings. The below graphic indicates the construction drawing workflow:

Construction Drawing Workflow

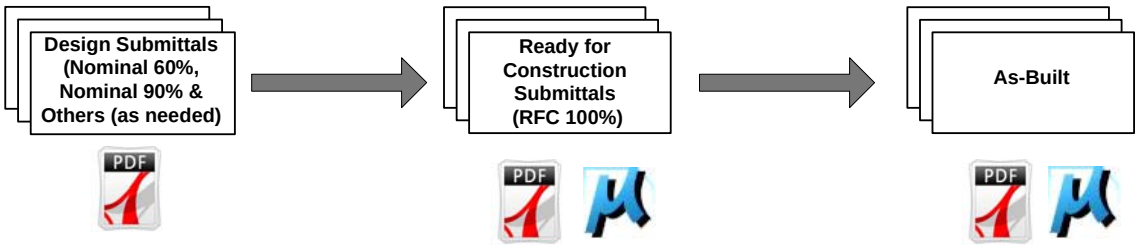

4.1.1 CONSTRUCTION DRAWING SUBMITTAL REQUIREMENTS

The CHSTP management team has established SharePoint and ProjectWise as its primary electronic document managements system for construction drawings submittals. All drawings submitted to the Authority shall be in the following formats:

- Design Submittals (Nominal 60%, Nominal 90% and Others): PDF
- Ready for Construction (RFC) Drawings: PDF and DGN
- As-Built: PDF and DGN

For hard copy and electronic “soft” copy deliverables requirements, see Section 1.3.6 and 1.3.7 of the CHTSP CADD Manual.

4.1.2 SIGN AND SEAL REQUIREMENTS

Ready for Construction (RFC) drawings shall be signed and sealed by a licensed California professional engineer. Sign and seal information shall be placed in the stamp area of the titleblock, as indicated by Section 2.4.3 of this Manual.

4.2 AS-BUILT DRAWINGS

As-Built drawings are the original RFC drawings that have been updated showing changes that occurred during the course of construction. As-built drawings are mandatory for accurately recording the final field conditions at the completion of the contract.

04/02/2014 - RFP No.: HSR13-57

4.2.1 AS-BUILT DRAWING PROCEDURES

Any changes made during design in the form of contract change orders and/or field changes according to his/her redlined field corrections shall be conformed into one record as-built drawing. Revisions shall be made directly on the Ready for Construction (RFC) drawings in DGN format. When completing the As-Built drawings, the following procedures shall be followed to incorporate corrections:

- As-Built corrections shall be on Level 62 AsBuilt Chng
- Each As-built drawing must be clearly identified with an As-built stamp, as defined in Section 4.2.2 of this Manual.
- Superseded information must remain legible and shall not be deleted. Instead, denote changes by striking through the original information.
  Strikethrough linework: LW=1, LV=62
- To differentiate the correction information from the contents shown on the RFC drawings, text shall be larger than the original information and show in *italics*.
  Correction text: TX=.175x, FT=3, LW=1, LV=62, Italics
- If any item(s) of work that was part of the RFC drawings is not constructed, the item(s) must be crossed out and stated that it was not constructed
  Correction text : TX=.175x, FT=3, LW=1, LV=62, *Italics*
- Any design change initiated by the contract change order must be indicated on the As-Built drawings.

04/02/2014 - RFP No.: HSR13-57

- Best practice is to show all as-built changes on the original RFC drawings. If the as-built changes cannot be clearly indicated on the RFC drawing, then a revised drawing may be necessary in order to indicate the changes. A revised drawing is an additional drawing with no new or additional work added. They may include the entire RFC drawing or a portion of the sheet in greater detail for clarity purposes. The signature and seal information of the original RFC drawings shall remain since no new work is was added. Use revised drawings only when absolutely necessary. Drawings must be labeled “REVISED” and a lower case “r” added to the drawings number, as shown below.

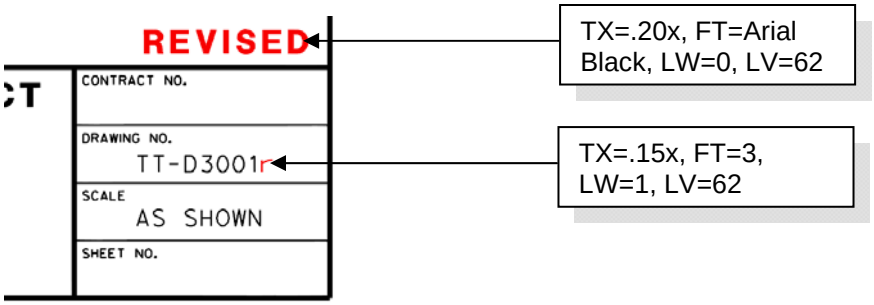

If new or additional work is designed and constructed, additional drawings need to be included in the as-built drawings. An additional drawing only indicates new or additional work, not revisions. . All additional drawings generated during construction shall update the signature and seal information to the resident engineer in charge who initiated the new and additional drawings. Additional drawings must be labeled “”ADDITION” and a lower case “a” are added to the drawings number, as shown below.

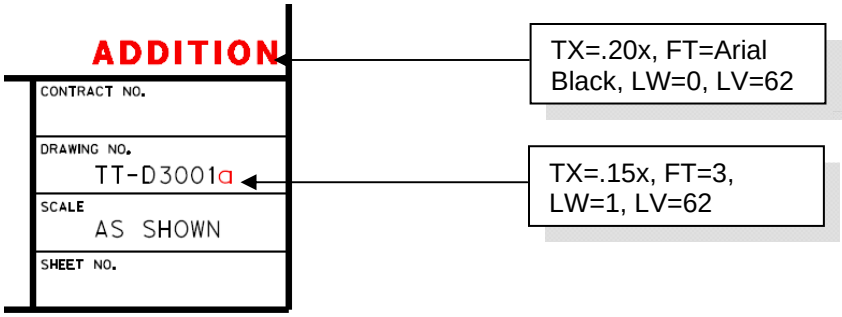

04/02/2014 - RFP No.: HSR13-57

4.2.2 AS-BUILT STAMPS

Two different cells from the CHSTP cell library shall be used for developing as-built drawings. Each as-built drawing must have one of the two stamps, including revised drawings and additional drawings.

Cell = Asblt1

Use: As-built drawings with no corrections

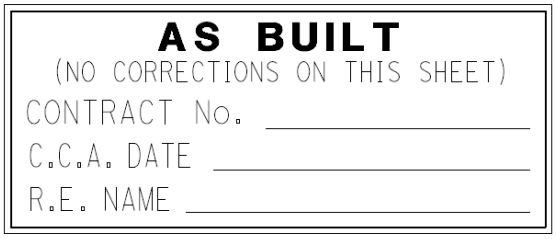

Cell = Asblt2

Use: As-built drawings with corrections

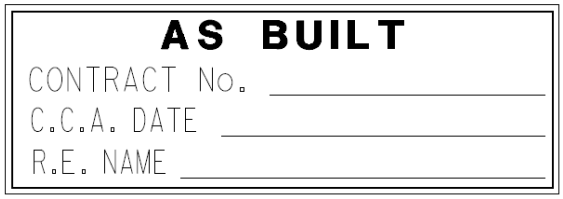

4.3 THIRD PARTY DRAWINGS

All third party submittals shall be submitted in accordance of the local agency/company CADD requirements and submittal process. In addition to the local agency/company submittal requirements, PDFs shall be submitted to the Authority for all third party submittals.

04/02/2014 - RFP No.: HSR13-57

APPENDIX A – FACILITY NAMING CONVENTION SUMMARY TABLE

PROJECT NOMENCLATURE / FACILITY NAMING	CODE	EXAMPLE
INFRASTRUCTURE ELEMENTS		
1. Survey and Mapping		
Survey Markers	**X####(P)**	B204P
2. Right-of-Way		
Maintenance / Access Gates	**X-MW[1/2]-[NAM](-#)**	S-MW2-FLO-2
3. Track Alignment		
Tracks		
- Mainline Tracks	**Xn**	S1
- Station Tracks	**Xn (not 1 or 2)**	S5
- Terminal Tracks	**X-[NAM]-T-##**	B-SAF-T-01
- Yard Track	**X-[NAM]-Y-##**	S-FRE-Y-01
- Yard Track Lead	**X-[NAM]-YLn**	S-FRE-YL1
- Interlocking		
Interlocking at Stations	**X-INT-[NAM]-(S/N)**	S-INT-FLO-S
Interlocking Intermediate	**X-INT-[NAM]**	S-INT-FLO
4. Roadway Works		
Access Roadways	**X-[NAM](-#)**	S-FLO
5. Temporary Construction Facilities		
Temporary Access Roads	**X-[NAM](-#)-T**	S-FLO-T
6. Stations		
HST Stations	**X-S-[NAM]**	S-S-FRE
Non HST Stations (through Stations)	**Use current station name**	Burlingame Station
Platform		
- Platforms Side	**X-[NAM]-[1]/[2]**	S-FRE-1
- Platforms Center	**X-[NAM]**	S-FRE
- Terminal Platform	**X-[NAM]-##**	B-TRA-04
7. Grade Separation Structures		
Underpass	**X-UP-mp**	S-UP-170.2
HST Overpass	**X-OP-mp**	S-OP-175.5
HST Aerial Structure	**X-AS-mp**	S-AS-180.5
HST Aerial Structure (Two Structures)	**X-AS-mp-[1]/[2]**	S-AS-188.4-1
HST Bridge	**X-BR-mp**	S-BR-172.5
HST Separation	**X-SP-mp**	S-SP-176.8
- Piers / Bents	**X-{EL}-##**	S-AS-187.5-05

04/02/2014 - RFP No.: HSR13-57

- Piers / Bents (Two-Structures)	**X-{EL}-mp-[1]/[2]-##**	S-AS-187.5-1-05
8. Tunnels / Underground Structures		
Tunnels	**X-TS[1]/[2]-mp-(n)**	B-TS2-77.5-3
- Portals	**X-TS[1]/[2]-mp-(n)-P(N/S)**	B-TS1-66.5-3-PN
- Ventilation Structures	**X-TS[1]/[2]-mp-(n)-V#**	B-TS1-66.9-3-V1
- Cross Passages	**X-TS-mp-(n)-C#**	B-TS-67.2-3-C1
9. Buildings		
Operation Control Centers	**X-OCC-#**	C-OCC-1
10. Earthwork, Retaining Structures and Borrows Sites		
Retaining Walls	**X-RW[1]/[2]-mp**	S-RW1-188.4
Sound Wall	**X-SW[1]/[2]-mp**	S-SW1-172.5
Wind Wall	**X-WW[1]/[2]-mp**	S-WW1-280.6
Intrusion Protection Wall	**X-IP[1]/[2]-mp**	S-IP1-300.7
11. Hydrology/Hydraulics, Drainage/Grading	*TBD*	*TBD*
12. Utilities	*TBD*	*TBD*
13. Geotechnical	*TBD*	*TBD*
14. Seismic	*TBD*	*TBD*
15. Contaminated Soil/Groundwater	*TBD*	*TBD*
16. Other	*TBD*	*TBD*
SYSTEMS ELEMENTS		
1. Traction Power		
Substations	**X-SS-[NAM]**	S-SS-FLO
Paralleling Stations	**X-PS-[NAM]**	S-PS-FLO
Switching Stations	**X-SWS-[NAM]**	S-SWS-FLO
Phase Break	**X-PB-SS-[NAM] or X-PB-SWS-[NAM]**	S-PB-SWS-FLO
2. Power Utility Company / HV Electric Power Connections		
Utility Switching Stations	**X-SS-[NAM]-USW**	S-SS-FLO-USW
HV Connection	**X-SS-[NAM]-USW-HV[kV###]**	S-SS-FLO-USW-HV115
3. Overhead Contact System (OCS)		
4. Train Control		
Interlocking Houses (Intermediate)	**X-INT-[NAM]-H#**	S-INT-FLO-H1
Interlocking Houses (Stations)	**X-INT-[NAM]-(S/N)-H#**	S-INT-FLO-N-H1
5. Communications		
Traction Power Facility and Train Control Interlocking Houses	**X-{TYPE}-[NAM]-RT X-SS-[NAM]-RT X-PS-[NAM]-RT X-SWS-[NAM]-RT X-INT-[NAM]-RT**	S-SS-FLO-RT

04/02/2014 - RFP No.: HSR13-57

Standalone Radio Tower Site	**X-ST-[NAM]-RT**	S-ST-FLO-RT
MAINTENANCE ELEMENTS		
1. Maintenance of Equipment		
Facility	**X-MOE-[NAM]**	B-MOE-GEN
2. Maintenance of Infrastructure		
Facility	**X-MOI-[NAM]**	S-MOI-GEN

04/02/2014 - RFP No.: HSR13-57

APPENDIX B –PRELIMINARY ENGINEERING FOR PROCUREMENT DRAWING SAMPLE PLAN CHECKLISTS

The sample plan checklists are intended for use in the preparation of the contract drawings .

04/02/2014 - RFP No.: HSR13-57

TITLE SHEET

General

- ☐ Titlesheet shall always include "Proposed Preliminary Design" & "California High Speed Train Project" title text. Subdivision and segment and/or contract titles shall be revised as needed
- ☐ Project / Subdivision title TX=0.45x, FT=Arial Black, LW=0, LW=1060
- ☐ Contract title TX=0.35x, FT=Arial Black, LW=0, LV=1060
- ☐ Seal information required from Engineering Manager. (1) seal per segment
- ☐ Design Firm/JV logos shall be shown in the lower left corner

California High Speed Train Project Map

- ☐ California High-Speed Train Project Map shall be located at the top right corner of the sheet.
- ☐ Alignment shown for the entire CHSTP project. Hatch Project Location area to indicate limit of work
- ☐ Limit of Work Hatch LV=1060, Angle=45d, Scale of 0.05x
- ☐ CHSTP Project Map Alignment (within limit of work) LW=7, LV=1019
- ☐ CHSTP Project Map Alignment (within limit of work) LW=3, LV=1019

Project Location Map

- ☐ Project location map required indicating the limits of work for the CHSTP alignment.
- ☐ Project location shall include, but not limited to, the following information
  - Alignment (no station labels)
  - Begin and End work stations & labels
  - County Boundary linework and labels
  - City Names
  - Major Roads/Road Names
  - Label with arrow for nearest HST station
  - Important adjacent railroad / infrastructure features
  - Major water features

- ☐ HST Alignment within work limit LW=10, LV=1018
- ☐ HST Alignment outside work limit LW=3, LV=1019
- ☐ City Name TX=0.175x, FT=3, LW=3, LV=1060
- ☐ Road Names/Callouts TX=0.14x, FT=3, LW=1, LV=1060
- ☐ County Names TX=0.24x, FT=Arial Black, LW=0, LV=1060, Italics
- ☐ BEGIN/END work labels TX=0.175, FT=3, Lw=2, LV=1060

04/02/2014 - RFP No.: HSR13-57

INDEX OF DRAWINGS

- ☐ Index Volume title shall be TX=0.24x, FT=Arial Black, LW=0, LV=1060
- ☐ Index table information shall be TX=0.14x, FT=3, LW=1, LV=1060
- ☐ Exterior Border lines shall be LV=1060, LW=2
- ☐ Interior vertical column lines and column heading line shall be LV=1060, LW=1
- ☐ Interior horizontal row lines shall be LV=1060, LW=0
- ☐ Column titles shall be Drawing No., Rev No. and Drawing Description
- ☐ All drawing titles shall be listed in the Drawing Description column. A dash between text represents a new line in the titleblock.
- ☐ Gaps in pagination shall be indicated as “(NOT USED)” as shown below

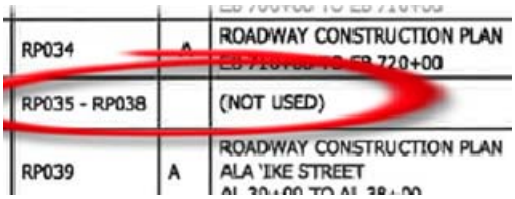

RP034	A	ROADWAY CONSTRUCTION PLAN
RP035 - RP038		(NOT USED)
RP039	A	ROADWAY CONSTRUCTION PLAN ALA 'IKE STREET

04/02/2014 - RFP No.: HSR13-57

SURVEY CONTROL DATA PLAN

- ☐ Notes shall be located at the top right corner of the sheet.
- ☐ Road names and Callouts shall be TX=0.14x, FT=3, LW=1, LV=1060
- ☐ Survey Data points shall be TX=0.175x, FT=3, LW=1, LV=1015
- ☐ Leaders and Dimensions shall be TX=0.14x, FT=3, LV=1012
- ☐ Existing topographic image
- ☐ North arrow
- ☐ Show Survey data control points with symbol (AC=PRHV)
- ☐ Horizontal and Vertical Control information organized into a table. Columns shall include Point #, Description, Northing, Easting and Elevation
- ☐ List Horizontal Control Datum, vertical control datum and projection information
- ☐ AC=MATCH LINE for Match line text and symbology
- ☐ Station HST alignment every 1000’ (S2 only unless tracks are non-concentric) TX=0.14x, LV=1019, LW=1
- ☐ HST alignment: LV=1020, LW=3

04/02/2014 - RFP No.: HSR13-57

TRACK GUIDEWAY AND ROADWAY TYPICAL SECTIONS

General

- ☐ Notes shall be located at the top right corner of the sheet.
- ☐ Section, Plan, Profile and Detail title shall be TX=0.24x, FT=Arial Black, LW=0, LV=1015 for Track Plans, LV=10 for Roadway Plans
- ☐ Notes title shall be TX=0.175x, FT=3, LW=1, LV=1015 for Track Plans, LV=60 for Roadway Plans
- ☐ Leaders and Dimensions shall be TX=0.14x, FT=3, LV=1012 for Track Plans, LV=60 for Roadway Plans
- ☐ Notes and callouts shall be TX=0.14x, FT=3, LW=1, LV=1014 for Track Plans, LV=60 for Roadway Plans
- ☐ AC=MATCH LINE for Match line text and symbology
- ☐ AC=GR-SCALE for scale bar (full size scale)
- ☐ Label Track Right of Way and Temporary Construction easement as “PROP ROW” and “PROP TCE” respectively at each matchline.
- ☐ Increasing stationing of the typical sections from top to bottom of sheet.

Track Cross-Sections

- ☐ Typical cross sections identifying
  - station to station geometrics
  - surface type and depth
  - slope information
- ☐ Show appropriate vertical clearances from Top of Rail or Top of Low Rail and horizontal clearances from track centerline to structures.
- ☐ OCS components shown in gray scale (Color 140)
- ☐ Label Alignment Control Point (CP) and Top of Rail (TOR)
- ☐ Intrusion Protection
- ☐ Cable Trough
- ☐ Drainage features

Roadway Cross-Sections

- ☐ Typical cross sections identifying
  - station to station roadway geometrics
  - surfacing type and depth
  - slope information
  - guardrail, curb type, barrier type
  - vertical cut locations
- ☐ No rolling stock shown

Structural and Tunnel Cross-Sections

- ☐ Bridge superstructure cross-sections (including structure depth and construction type)
- ☐ Tunnel cross sections including considerations for train operations, fire and life safety requirements, OCS, and fixed equipment
- ☐ No rolling stock shown

04/02/2014 - RFP No.: HSR13-57

KEY MAPS (TRACK GUIDEWAY, TRACK STRUCTURES & UTILITIES)

- ☐ Notes shall be located at the top right corner of the sheet.
- ☐ Notes title shall be TX=0.175x, FT=3, LW=2, LV=1015
- ☐ Leaders and Dimensions shall be TX=0.14x, FT=3, LV=60 for Roadway Plans, LV=1012 for Track Plans
- ☐ Station and street labels shall be TX=0.14x, FT=3, LW=1, LV=60 for Roadway Plans, LV=1014 for Track Plans. Station @ each end of sheet match line.
- ☐ City/Town names & Drawing No. shall be TX=0.175x, FT=3, LW=2, LV=60 for Roadway Plans, LV=1015 for Track Plans
- ☐ Scale varies
- ☐ Topographic background (no aerial) for 30% design drawings, Aerial background for 15% design drawings

04/02/2014 - RFP No.: HSR13-57

TRACK GUIDEWAY HORIZONTAL ALIGNMENT DATA TABLE

- ☐ Table Headings shall be TX=0.175x, FT=3, LW=2, LV=1060
- ☐ Text with tables shall be TX=0.14x, FT=3, LV=1060
- ☐ Exterior Border lines – LV=1060, LW=2
- ☐ Interior vertical column lines and column heading line: LV=1060, LW=1
- ☐ Interior horizontal row lines: LV=1060, LW=0
- ☐ Geometric data to two decimal places
- ☐ Design speed to one decimal place
- ☐ Actual and unbalanced superelevation data to the nearest ¼ inch

04/02/2014 - RFP No.: HSR13-57

TRACK GUIDEWAY PLAN AND PROFILE

- ☐ Notes shall be located at the top right corner of the sheet.
- ☐ Plan & Profile titles shall be TX=0.24x, FT=Arial Black, LW=0, LV=1015
- ☐ Notes title shall be TX=0.175x, FT=3, LW=1, LV=1015
- ☐ Leaders and Dimensions shall be TX=0.14x, FT=3, LV=1012
- ☐ Notes and callouts shall be TX=0.14x, FT=3, LW=1, LV=1014
- ☐ Dimensions shall be in decimal feet (##.##)
- ☐ Existing topographic image
- ☐ North arrow
- ☐ Vertical Alignment showing key existing features (ground, water bodies, over and under crossings)
- ☐ AC=MATCH LINE for Match line text and symbology
- ☐ AC=GR-SCALE for scale bar (full size scale)
- ☐ Critical Clearances shall be confirmed and noted on plan and profile views
- ☐ Delineate environmentally sensitive areas (ESA) and other areas that have restricted access
- ☐ Label HST tracks (S1, S2, et al) and other parallel and /or transverse highways and railroads
- ☐ Right-of-Way limits including temporary easements. Label Track Right of Way as “PROP ROW”. Label Temporary Construction easement as “PROP TCE” at each Matchline.
- ☐ ROW note as note #1.
- ☐ No toe and top of slope line work or callouts shall be shown
- ☐ Fencing, Noise mitigation and/or Retaining features shall be shown
- ☐ Show outline in profile view for grade separation structures
- ☐ Show station equations for intersecting alignments
- ☐ Show curve, spiral as a table on a separate sheet. Show curve number with radius on plan view only.
- ☐ Label tangent bearings and distance on alignment

04/02/2014 - RFP No.: HSR13-57

TRACK STRUCTURES TYPICAL SECTION

- ☐ Total width of structure
- ☐ Spacing between track centerline and OCS pole centerline
- ☐ Spacing between track centerlines
- ☐ OCS configuration Color =140
- ☐ Indicate and show top of rail
- ☐ Callout walkway and cable trough
- ☐ Cross slope of the deck
- ☐ Location of control point (CP)
- ☐ Structure depth/type
- ☐ Substructure:
  - Pier /column diameter
  - Foundation - pile cap (Length, Width, Thickness)
  - Drill shaft (Number, Diameter, Length)
  - Minimum horizontal clearance from face of HST column to critical elements.
- ☐ Approximate original ground (OG)
- ☐ Required Vertical and Horizontal clearances, if any, to adjacent or crossing facilities (RR, HWY, et al)

04/02/2014 - RFP No.: HSR13-57

TRACK STRUCTURAL PLAN

(Sheet 1 of 2)

GENERAL:

- ☐ Notes shall be located at the top right corner of the sheet.
- ☐ Plan, Profile and Top Of Rail titles shall be TX=0.24x, FT=Arial Black, LW=0, LV=1015
- ☐ Notes title is TX=0.175x, FT=3, LW=1, LV=1015
- ☐ Leaders and Dimensions shall be TX=0.14x, FT=3, LV=1012
- ☐ Notes and callouts shall be TX=0.14x, FT=3, LV=1014
- ☐ Dimensions shall be in feet and inches (##'-##")
- ☐ Label HST tracks (S1, S2, et al) and other parallel and /or transverse highways and railroads
- ☐ AC=MATCH LINE for Match line text and symbology
- ☐ AC=GR-SCALE for scale bar (full size scale)
- ☐ Right-of-Way limits including temporary easements. Label Track Right of Way as "PROP ROW". Label Temporary Construction easement as "PROP TCE".
- ☐ Transition structure locations and Type (i.e., at-grade to bridge, bridge to tunnel, et al)
- ☐ Table of retaining wall limits (extent and height) of walls and foundations. Shown on structural layout plans
- ☐ Indicate requirements for existing facility modifications (pedestrian, roadway, highway, and railroad)

PLAN:

- ☐ Existing topographic image
- ☐ Right-of Way limits including temporary easements. Label Track Right of Way as "PROP ROW". Label Temporary Construction easement as "PROP TCE".
- ☐ North Arrow and Name and direction of nearest towns and/or cities
- ☐ Name and direction of stream flow or roadway under the structure
- ☐ Total width of structure
- ☐ Control line intersection stations, as applicable
- ☐ Station intervals for scale <50 scale
- ☐ Location of minimum vertical clearance
- ☐ Label HST tracks (S1, S2, et al) and other parallel and /or transverse highways and railroads
- ☐ Slope paving at abutment, as applicable
- ☐ Horizontal clearance from pier centerline to existing and proposed elements
- ☐ Show HST alignment points (TS, SC, CS, et al), as applicable
- ☐ Show major existing utilities (overhead and underground) and utility relocations as applicable
- ☐ Existing facility modifications plan (pedestrian, roadway, highway, railroad), major utility relocations
- ☐ Tangent and curve callouts
- ☐ Skew angel (between the normal or radial to centerline of structures and CL of pier or abutment), as applicable

04/02/2014 - RFP No.: HSR13-57

TRACK STRUCTURAL PLAN

(Sheet 2 of 2)

- ☐ Datum (NGVD 88) elevations
- ☐ Span layout, for complex and non-standard structures.
  - Length / Width / Depth
  - Maximum height
  - Expansion joint locations [Aerial/Overpass/Underpass/ Separation Structures]

ELEVATION:

- ☐ Total length of structure along the control line (begin to end)
- ☐ Minimum vertical clearance(s)
- ☐ Datum (NGVD 88) line with elevation and stations
- ☐ Approximate original ground (OG) line
- ☐ Estimated 100-year flood elevation, as applicable
- ☐ Span length(s) from begin/end of structure to pier centerline and between each pier centerlines (Aerial)
- ☐ Locations of expansion joints [Aerial/Overpass/Underpass/ Separation Structures]
- ☐ Station and Elevation (top of rail) at first & last pier on each sheet [Aerial/Overpass/Underpass/ Separation Structures]. Station and Elevation (top of rail) at Match lines of each sheet [Trench]. Add callouts at crest/sag pts
- ☐ Abutment and bent numbers [Aerial/Overpass/Underpass/ Separation Structures]
- ☐ Struts and spacing of struts, as applicable [Trench]

04/02/2014 - RFP No.: HSR13-57

TRACK STRUCTURES / ROADWAY DRAFT GENERAL PLAN

(Sheet 1 of 2)

GENERAL:

- ☐ Notes shall be located at the top right corner of the sheet.
- ☐ Plan, Profile and Top Of Rail titles shall be TX=0.24x, FT=Arial Black, LW=0, LV=315
- ☐ Notes title is TX=0.175x, FT=3, LW=2, LV=315
- ☐ Leaders and Dimensions shall be TX=0.14x, FT=3, LV=312
- ☐ Notes and callouts shall be TX=0.14x, LW=1, FT=3, LV=314
- ☐ Dimensions shall be in feet and inches (XX'-XX")
- ☐ Label HST track (S2) and other parallel and /or transverse highways and railroads
- ☐ AC=MATCH LINE for Match line text and symbology
- ☐ AC=GR-SCALE for scale bar (full size scale)
- ☐ Right-of Way limits. Label Track Right of Way as "PROP ROW".
- ☐ Easements associated with structure
- ☐ Transition structure locations and Type (i.e., at-grade to bridge)
- ☐ Table of retaining wall limits (extent and height) of walls and foundations
- ☐ Indicate requirements for existing facility modifications (pedestrian, roadway, highway, and railroad)

TYPICAL SECTION:

- ☐ Total width of structure
- ☐ Show widths of traveled way, sidewalks, shoulder and medians [Roadway]
- ☐ Cross slope of the deck
- ☐ Location of profile grade (PG)
- ☐ Show width of barrier rail and type only [Roadway]
- ☐ Structure depth/type
- ☐ Show utilities and openings for future utilities
- ☐ Approximate original ground (OG)
- ☐ Substructure dimensions [Aerial/Overpass/Underpass/ Separation Structures]
    - pier/footing locations
    - spread footings and/or drilled pier
    - column type
    - approximate size
    - identify areas where supports
    - or foundations are prohibited

04/02/2014 - RFP No.: HSR13-57

TRACK GUIDEWAY / ROADWAY STRUCTURAL DRAFT GENERAL PLAN

(Sheet 2 of 2)

PLAN:

- ☐ Existing topographic image
- ☐ North arrow
- ☐ HST control line and alignment name
- ☐ Total width of structure
- ☐ Control line intersection stations
- ☐ 100' Station intervals for scale <50 scale
- ☐ Location of minimum vertical clearance
- ☐ Show begin and end station of structure
- ☐ Label HST track (S2) and other parallel and /or transverse highways and railroads
- ☐ Right-of Way limits. Label Track Right of Way as "PROP ROW".
- ☐ Slope of cut or fill (2:1, 4:1, et al), as applicable
- ☐ Top and toe of approach fill or cut, as applicable
- ☐ Bank protection or slope paving, as applicable
- ☐ Horizontal clearance from face of pier to HST track centerline and other critical elements
- ☐ Show major existing utilities (overhead and underground)
- ☐ Show proposed TPS sites
- ☐ Approach slab, as applicable
- ☐ Stream flow and/or traffic arrows, as applicable
- ☐ Guard rail, temporary railings, and approach rail curb

ELEVATION:

- ☐ Abutment and bent numbers
- ☐ Total length of structure along the control line (begin to end)
- ☐ Span length(s) from begin/end of structure to pier centerline and between each pier centerlines
- ☐ Minimum vertical clearance(s)
- ☐ Datum (NGVD 88) line with elevation and stations
- ☐ Approximate original ground (OG) line
- ☐ Locations of expansion joints, as applicable
- ☐ Pier/footing locations
- ☐ Struts and spacing of struts, as applicable

04/02/2014 - RFP No.: HSR13-57

ROADWAY INDEX MAP

- ☐ Notes shall be located at the top right corner of the sheet.
- ☐ Notes title shall be TX=0.175x, FT=3, LW=2, LV=1015
- ☐ Leaders and Dimensions shall be TX=0.14x, FT=3, LV=60
- ☐ Notes and callouts shall be TX=0.14x, FT=3, LW=1 LV=60
- ☐ Map Titles, Column Headings and City names shall be TX=0.24x, FT=Arial Black, LW=0, LV=60
- ☐ Scale varies
- ☐ Provide table for Grade Separation Location, Sheet Title, Roadway Drawing number(s) and Structural Drawing number(s), as applicable
- ☐ Use symbol to denote location
- ☐ Differentiate between grade separation, local road modification and State Facility modifications
- ☐ Grade Separation: AC=KMGS
- ☐ Caltrans Facilities Modification : AC= KMCT
- ☐ Local Road Modification: AC= KMLR
- ☐ Show HS Alignment line. No station Labels. LV=1019, LW=6
- ☐ Show Roadway Alignments as needed. No station Labels. LV=13, LW=4
- ☐ Background map showing roadway line work and names only (CO=140)
- ☐ Street names shall be TX=0.14x, FT=3, LV=60

04/02/2014 - RFP No.: HSR13-57

ROADWAY GRADE SEPARATION PLAN AND PROFILE

- ☐ Notes shall be located at the top right corner of the sheet.
- ☐ Plan & Profile titles shall be TX=0.24x, FT=Arial Black, LW=0, LV=10
- ☐ Notes title shall be TX=0.175x, FT=3, LW=2, LV=23
- ☐ Leaders and Dimensions shall be TX=0.14x, FT=3, LV=23
- ☐ Notes and callouts shall be TX=0.14x, FT=3, LV=23
- ☐ Superelevation diagram designed only for State Highways (not local roadways).
- ☐ Vertical Alignment showing key existing features (ground, water bodies, over and under crossings)
- ☐ Label HST track (S2) and other parallel and /or transverse highways and railroads
- ☐ AC=MATCH LINE for Match line text and symbology
- ☐ AC=GR-SCALE for scale bar (full size scale)
- ☐ Critical Clearances shall be confirmed and noted on plan and profile views
- ☐ Curve, tangent and/or retaining wall numbers/tables show in plan view
- ☐ Right-of-Way limits including temporary easements. Label Track Right of Way as “PROP ROW”. Label Temporary Construction easement as “PROP TCE” at each Matchline.
- ☐ Indicate required driveway relocations
- ☐ Radius callouts for access roads
- ☐ Label conforms points
- ☐ Line/curve data tables for road alignment geometry and retaining wall table as needed. Below standards apply to the tables:
  - Table Headings shall be TX=0.175x, FT=3, LW=2, LV=23
  - Text with tables shall be TX=0.14x, FT=3, LW=1, LV=23
  - Exterior Border lines shall be LV=23, LW=2
  - Interior vertical column lines and column heading line shall be LV=23, LW=1
  - Interior horizontal row lines: LV=23, LW=0

04/02/2014 - RFP No.: HSR13-57

UTILITY COMPOSITE PLANS

- ☐ Notes shall be located at the top right corner of the sheet.
- ☐ Leaders and Dimensions shall be TX=0.14x, FT=3, LV=860
- ☐ Notes title shall be TX=0.175x, FT=3, LW=2, LV=860
- ☐ Notes and callouts shall be TX=0.14x, FT=3, LV=860
- ☐ 100’ scale
- ☐ Right-of Way limits including utility easements. Label Track Right of Way as “PROP ROW” at each Matchline.
- ☐ Label HST tracks (S1, S2, et al) and other parallel and /or transverse highways and railroads
- ☐ Show Utilities to be removed and/or relocated
  - Pattern portion of the utility being affected - AC=UTIL-RMV-RLOC
  - No LF required
  - Numerical callout to corresponding chart detailing facility, owner and mitigation
  - If known, show proposed relocation with leaders showing “TO” and “FROM”
- ☐ Show drainage facilities that shall be under other’s agencies/jurisdictions

04/02/2014 - RFP No.: HSR13-57

UTILITY PROTECTION AND RELOCATION PLAN AND PROFILE

- ☐ For High Risk Utilities as defined by TM 2.7.5
- ☐ 1”=50’ Horizontal ; 1”=10’ Vertical
- ☐ Leaders and Dimensions shall be TX=0.14x, FT=3, LV=860
- ☐ Label HST tracks (S1, S2, et al) and other parallel and /or transverse highways and railroads
- ☐ Notes title shall be TX=0.175x, FT=3, LW=2, LV=860
- ☐ Notes and callouts shall be TX=0.14x, FT=3, LV=860
- ☐ Right-of Way limits including utility easements. Label Track Right of Way as “PROP ROW” at each Matchline.
- ☐ Show High Risk Utilities to be removed and/or relocated
    - Pattern portion of the utility being affected - AC=UTIL-RMV-RLOC
    - No LF required
    - Label “BEGIN” and “END” of removal

04/02/2014 - RFP No.: HSR13-57

GRADING AND DRAINAGE PLAN ALONG TRACK ALIGNMENT

- ☐ Notes shall be located at the top right corner of the sheet.
- ☐ Leaders and Dimensions shall be TX=0.14x, FT=3, LV=860
- ☐ Notes title shall be TX=0.175x, FT=3, LW=2, LV=860
- ☐ Notes and callouts shall be TX=0.14x, FT=3, LV=860
- ☐ Show line style for ditch/swale center LS=rd-flowln, LW=1
- ☐ All proposed drainage line work, including pipes, ditches and anno: LV= 824 ut-stormD-p
- ☐ No pipe sizes or slopes on drainage annotation
- ☐ Label HST tracks (S1, S2, et al) and other parallel and /or transverse highways and railroads
- ☐ Right-of Way limits including utility easements. Label Track Right of Way as “PROP ROW”. Right-of Way limits. Label Track Right of Way as “PROP ROW”.
- ☐ No proposed drainage line work shown when alignment is within trench, tunnel and cut-and-cover structures
- ☐ Show/Label connections to existing drainage
- ☐ Show limit of grading for track
- ☐ Show limit of detention basin only.
- ☐ Show floodplain information. LS=ph-FL for 100yr boundary
- ☐ Show Grade Separation alignment only. No proposed master line work. Place note to refer to the corresponding grading and drainage roadway sheet.
- ☐ Flow arrows are permissible to indicate direction of flow to provide additional clarity

04/02/2014 - RFP No.: HSR13-57

APPENDIX C –PRELIMINARY ENGINEERING FOR PROCUREMENT DRAWING SAMPLE PLANS

04/02/2014 - RFP No.: HSR13-57

CALIFORNIA
HIGH-SPEED RAIL AUTHORITY

PROPOSED PRELIMINARY DESIGN

CALIFORNIA HIGH-SPEED TRAIN PROJECT

SUBDIVISION

SEGMENT/CONTRACT

Project/Subdivision Title
TX=0.45 x Scale
FT=Arial Black, LW=0, LW=1060

Segment/Contract Title
TX=0.35 x Scale
FT=Arial Black, LW=0, LW=1060

CHSTP Map
Hatch Limit of Work.
(LV=1060, Angle=45 d, Scale=0.05xScale)
LV=1019, LW=7 for alignment within limit of work
LV=1019, LW=3 for alignment outside of limit of work

City Names
TX=0.175 x Scale
FT=3, LW=2, LV=1060

Road Names/Callouts
TX=0.14 x Scale
FT=3, LW=1, LV=1060

County Names
TX=0.24 x Scale
FT=Arial Black, LW=0, LV=1060, Italics

Engineer Seal
Seal information from Engineering Manager
(1 per segment)

BEGIN/END work labels
TX=0.175 x Scale
FT=3, LW=2, LV=1060

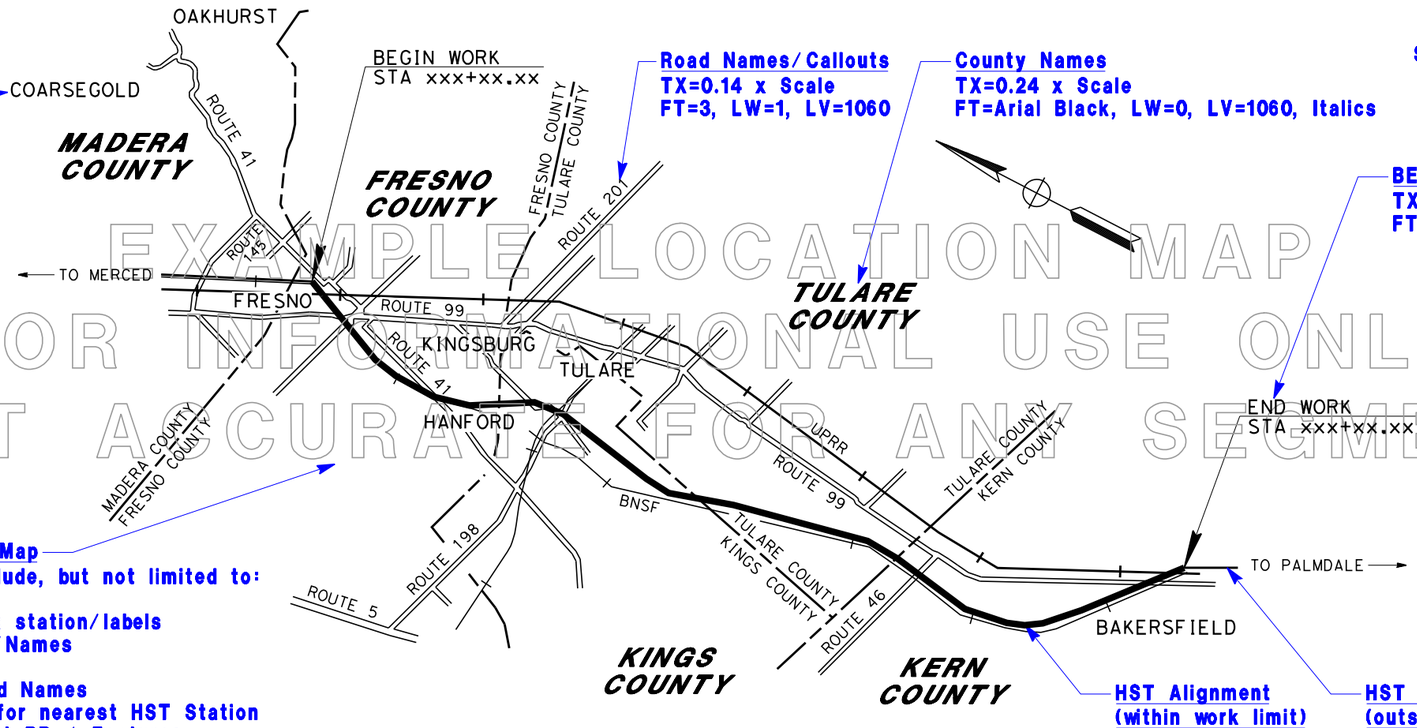

EXAMPLE LOCATION MAP
FOR INFORMATIONAL USE ONLY
NOT ACCURATE FOR ANY SEGMENT

Project Location Map
Items to show include, but not limited to:
-Alignment
-Begin & End work station/labels
-County Boundary/Names
-City Names
-Major Roads/Road Names
-Label with arrow for nearest HST Station
-Important adjacent RR / Features
-Major Water features

HST Alignment (within work limit)
LW=10, LV=1019

HST Alignment (outside work limit)
LW=3, LV=1019

PROJECT LOCATION MAP

Text Title
TX=0.24 x Scale
FT=Arial Black, LW=0, LV=1015

REGISTERED PROFESSIONAL ENGINEER
No.
Exp.
CIVIL
STATE OF CALIFORNIA

REGISTERED PROFESSIONAL ENGINEER
No.
Exp.
CIVIL
STATE OF CALIFORNIA

DESIGN FIRMS

CONTRACT No.

DATE: MM/DD/YYYY

04/02/2014 - RFP No.: HSR13-57

LaverdeV 3/28/2014 10:10:02 AM c:\projectwise\pb\projectwiseint\laverdev\dms51960\01-General-Titlesheet-Map-Sample.dgn

VOLUME NO. - GENERAL & TRACK ALIGNMENT

Index Volume Title
TX=0.24 x Scale
FT=Arial Black, LW=0

DRAWING No.	REV No.	DRAWING DESCRIPTION
		VOLUME 1A - GENERAL
GE-D0001		PACKAGE 1A - TITLE SHEET
GE-A0001		PACKAGE 1A - GENERAL - INDEX OF DRAWINGS
VS-C0001		PACKAGE 1A - GENERAL - SURVEY CONTROL DATA - SHEET 1 OF 4
VS-C0002		PACKAGE 1A - GENERAL - SURVEY CONTROL DATA - SHEET 2 OF 4
VS-C0003		PACKAGE 1A - GENERAL - SURVEY CONTROL DATA - SHEET 3 OF 4
VS-C0004		PACKAGE 1A - GENERAL - SURVEY CONTROL DATA - SHEET 3 OF 4
		VOLUME 1B - TRACK ALIGNMENT
TT-B0001		PACKAGE 1A - TRACK GUIDEWAY - KEY MAP
TT-D3001		PACKAGE 1A - TRACK GUIDEWAY - TYPICAL SECTIONS
TT-D3002		PACKAGE 1A - TRACK GUIDEWAY - TYPICAL SECTIONS
TT-D3003		PACKAGE 1A - TRACK GUIDEWAY - TYPICAL SECTIONS
TT-D3004		PACKAGE 1A - TRACK GUIDEWAY - TYPICAL SECTIONS
TT-D3005		PACKAGE 1A - TRACK GUIDEWAY - TYPICAL SECTIONS
TT-D3006		PACKAGE 1A - TRACK GUIDEWAY - TYPICAL SECTIONS
TT-D3007		PACKAGE 1A - TRACK GUIDEWAY - TYPICAL SECTIONS
TT-D3008		PACKAGE 1A - TRACK GUIDEWAY - TYPICAL SECTIONS
TT-D3009		PACKAGE 1A - TRACK GUIDEWAY - TYPICAL SECTIONS
TT-D0001		PACKAGE 1A - TRACK GUIDEWAY - HORIZONTAL ALIGNMENT DATA
TT-D1000		PACKAGE 1A - TRACK GUIDEWAY - STA. 10535+00 TO 10554+00 - PLAN AND PROFILE
TT-D1001		PACKAGE 1A - TRACK GUIDEWAY - STA. 10554+00 TO 10582+00 - PLAN AND PROFILE
TT-D1002		PACKAGE 1A - TRACK GUIDEWAY - STA. 10582+00 TO 10610+00 - PLAN AND PROFILE
TT-D1003		PACKAGE 1A - TRACK GUIDEWAY- STA. 10610+00 TO 10638+00 - PLAN AND PROFILE
TT-D1004		PACKAGE 1A - TRACK GUIDEWAY - STA. 10638+00 TO 10666+00 - PLAN AND PROFILE
TT-D1005		PACKAGE 1A - TRACK GUIDEWAY - STA. 10666+00 TO 10694+00 - PLAN AND PROFILE
TT-D1006		PACKAGE 1A - TRACK GUIDEWAY - STA. 10694+00 TO 10722+00 - PLAN AND PROFILE
TT-D1007		PACKAGE 1A - TRACK GUIDEWAY - STA. 10722+00 TO 10750+00 - PLAN AND PROFILE
TT-D1008		PACKAGE 1A - TRACK GUIDEWAY - STA. 10750+00 TO 10778+00 - PLAN AND PROFILE
TT-D1009		PACKAGE 1A - TRACK GUIDEWAY - STA. 10778+00 TO 10806+00 - PLAN AND PROFILE
TT-D1010		PACKAGE 1A - TRACK GUIDEWAY - STA. 10806+00 TO 10834+00 - PLAN AND PROFILE
TT-D1011		PACKAGE 1A - TRACK GUIDEWAY - STA. 10834+00 TO 10862+00 - PLAN AND PROFILE
TT-D1012		PACKAGE 1A - TRACK GUIDEWAY - STA. 10862+00 TO 10890+00 - PLAN AND PROFILE
TT-D1013		PACKAGE 1A - TRACK GUIDEWAY - STA. 10890+00 TO 10918+00 - PLAN AND PROFILE
TT-D1014		PACKAGE 1A - TRACK GUIDEWAY - STA. 10918+00 TO 10946+00 - PLAN AND PROFILE
TT-D1015		PACKAGE 1A - TRACK GUIDEWAY - STA. 10946+00 TO 10974+00 - PLAN AND PROFILE
TT-D1016		NOT USED
TT-D1017		NOT USED
TT-D1030		PACKAGE 1A - SJVRR SOUTH SPUR - PLAN AND PROFILE - STA. 0+00 TO STA. 8+68.74

Table Information Text
TX=0.14 x Scale
FT=3, LW=1

Exterior Border
LV=1060, LW=2

Interior Row Lines
LV=1060, LW=0

Interior Column Lines
LV=1060, LW=1

INDEX OF DRAWINGS SAMPLES

Sample Plan
For purposes of procurement, additional coordination is required between RC's and PMT

REV	DATE	BY	CHK	APP	DESCRIPTION

DESIGNED BY E. SMITH
DRAWN BY A. ROBERTS
CHECKED BY C. JOHNSON
IN CHARGE J. DOE
DATE MM/DD/YYYY

PROPOSED PRELIMINARY DESIGN

NOT FOR CONSTRUCTION

CALIFORNIA HIGH-SPEED RAIL AUTHORITY

CALIFORNIA HIGH-SPEED TRAIN PROJECT
SEGMENT/PACKAGE

VOLUME NAME
INDEX OF DRAWINGS

CONTRACT NO.
DRAWING NO.
SCALE NO SCALE
SHEET NO.

04/02/2014 - RFP No.: HSR13-57

LayerdeV 3/28/2014 3:32:31 PM CAHSRP-PPM.tbl CHSR_PDF_half_black.pltc:\projectwise\pb\projectwiseint\layerdev\dms51960\02-Track-Guideway-General-Sheet-Index-Sample.dgn

TX=0.175 x Scale
FT=3, LW=2

NOTES:

1. HORIZONTAL CONTROL DATUM:
2. VERTICAL CONTROL DATUM:
3. PROJECTION:

TX=0.14 x Scale
FT=3, LW=1

AC=MATCHLINE

Road Names/Callouts
TX=0.175 x Scale
FT=3, LW=1, LV=1060

Survey Control PT
TX=0.175 x Scale
FT=3, LW=2, LV=1060

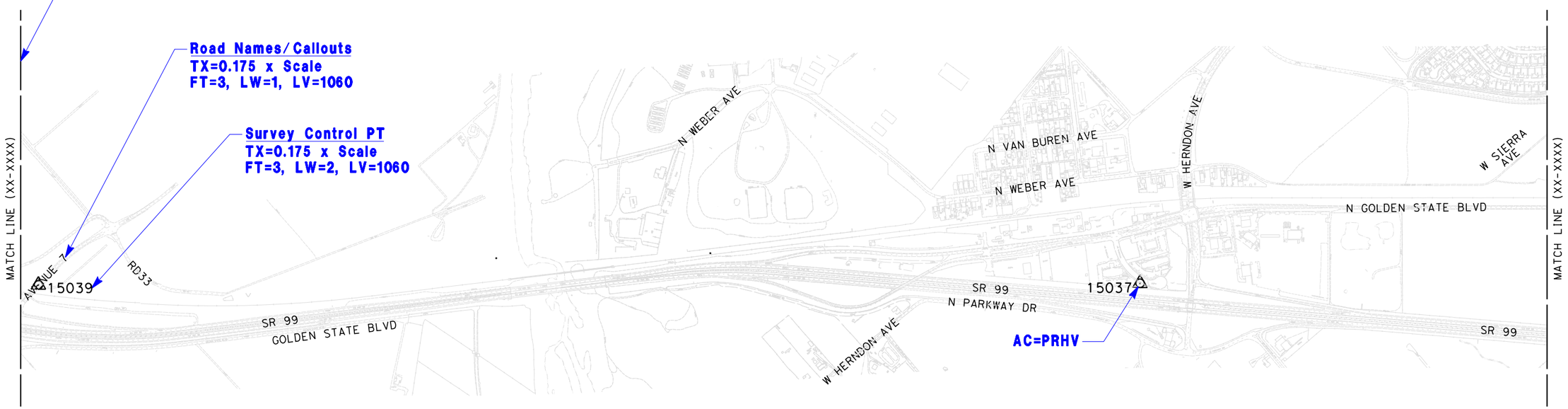

AC=PRHV

Table Information Text
TX=0.14 x Scale
LW=1, LV=1060,

Exterior Table Border
LV=1060, LW=2

Table Heading
TX=0.175 x Scale
LV=1060, LW=2

Interior Horizontal Row Lines
LW=0, LV=1060

HORIZONTAL AND VERTICAL CONTROL INFORMATION

POINT #	DESCRIPTION	NORTHING	EASTING	ELEVATION
15037	PB CONTROL: S182-P 2½" BRONZE DISK IN 1" IRON PIPE IN 8" CONCRETE PIER, STAMPED "CHSRA S182P LS 4430 2010"	2187855.88	6292923.69	300.64
15039	NGS CONTROL: DG9697	2194533.009	6285098.921	318.89

Interior Horizontal Row Lines
LW=1, LV=1060

AC=GR-SCALE

500 0 500 1000
1"=500'
SCALE APPLICABLE FOR FULL SIZE ONLY

SURVEY DATA CONTROL PLAN SAMPLE

Sample Plan
For purposes of procurement, additional coordination is required between RC's and PMT

REV	DATE	BY	CHK	APP	DESCRIPTION

DESIGNED BY E. SMITH
DRAWN BY A ROBERTS
CHECKED BY C. JOHNSON
IN CHARGE J. DOE
DATE MM/DD/YYYY

LICENSED LAND SURVEYOR JOHN DOE No. #### Exp. ##/##/## STATE OF CALIFORNIA

CALIFORNIA HIGH-SPEED RAIL AUTHORITY

CALIFORNIA HIGH-SPEED TRAIN PROJECT
SEGMENT/PACKAGE

GENERAL
SURVEY DATA CONTROL PLAN

CONTRACT NO.
DRAWING NO.
SCALE AS SHOWN
SHEET NO.

04/02/2014 - RFP No.: HSR13-57

LaverdeV 3/28/2014 10:30:13 AM CAHSRP-PPM.tbl CHSR_PDF_half_black.pltc:\projectwise\pb\projectwiseint\laverdev\dms51960\03-General-Survey-Data-Control-Sample.dgn

TX=0.175 x scale, FT=3, LW=2

TX=0.14 x scale, FT=3, LW=1

NOTES:

1. TRACKFORM SHOWN IS INDICATIVE
2. FOR STRUCTURE DIMENSIONS SEE STRUCTURAL CROSS SECTIONS
3. SUPERELEVATION IS NOT SHOWN. THE AMOUNT OF APPLIED SUPERELEVATION IS SHOWN IN THE CURVE DATA TABLES

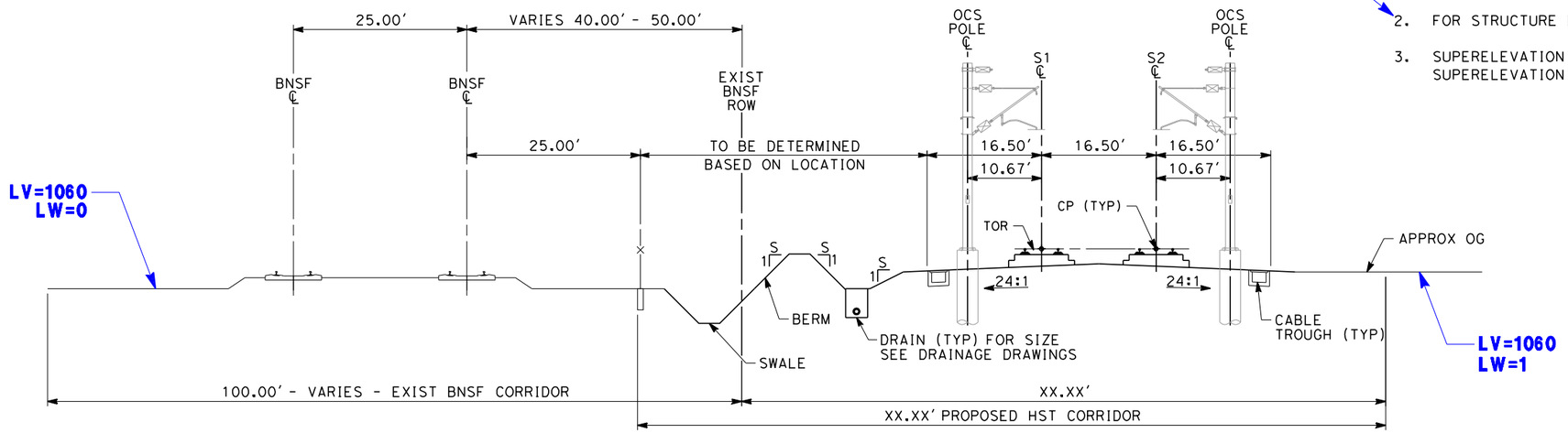

Stationing Increasing From Top To Bottom From Sheet

SECTION 11

"S" 577+00 TO 606+00

TWIN TRACK ADJACENT TO BNSF
95 FT HST ROW
FOR H = 0 TO 5 FT ABOVE OG

Text Titles
TX=0.24 x Scale
FT=Arial Black, LW=0, LV=1015
Subtitles
TX=0.175 x Scale
FT=3, LW=2, LV=1015

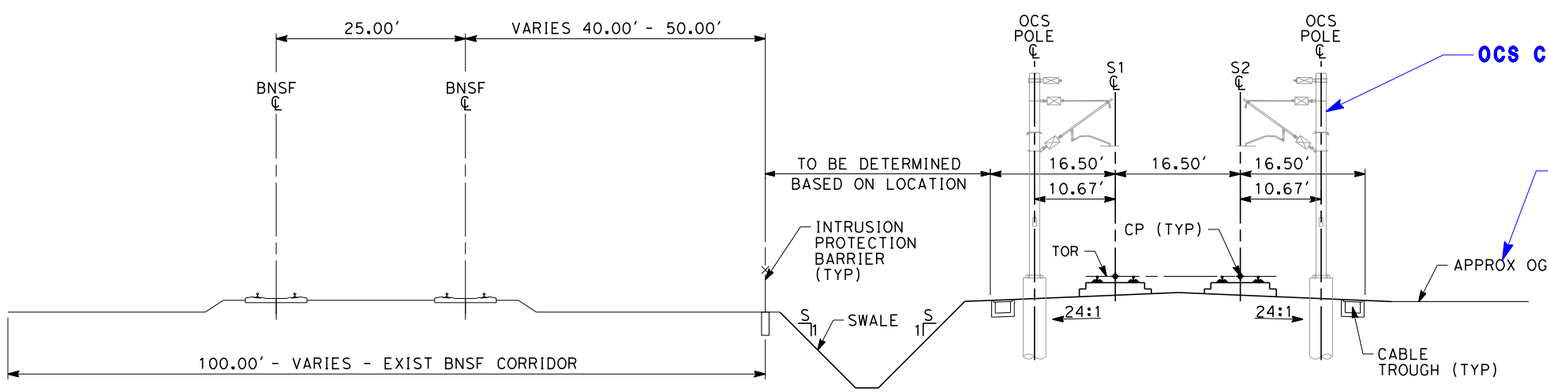

Notes and Callouts
TX=0.14 x Scale
FT=3, LW=1, LV=1014

SECTION 12

"S" 606+00 TO 640+00

TWIN TRACK ADJACENT TO BNSF
80 FT HST ROW
FOR H = 0 TO 3.5 FT ABOVE OG

AC=GR-SCALE

10 0 10 20
1"=10'
SCALE APPLICABLE FOR FULL SIZE ONLY

TRACK GUIDEWAY TYPICAL SECTION SAMPLE

Sample Plan
For purposes of procurement, additional coordination is required between RC's and PMT

REV	DATE	BY	CHK	APP	DESCRIPTION

DESIGNED BY J. DOE
DRAWN BY J. DOE
CHECKED BY J. DOE
IN CHARGE J. DOE
DATE ##/##/####

CALIFORNIA HIGH-SPEED RAIL AUTHORITY

CALIFORNIA HIGH-SPEED TRAIN PROJECT
SEGMENT/PACKAGE

TRACK GUIDEWAY
TYPICAL SECTIONS

CONTRACT NO.
DRAWING NO.
SCALE AS SHOWN
SHEET NO.

04/02/2014 - RFP No.: HSR13-57

Loverdev 3/28/2014 10:48:19 AM CAHSRP-PPM.tbl CAHSR_PDF_half_black.plt c:\projectwise\pb\projectwiseint\loverdev\dms51960\04-Track-Guideway-Typ Sections-Sample.dgn

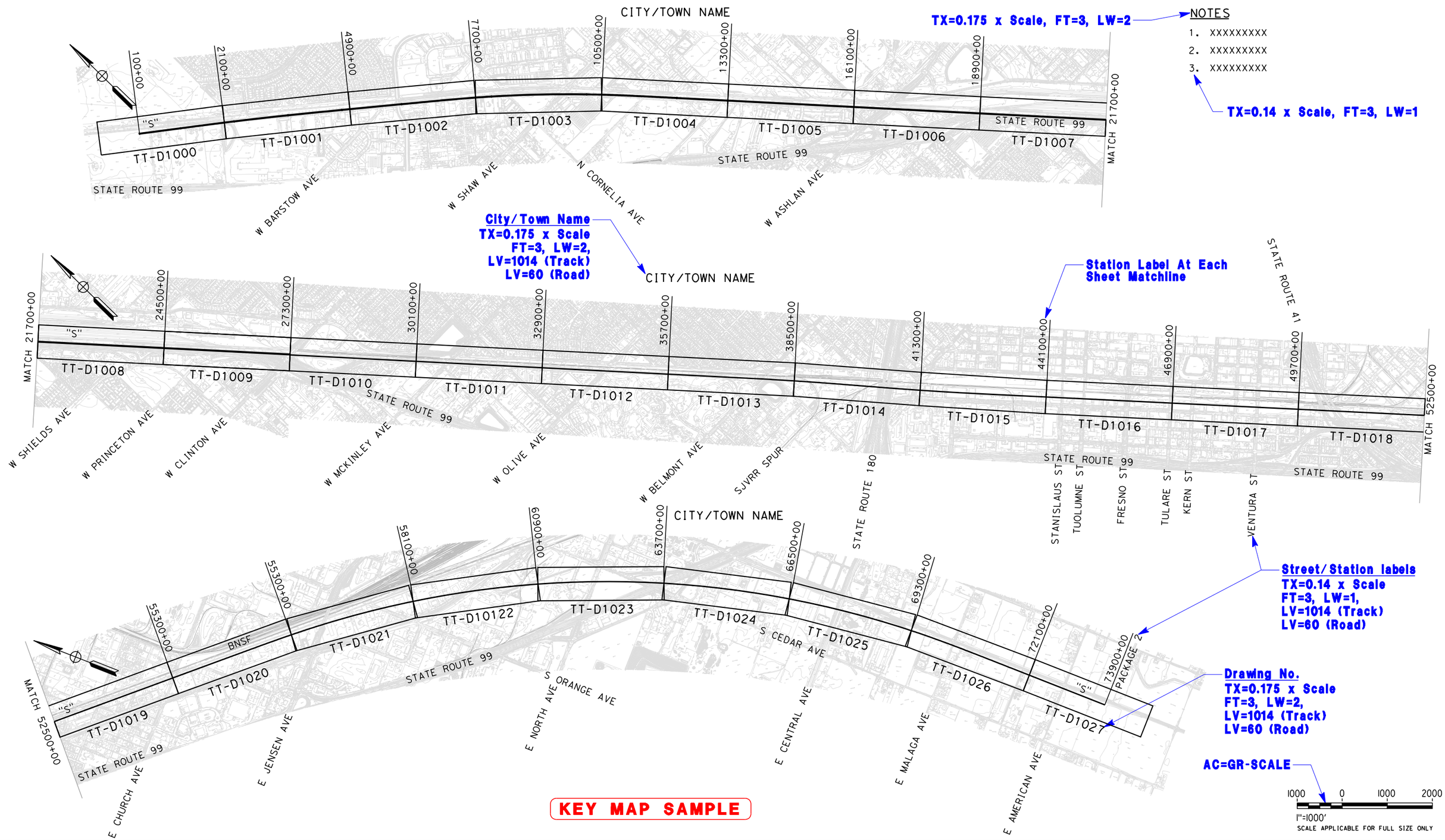

Sample Plan
For purposes of procurement, additional coordination is required between RC's and PMT

REV	DATE	BY	CHK	APP	DESCRIPTION

DESIGNED BY E. SMITH
DRAWN BY A. ROBERTS
CHECKED BY C. JOHNSON
IN CHARGE J. DOE
DATE MM/DD/YYYY

PROPOSED PRELIMINARY DESIGN

NOT FOR CONSTRUCTION

CALIFORNIA HIGH-SPEED RAIL AUTHORITY

CALIFORNIA HIGH-SPEED TRAIN PROJECT SEGMENT/PACKAGE

TRACK GUIDEWAY, TRACK STRUCTURES OR UTILITIES
KEY MAP

CONTRACT NO.
DRAWING NO.
SCALE AS SHOWN
SHEET NO.

04/02/2014 - RFP No.: HSR13-57

LaverdeV 3/28/2014 11:12:02 AM CAHSRP-PPM.tbl CHSR_PDF_half_black.pltct\projectwise\pb\projectwiseint\laverdev\dms51960\05-Track-Guideway-General-Key-Map-Sample.dgn

Exterior border
LV=1060, LW=2

Interior vertical column lines and column heading line
LV=1060, LW=1

Interior horizontal row lines
LV=1060, LW=0

TRACK GEOMETRY DATA

CURVE NO.	DESCRIPTION	BEARING	DISTANCE (ft)	STATION	NORTHING	EASTING	R (FT)	Lc (FT)	SPIRAL TYPE	Ls (FT)	Eq (IN)	Eu (IN)	V (MPH)
	POT			S3320+08.85	1903504.70	6200624.65							
	TS	S42°47'39"E	449.72	S3324+58.57	1903174.70	6200630.17							
C101	SC			S3324+83.57	1903156.35	6200947.15				25.00			
	CS			S3325+85.46	1903081.21	6201015.96	11650.00	101.89					
	ST			S3326+10.46	1903062.68	6201032.75				25.00			
	TS	S42°10'12"E	1867.49	S3344+77.95	1901678.58	6240602.80							
C102	SC			S3346+27.95	1901567.19	6202386.91				150.00			
	CS			S3352+07.33	1901125.87	6202762.20	11650.00	579.38			4 1/4		71.0
	ST			S3353+57.33	1901008.81	6202856.00				150.00			
	PT	S38°34'58"E	6641.00	S3419+98.72	1895817.18	6206997.88							
	PT	S38°35'19"E	5403.47	S3474+02.19	1891593.60	6210368.16							
	PT	S38°37'26"E	6369.91	S3537+72.09	1886614.19	6214340.71							
C103	PC	S38°37'26"E	7177.91	S3509+50.00	1881006.38	6218821.20	5730.00	238.71			4 1/4		71.0
	PT			S3611+88.71	1880823.04	6218974.01							
T.O. #24	PITO	S20°45'10"E	240.79	S4023+12.75	1846897.42	6241696.98							
	PS	S23°08'23"E	63.25	S4023+76.00	1846839.26	6241721.84							

Table Heading
TX=0.175 x Scale
LV=1060, LW=2

Table Information Text
TX=0.14 x Scale
LV=1060, LW=1

TRACK GEOMETRY DATA

CURVE NO.	DESCRIPTION	BEARING	DISTANCE (ft)	STATION	NORTHING	EASTING	R (FT)	Lc (FT)	SPIRAL TYPE	Ls (FT)	Eq (IN)	Eu (IN)	V (MPH)
	POT			S3320+08.85	1903504.70	6200624.65							
	TS	S42°47'39"E	449.72	S3324+58.57	1903174.70	6200630.17							
C101	SC			S3324+83.57	1903156.35	6200947.15				25.00			
	CS			S3325+85.46	1903081.21	6201015.96	11650.00	101.89					
	ST			S3326+10.46	1903062.68	6201032.75				25.00			
	TS	S42°10'12"E	1867.49	S3344+77.95	1901678.58	6240602.80							
C102	SC			S3346+27.95	1901567.19	6202386.91				150.00			
	CS			S3352+07.33	1901125.87	6202762.20	11650.00	579.38			4 1/4		71.0
	ST			S3353+57.33	1901008.81	6202856.00				150.00			
	PT	S38°34'58"E	6641.00	S3419+98.72	1895817.18	6206997.88							
	PT	S38°35'19"E	5403.47	S3474+02.19	1891593.60	6210368.16							
	PT	S38°37'26"E	6369.91	S3537+72.09	1886614.19	6214340.71							
C103	PC	S38°37'26"E	7177.91	S3509+50.00	1881006.38	6218821.20	5730.00	238.71			4 1/4		71.0
	PT			S3611+88.71	1880823.04	6218974.01							
T.O. #24	PITO	S20°45'10"E	240.79	S4023+12.75	1846897.42	6241696.98							
	PS	S23°08'23"E	63.25	S4023+76.00	1846839.26	6241721.84							

HORIZONTAL ALIGNMENT DATA TABLE SAMPLE

Sample Plan
For purposes of procurement, additional coordination is required between RC's and PMT

REV	DATE	BY	CHK	APP	DESCRIPTION

DESIGNED BY J. DOE
DRAWN BY J. DOE
CHECKED BY J. DOE
IN CHARGE J. DOE
DATE ##/##/####

PROPOSED PRELIMINARY DESIGN
NOT FOR CONSTRUCTION

CALIFORNIA HIGH-SPEED RAIL AUTHORITY

CALIFORNIA HIGH-SPEED TRAIN PROJECT
SEGMENT/PACKAGE

TRACK GUIDEWAY
HORIZONTAL ALIGNMENT DATA TABLE

CONTRACT NO.
DRAWING NO.
SCALE NO SCALE
SHEET NO.

04/02/2014 - RFP No.: HSR13-57

LaverdeV 3/28/2014 3:35:52 PM CAHSRP-PPM.tbl HSR_PDF_half_black.plt c:\projectwise\pb\projectwiseint\laverdev\dms51960\06-Track-Guideway-Hor-Data-Table-Sample.dgn

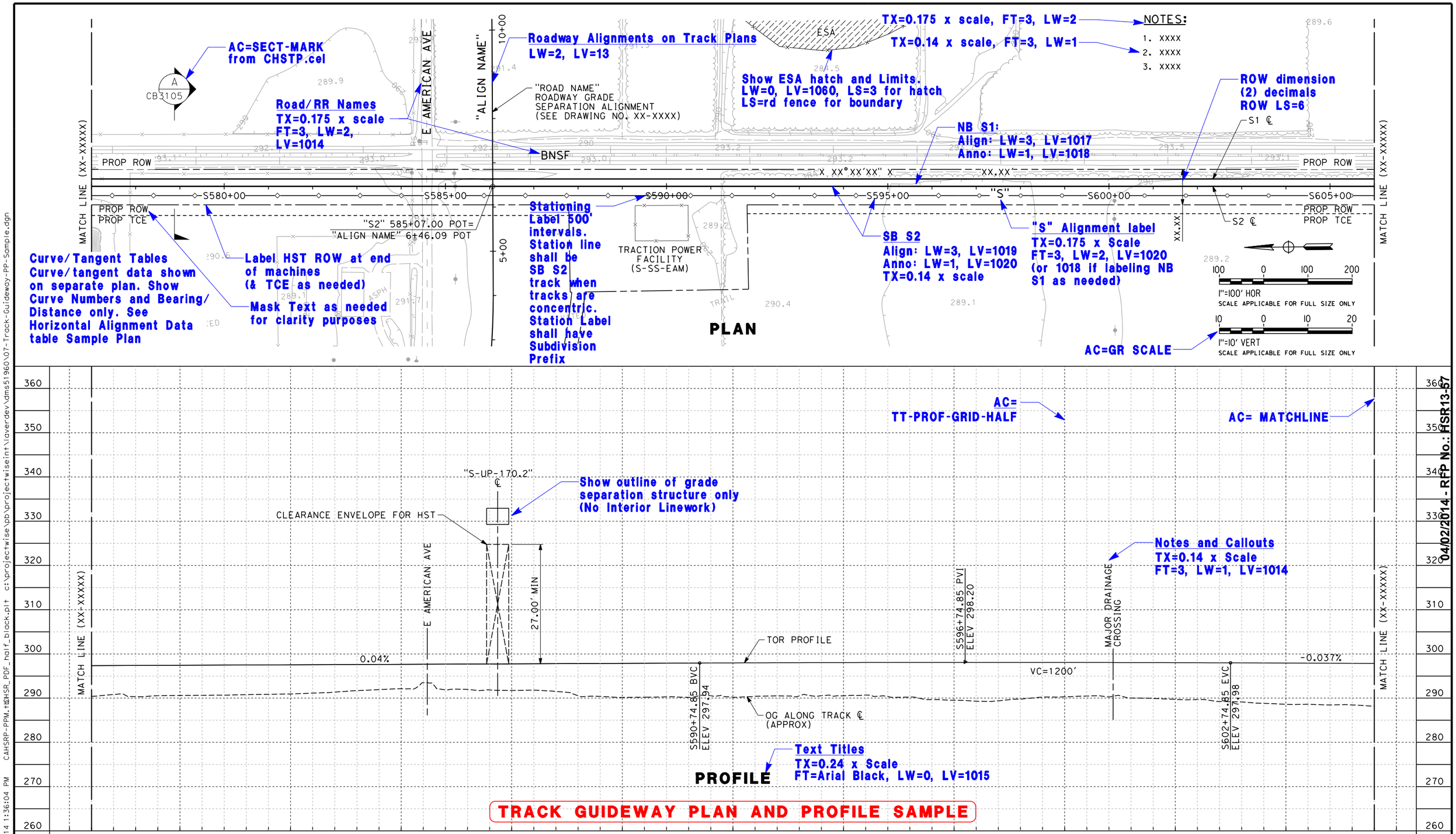

Sample Plan
For purposes of procurement, additional coordination is required between RC's and PMT

REV	DATE	BY	CHK	APP	DESCRIPTION

DESIGNED BY J. DOE
DRAWN BY J. DOE
CHECKED BY J. DOE
IN CHARGE J. DOE
DATE ##/##/####

PROPOSED PRELIMINARY DESIGN
NOT FOR CONSTRUCTION

CALIFORNIA HIGH-SPEED RAIL AUTHORITY

CALIFORNIA HIGH-SPEED TRAIN PROJECT
SEGMENT/PACKAGE

TRACK GUIDEWAY
PLAN AND PROFILE

CONTRACT NO.
DRAWING NO.
SCALE AS SHOWN
SHEET NO.

04/02/2014 - RFP No.: HSR13-57

3/28/2014 1:36:04 PM CAHSRP-PPM.tbl HSR_PDF_half_black.plt c:\projectwise\pb\projectwiseint\laverdev\dms51960\07-Track-Guideway-PP-Sample.dgn LaverdeV

TX=0.175 x scale, FT=3, LW=2
TX=0.14 x scale, FT=3, LW=1

NOTES:

1. PILE CAP AND DRILLED SHAFT DIMENSIONS TO BE DETERMINED

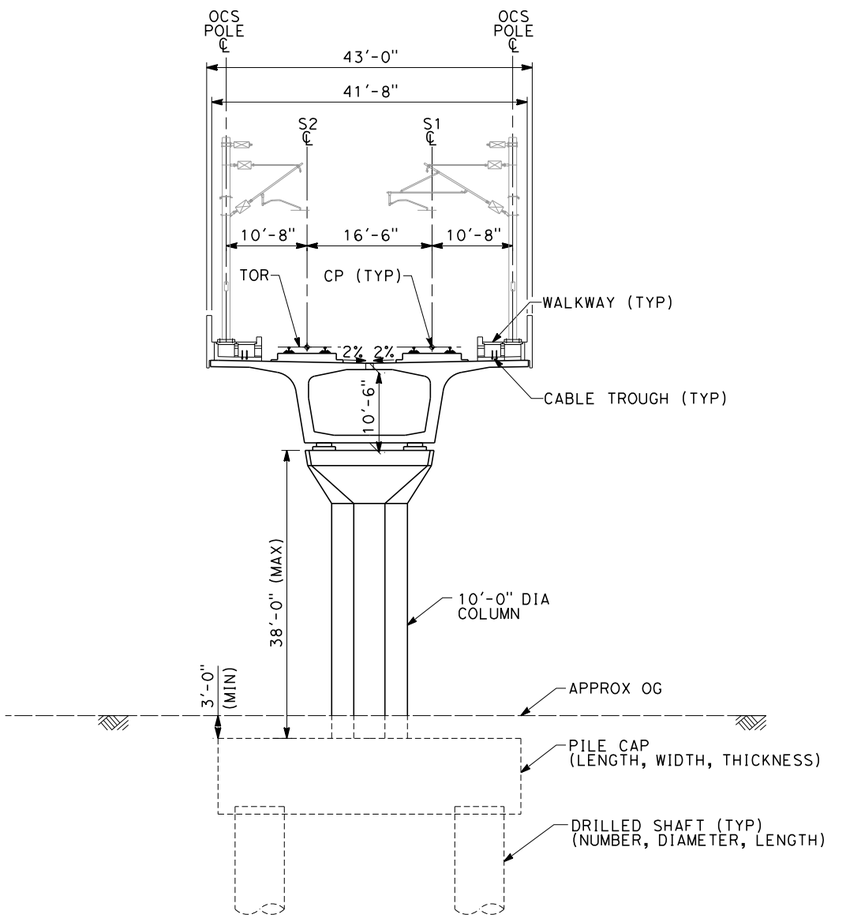

SECTION C

"S" 450+10 TO 484+50
"S" 488+40 TO 490+40
"S" 494+60 TO 496+60

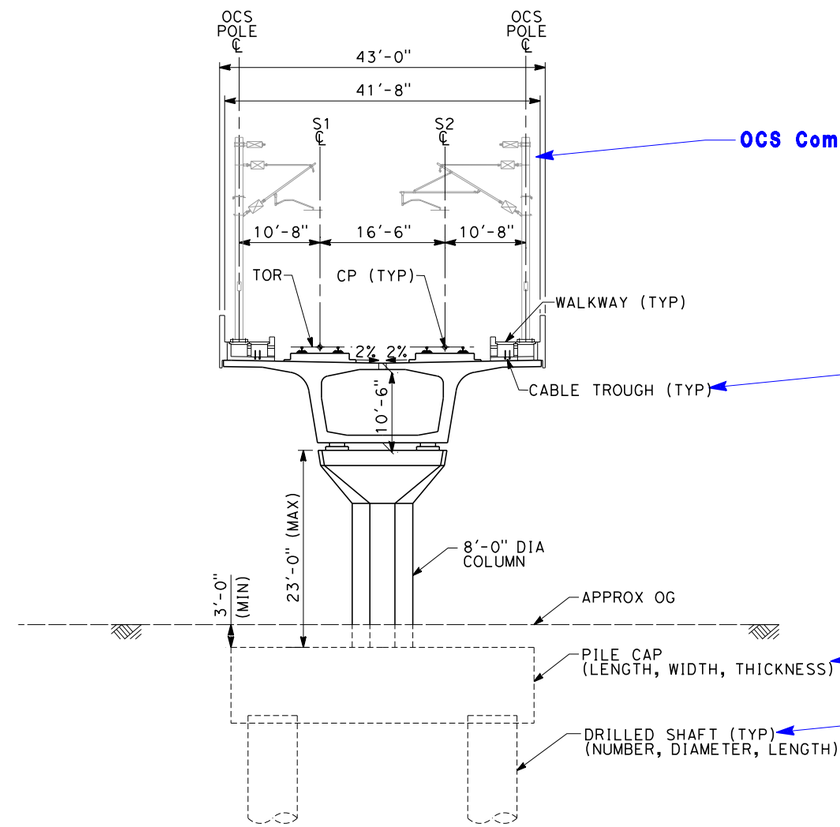

SECTION D

"S" 484+50 TO 488+40

OCS Components Color 140

Notes and Callouts
TX=0.14 x Scale
FT=3, LW=1, LV=1014

Show Length, Width and Thickness of Pile Cap

Show number of drill shafts,diameter and length

Text Titles
TX=0.24 x Scale
FT=Arial Black, LW=0, LV=1015
Subtitles
TX=0.175 x Scale
FT=3, LW=2, LV=1015

AC= GR-SCALE

10 0 10 20
1"=10'
SCALE APPLICABLE FOR FULL SIZE ONLY

TRACK STRUCTURES TYPICAL SECTION SAMPLE

Sample Plan
For purposes of procurement, additional coordination is required between RC's and PMT

REV	DATE	BY	CHK	APP	DESCRIPTION

DESIGNED BY J. DOE
DRAWN BY J. DOE
CHECKED BY J. DOE
IN CHARGE J. DOE
DATE ##/##/####

CALIFORNIA HIGH-SPEED RAIL AUTHORITY

CALIFORNIA HIGH-SPEED TRAIN PROJECT
SEGMENT/PACKAGE

TRACK STRUCTURES
TYPICAL SECTION

CONTRACT NO.
DRAWING NO.
SCALE AS SHOWN
SHEET NO.

04/02/2014 - RFP No.: HSR13-57

LaverdeV 3/28/2014 1:42:37 PM CAHSRP-PPM.tbl HSR_PDF_half_black.plt c:\projectwise\pb\projectwiseint\laverdev\dms51960\08-Track-Structures-Typ Sec-Sample.dgn

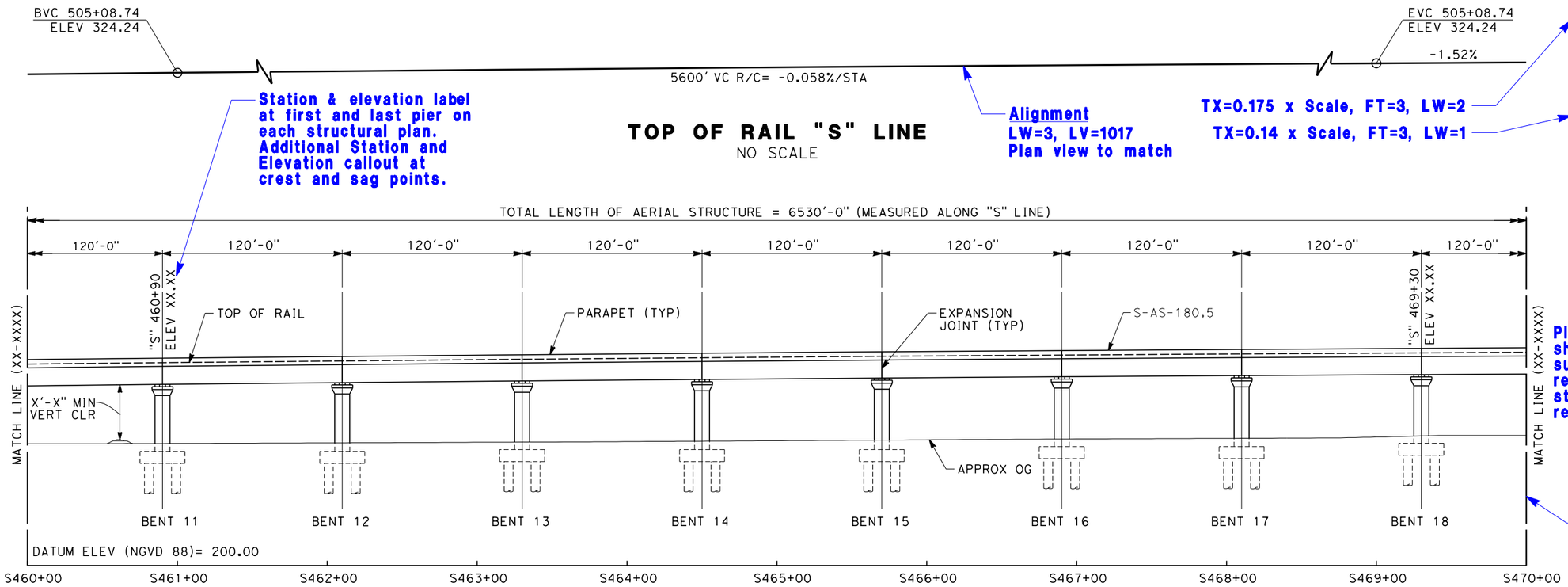

NOTES:

1. FOR DETAILS NOT NOTED, SEE DRAWING NO. SV2201
2. GRADE ELEVATIONS SHOWN ARE EQUAL TO TOP OF RAIL.
3. ALL PIERS ARE NORMAL TO THE STATION LINE UNLESS OTHERWISE SHOWN.
4. REFER TO TRACK ALIGNMENT DATA TABLE FOR CURVE AND TANGENT INFORMATION.

Place Notes #2-4 on the first sheet of structural plan. On subsequent sheet, make a note referencing back to the first structural plan sheet. Not required for each sheet.

ELEVATION
SCALE: 1" = 40'

Text Titles
TX=0.24 x Scale
FT=Arial Black, LW=0, LV=1015
Subtitles
TX=0.175 x Scale
FT=3, LW=2, LV=1015

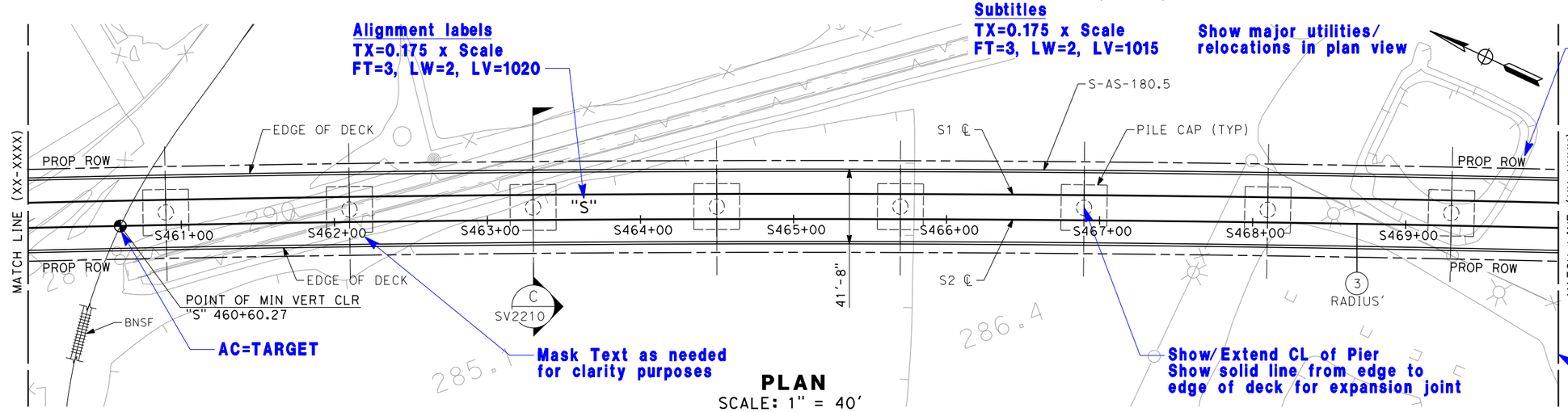

PLAN
SCALE: 1" = 40'

TRACK STRUCTURES PLAN SAMPLE

04/02/2014 - RFP No.: HSR13-57

Sample Plan
For purposes of procurement, additional coordination is required between RC's and PMT

REV	DATE	BY	CHK	APP	DESCRIPTION

DESIGNED BY J. DOE
DRAWN BY J. DOE
CHECKED BY J. DOE
IN CHARGE J. DOE
DATE ##/##/####

PROPOSED PRELIMINARY DESIGN

NOT FOR CONSTRUCTION

CALIFORNIA HIGH-SPEED RAIL AUTHORITY

CALIFORNIA HIGH-SPEED TRAIN PROJECT
SEGMENT/PACKAGE

TRACK STRUCTURES
STRUCTURAL PLAN

CONTRACT NO.
DRAWING NO. TT-D3001
SCALE AS SHOWN
SHEET NO.

LaverdeV 3/28/2014 1:48:30 PM CAHSRP-PPM.tbl CAHSR_PDF_half_black.plt c:\projectwise\pb\projectwiseint\laverdev\dms51960\09-Track-Structures-Plan-Sample.dgn

LOCATION NO.	SHEET TITLE	ROADWAY DWG NO.	DRAFT GEN. DWG NO.
1	GRADE SEPARATION - AVENUE 9	CT0001-A - CT0003-A	ST1001
2	GRADE SEPARATION - AVENUE 10	CT0004-A - CT0006-A	ST1002
3	GRADE SEPARATION - AVENUE 11	CT0007-A - CT0009-A	ST1003
4	GRADE SEPARATION - AVENUE 12	CT0010-A - CT0012-A	ST1004
5	GRADE SEPARATION - AVENUE 13	CT0013-A - CT0016-A	ST1005
6	GRADE SEPARATION - AVENUE 15	CT0017-A - CT0019-A	ST1006
7	GRADE SEPARATION - AVENUE 15 1/2	CT0020-A - CT0022-A	ST1007
8	GRADE SEPARATION - RAYMOND RD	CT0023-A - CT0025-A	ST1008
9	GRADE SEPARATION - AVENUE 17	CT0026-A - CT0028-A	ST1009
11	UNDERPASS - ROAD 26	CT0032-A - CT0034-A	ST1011
12	GRADE SEPARATION - AVENUE 21	CT0035-A - CT0037-A	ST1012
13	GRADE SEPARATION - ROAD 24	CT0038-A - CT0040-A	ST1013
14	UNDERPASS - AVENUE 24	CT0041-A - CT0043-A	ST1014
15	GRADE SEPARATION - AVENUE 26	CT0044-A - CT0047-A	ST1015
16	GRADE SEPARATION - SANTA FE AVE	CT0048-A - CT0050-A	ST1016
17	GRADE SEPARATION - BUCHANAN HOLLOW	CT0051-A - CT0053-A	ST1017
18	GRADE SEPARATION - BURCHELL AVE	CT0054-A - CT0056-A	ST1018
19	GRADE SEPARATION - PLAINSBURG RD	CT0057-A - CT0059-A	ST1019
20	GRADE SEPARATION - ARBOLEDA DR	CT0060-A - CT0062-A	ST1020
21	GRADE SEPARATION - AVENUE 22	CT0063-A - CT0065-A	ST1021

LOCATION NO.	SHEET TITLE	ROADWAY DWG NO.	DRAFT GEN. DWG NO.
22	GRADE SEPARATION - AVENUE 20	CT0066-A - CT0068-A	ST1022
23	GRADE SEPARATION - AVENUE 20 1/2	CT0069-A - CT0071-A	ST1023
24	UNDERPASS - ROAD 22	CT0073-A - CT0075-A	
25	GRADE SEPARATION - ROAD 20	CT0076-A - CT0078-A	ST1026
26	GRADE SEPARATION - ROAD 18 1/2	CT0079-A - CT0081-A	ST1027
27	GRADE SEPARATION - ROAD 16	CT0082-A - CT0084-A	ST1028
64	GRADE SEPARATION - G STREET	CT0149	ST1180
65	GRADE SEPARATION - AVENUE 7	CT0146-A - CT0148-A	ST1070
43	CALTRANS - AVENUE 8	CT2000-A - CT2003-A	ST1000
44	CALTRANS - SR 145	CT2004-A - CT2006-A	
46	LOCAL ROAD - ROAD 30 1/2	CR4000-A	
47	LOCAL ROAD - ROAD 29	CR4001-A	
48	LOCAL ROAD - AVENUE 20 1/2	CR4002-A	
49	LOCAL ROAD - SHARON	CR4003-A	
50	LOCAL ROAD - AVENUE 26	CR4004-A	
51	LOCAL ROAD - AVENUE 26	CR4005-A	
52	LOCAL ROAD - SANTA FE AVE	CR4006-A	
53	LOCAL ROAD - SANTA FE AVE	CR4007-A - CR4009-A	
54	LOCAL ROAD - SANTA FE AVE (SOUTH)	CR4009-A	
55	LOCAL ROAD - BURCHELL RD	CR4010-A	
56	LOCAL ROAD - ROAD 24	CR4011-A	
57	LOCAL ROAD - HANOVER DR	CR4012-A	
58	LOCAL ROAD - AVENUE 20 1/2	CR4013-A	
59	LOCAL ROAD - AVENUE 20 1/2	CR4014-A	
60	LOCAL ROAD - ROAD 22	CR4015-A	
66	LOCAL ROAD - WEST FRONTAGE RD	CR4016-A - CR4017-A	
67	LOCAL ROAD - ROAD 33	CR4018-A	

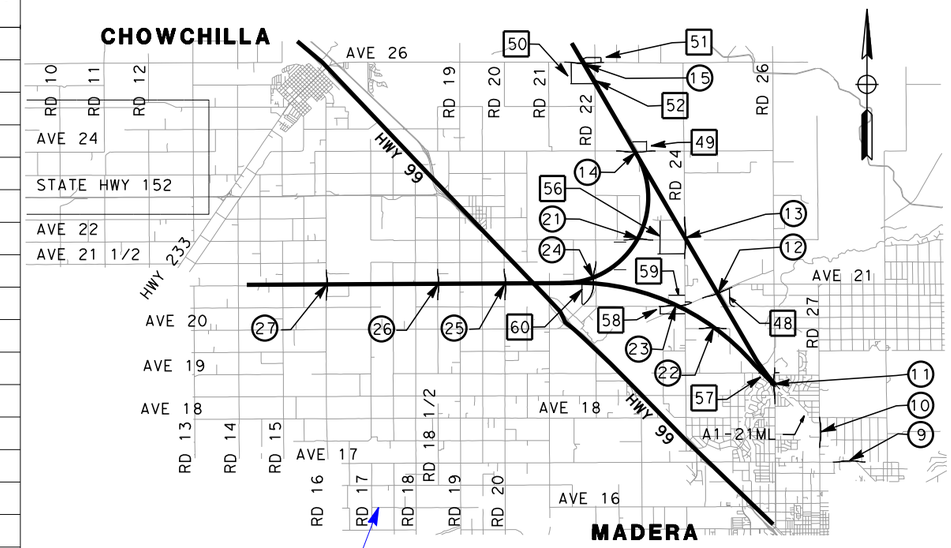

VICINITY MAP 2

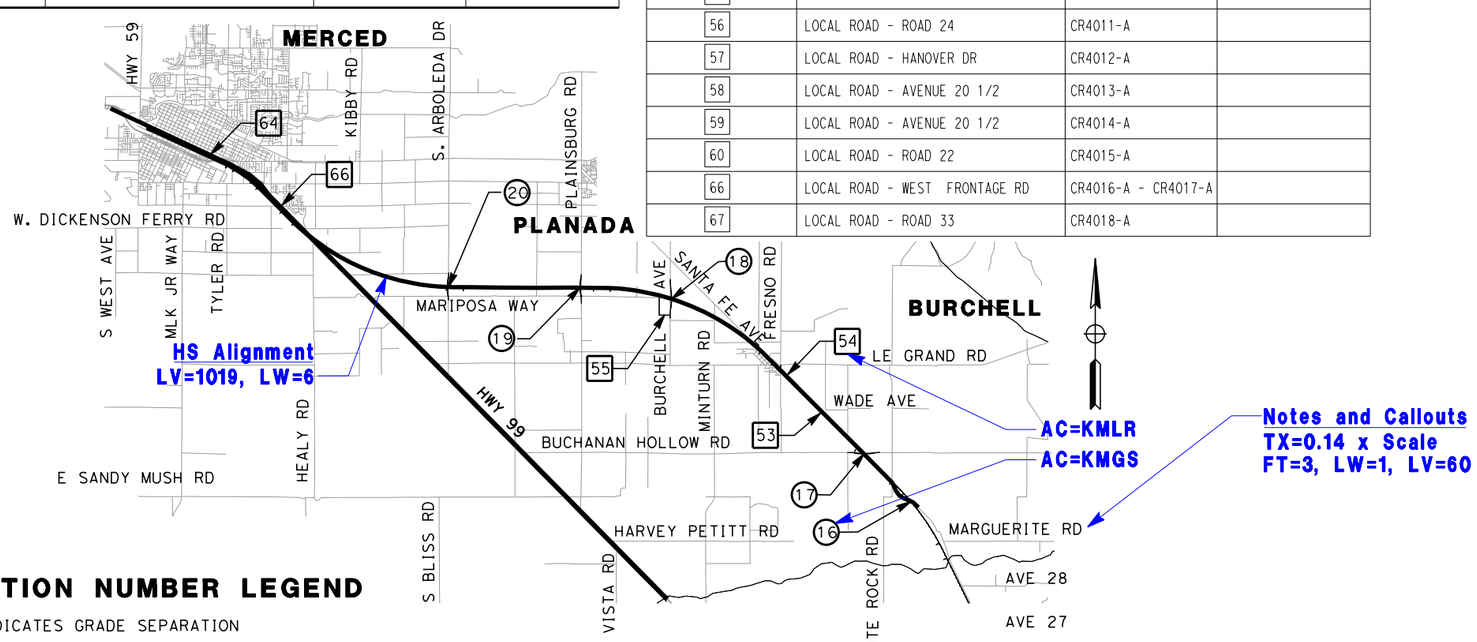

VICINITY MAP 1

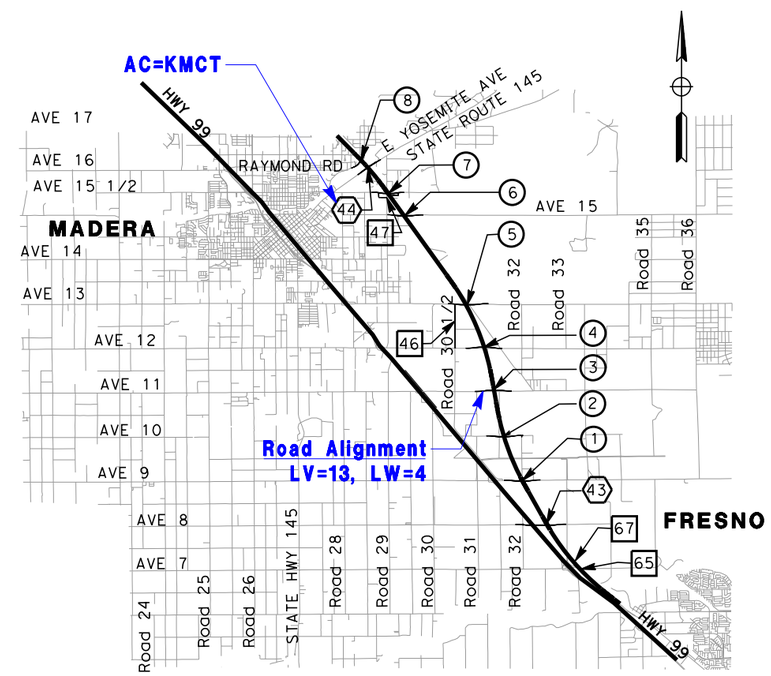

VICINITY MAP 3

LOCATION NUMBER LEGEND

- (X) - INDICATES GRADE SEPARATION
- ⟨X⟩ - INDICATES CALTRANS FACILITIES MODIFICATION
- [X] - INDICATES LOCAL ROAD RELOCATION

ROADWAY INDEX MAP SAMPLE

Sample Plan
For purposes of procurement, additional coordination is required between RC's and PMT

REV	DATE	BY	CHK	APP	DESCRIPTION

DESIGNED BY J. DOE
DRAWN BY J. DOE
CHECKED BY J. DOE
IN CHARGE J. DOE
DATE ##/##/####

PROPOSED PRELIMINARY DESIGN
NOT FOR CONSTRUCTION

PARSONS BRINCKERHOFF

CALIFORNIA HIGH-SPEED RAIL AUTHORITY

CALIFORNIA HIGH-SPEED TRAIN PROJECT
SEGMENT/PACKAGE

ROADWAY INDEX MAP

CONTRACT NO.
DRAWING NO.
SCALE NO SCALE
SHEET NO.

04/02/2014 - RFP No.: HSR13-57

Laverdev 3/28/2014 2:03:27 PM CAHSRP-PPM.tbl HSR_PDF_half_black.plt c:\projectwise\pb\projectwiseint\laverdev\dms51960\10-Roadway-Index-Map-Sample.dgn

CURVE DATA

NO.	R	Δ	T	L
1	1800.00′	16°35′52"	117.43′	262.56′
2	1800.00′	16°35′52"	172.71′	262.56′
3	1800.00′	16°35′52"	117.43′	262.56′
4	1800.00′	16°35′52"	172.71′	262.56′

LINE DATA

NO.	BEARING	DISTANCE
1	S 89°42′51" E	130.33′
2	S 89°42′51" E	587.85′
3	S 89°42′51" E	97.31′

TX=0.175 x scale, FT=3, LW=2

TX=0.14 x scale, FT=3, LW=1

NOTES:

1. XXXXXXXXX
2. XXXXXXXXX
3. XXXXXXXXX

Mask Notes as needed for clarity purposes

Left Align Tables

Road/RR Names
TX=0.175 x Scale
FT=3, LW=2, LV=23

Show TPS site with fence outline only
LS=rd-fence

Alignment labels
TX=0.175 x Scale
FT=3, LW=2, LV=1020

PROP ROW
BNSF ROW
PROP ROW
BNSF ROW

S2 ℄

S580+00

TRACTION POWER FACILITY (S-SS-EAM)

"S"

BNSF

REMOVE EXIST AT-GRADE RAILROAD CROSSING

REMOVE BASE AND SURFACING (TYP)

S CEDAR AVE

S MAPLE AVE

E AMERICAN AVE

"ALIGN NAME" 13+30.34 BC

15′ DWY

TPF ACCESS ROAD

R=#′

"ALIGN NAME" 41+00.00 PI

"ALIGN NAME" 40+03.93 EC

X′ DWY

X′ DWY

X′ DWY

15+00

R=#′

EP(TYP)

BB

S585+00

EB

"ALIGN NAME" 29+61.06 BC

40+00

35+00

20+00

40′

"ALIGN NAME"

25+00

30+00

"ALIGN NAME" 34+82.49 PRC

"ALIGN NAME" 18+51.77 PRC

"ALIGN NAME" 12+00 CONFORM

"ALIGN NAME" 41+00 CONFORM

Mask Notes as needed for clarity purposes

LIMIT OF DITCH TOE OF FILL (TYP)

COUNTY ROW

"ALIGN NAME" 23+73.21 EC

All ROW
LS=6

S-UP-170.2
"ALIGN NAME" 26+19.88 POT=
"S" 586+06.97 POT

S590+00

Station Equations
Label structure with correct nomenclature (CHSTP PPM Section 2.8.6)

Station equation btwn track alignment and roadway alignment

Notes and Callouts
TX=0.14 x Scale
FT=3, LW=1, LV=23

AC=GR-SCALE

100 0 100 200
1"=100′
SCALE APPLICABLE FOR FULL SIZE ONLY

ROADWAY GRADE SEPARATION LAYOUT SAMPLE

Sample Plan
For purposes of procurement, additional coordination is required between RC's and PMT

REV	DATE	BY	CHK	APP	DESCRIPTION

DESIGNED BY J. DOE
DRAWN BY J. DOE
CHECKED BY J. DOE
IN CHARGE J. DOE
DATE ##/##/####

CALIFORNIA HIGH-SPEED RAIL AUTHORITY

CALIFORNIA HIGH-SPEED TRAIN PROJECT
SEGMENT/PACKAGE

ROADWAY
GRADE SEPARATION LAYOUT
STREET NAME

CONTRACT NO.
DRAWING NO.
SCALE AS SHOWN
SHEET NO.

04/02/2014 - RFP No.: HSR13-57

LayerdeV 3/28/2014 2:11:16 PM CAHSRP-PPM.tbl HSR_PDF_half_black.plt c:\projectwise\pb\projectwise\int\layerdev\dms51960\11-Roadway-Grade Sep-Plan_01-Sample.dgn

TX=0.175 x scale, FT=3, LW=2

TX=0.14 x scale, FT=3, LW=1

NOTES:

1. FOR BRIDGE INFORMATION, SEE STRUCTURAL PLANS.

Mask Notes as needed for clarity purposes

Grade Separation Profile

Place on same sheet as plan view (stacked plan/profile) whenever possible

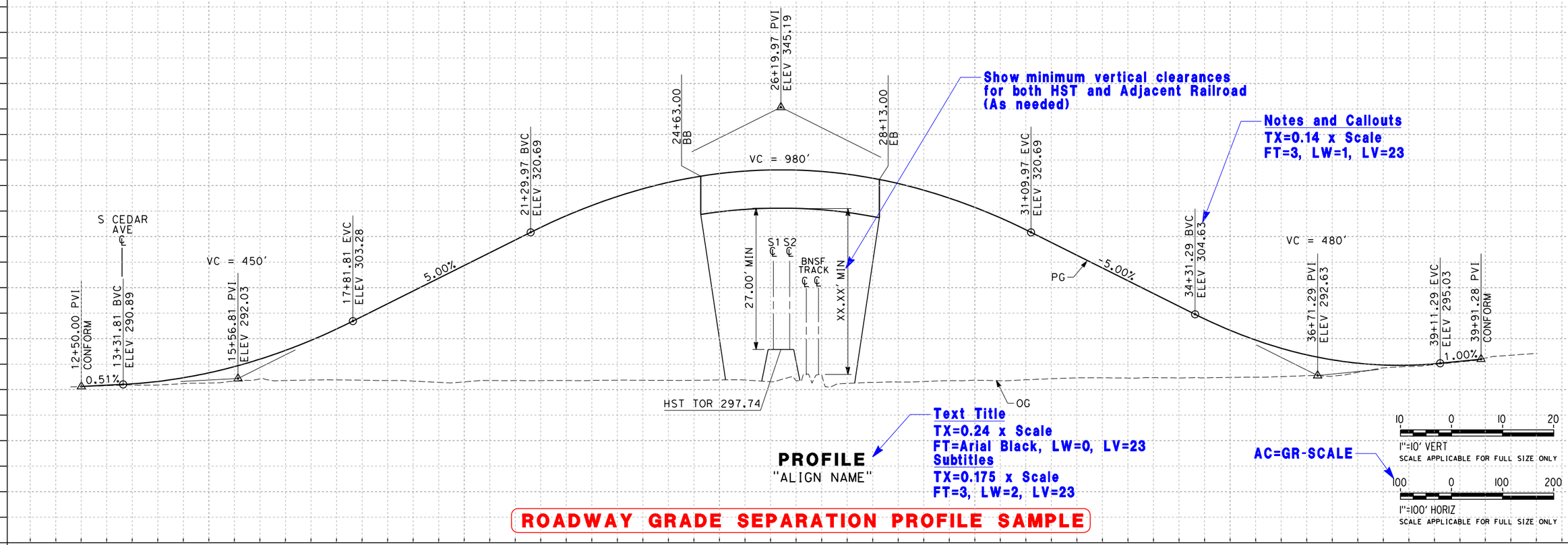

PROFILE
"ALIGN NAME"

Text Title
TX=0.24 x Scale
FT=Arial Black, LW=0, LV=23
Subtitles
TX=0.175 x Scale
FT=3, LW=2, LV=23

AC=GR-SCALE

10 0 10 20
1"=10' VERT
SCALE APPLICABLE FOR FULL SIZE ONLY

100 0 100 200
1"=100' HORIZ
SCALE APPLICABLE FOR FULL SIZE ONLY

ROADWAY GRADE SEPARATION PROFILE SAMPLE

Sample Plan
For purposes of procurement, additional coordination is required between RC's and PMT

REV	DATE	BY	CHK	APP	DESCRIPTION

DESIGNED BY	J. DOE
DRAWN BY	J. DOE
CHECKED BY	J. DOE
IN CHARGE	J. DOE
DATE	##/##/####

CALIFORNIA HIGH-SPEED RAIL AUTHORITY

CALIFORNIA HIGH-SPEED TRAIN PROJECT
SEGMENT/PACKAGE

ROADWAY
GRADE SEPARATION PROFILE
STREET NAME

CONTRACT NO.
DRAWING NO.
SCALE AS SHOWN
SHEET NO.

RFP No.: HSR13-57
04/02/2014

CAHSRP-PPM.tbl c:\projectwise\pb\projectwiseint\laverdev\dms51960\12-Roadway-Grade Sep-PF-Sample.dgn
3/28/2014 2:20:19 PM
LaverdeV

TX=0.175 x scale, FT=3, LW=2

TX=0.14 x scale, FT=3, LW=1

NOTES:

1. XXXXXXXXX
2. XXXXXXXXX
3. XXXXXXXXX

CURVE DATA

NO.	R	Δ	T	L
1	60000.00′	00°11′33"	100.83′	201.66′
2	75.00′	99°05′30"	87.96′	129.71′
3	100.00′	64°23′55"	62.97′	112.40′
4	650.00′	34°18′40"	200.66′	389.25′
5	450.00′	39°14′07"	160.39′	308.15′
6	1200.00′	04°49′12"	50.50′	100.95′

LINE DATA

NO.	BEARING	DISTANCE
1	S 89°56′26" E	2336.31′
2	S 89°44′53" E	323.21′
3	S 00°03′14" E	35.00′
4	S 80°51′16" E	112.40′
5	S 34°44′48" E	94.17′
6	S 41°06′54" E	279.44′
7	S 36°11′27" E	331.26′
8	S 41°00′38" E	351.44′

Alignment labels
TX=0.175 x Scale
FT=3, LW=2, LV=1020

ALL ROW
LS=6

Place Road Typical Section on Sheet
(If Room Permits)
Typical Sections can be placed
on seperate sheet if needed

TYPICAL SECTION

Notes and Callouts
TX=0.14 x Scale
FT=3, LW=1, LV=23

Road/RR Names
TX=0.175 x scale
FT=3, LW=2, LV=23

Mask Text as needed
for clarity purposes

RWall length
round to nearest
whole integer

AC=GR-SCALE

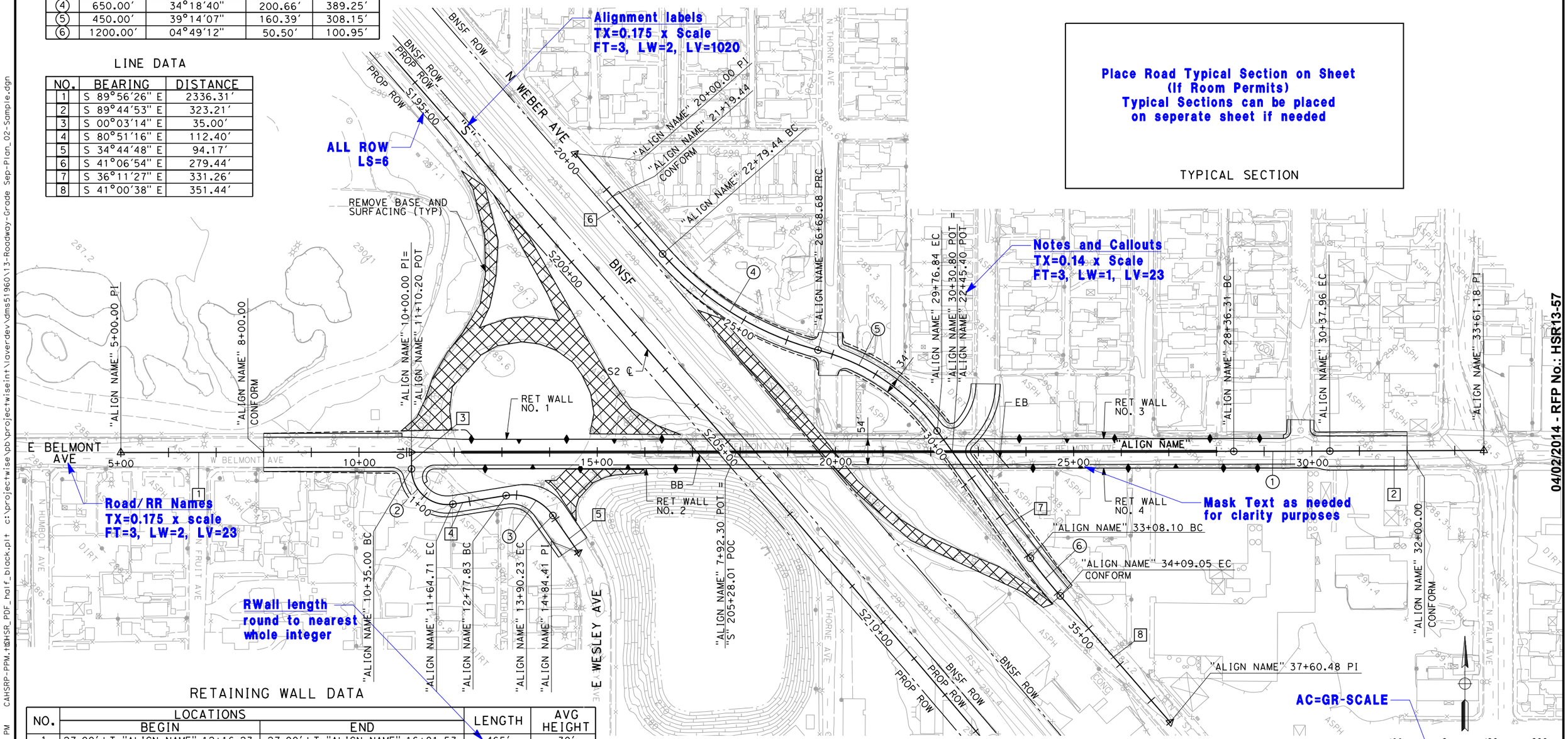

RETAINING WALL DATA

NO.	LOCATIONS BEGIN	LOCATIONS END	LENGTH	AVG HEIGHT
1	27.00′ LT "ALIGN NAME" 12+16.23	27.00′ LT "ALIGN NAME" 16+81.53	465′	30′
2	35.00′ RT "ALIGN NAME" 12+14.63	35.00′ RT "ALIGN NAME" 17+35.43	521′	30′
3	27.00′ LT "ALIGN NAME" 23+21.53	27.00′ LT "ALIGN NAME" 29+35.60	619′	30′
4	35.00′ RT "ALIGN NAME" 23+75.43	35.00′ RT "ALIGN NAME" 29+55.58	628′	30′

ROADWAY GRADE SEPARATION
LAYOUT SAMPLE 2

04/02/2014 - RFP No.: HSR13-57

Sample Plan
For purposes of procurement, additional coordination is required between RC's and PMT

REV	DATE	BY	CHK	APP	DESCRIPTION

DESIGNED BY J. DOE
DRAWN BY J. DOE
CHECKED BY J. DOE
IN CHARGE J. DOE
DATE ##/##/####

CALIFORNIA HIGH-SPEED RAIL AUTHORITY

CALIFORNIA HIGH-SPEED TRAIN PROJECT
SEGMENT/PACKAGE

ROADWAY
GRADE SEPARATION LAYOUT
STREET NAME

CONTRACT NO.
DRAWING NO.
SCALE AS SHOWN
SHEET NO.

LaverdeV 3/28/2014 2:25:13 PM CAHSRP-PPM.tbl HSR_PDF_half_black.plt c:\projectwise\pb\projectwiseint\laverdev\dms51960\13-Roadway-Grade Sep-Plan_02-Sample.dgn

TX=0.175 x scale, FT=3, LW=2

TX=0.14 x scale, FT=3, LW=1

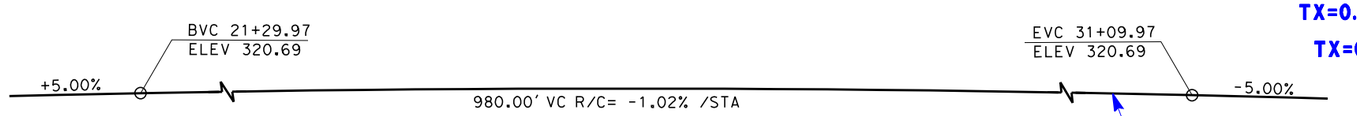

Alignment
LW=3, LV=13
Plan view to match

PROFILE GRADE
NO SCALE

NOTES:

1. CONCRETE BARRIER (TYPE 736 MODIFIED)
2. CHAIN LINK RAILING (TYPE 7 MODIFIED)
3. FUTURE UTILITY OPENING
4. GUARD RAIL, TYPE TO BE DETERMINED
5. FOR UTILITY INFORMATION, SEE UTILITY BASE MAP PLANS.

Add utility note
Show major utilities/
relocations in plan view

LEGEND:

- INDICATES DIRECTION OF TRAFFIC
- INDICATES POINT OF MINIMUM VERTICAL CLEARANCE
- INDICATES RAILROAD AND HIGH-SPEED TRAIN TRACK
- INDICATES CLEARANCE LINE

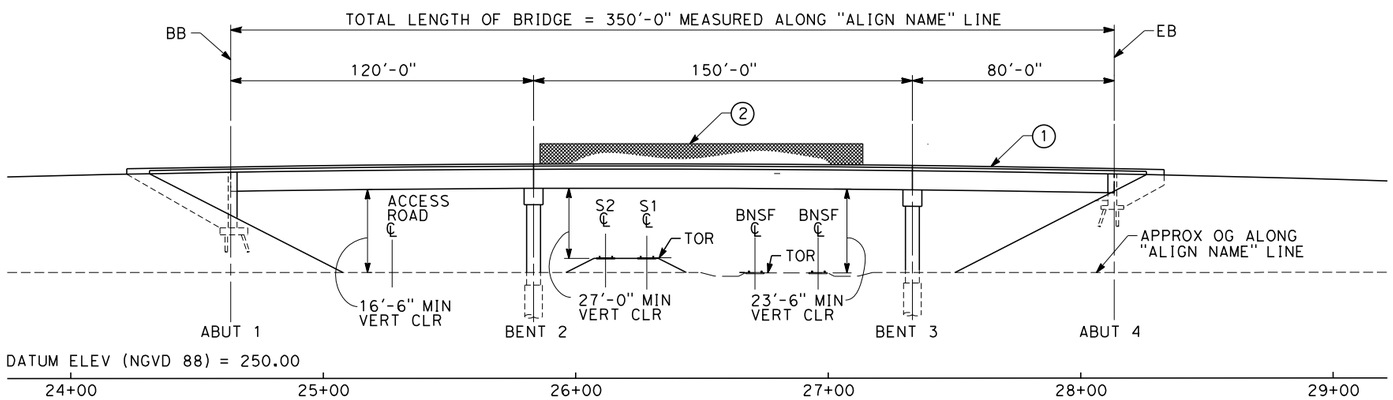

ELEVATION
SCALE: 1"=30'-0"

Alignment labels
TX=0.175 x Scale
FT=3, LW=2, LV=14

AC=TARGET

Round to the
nearest inch

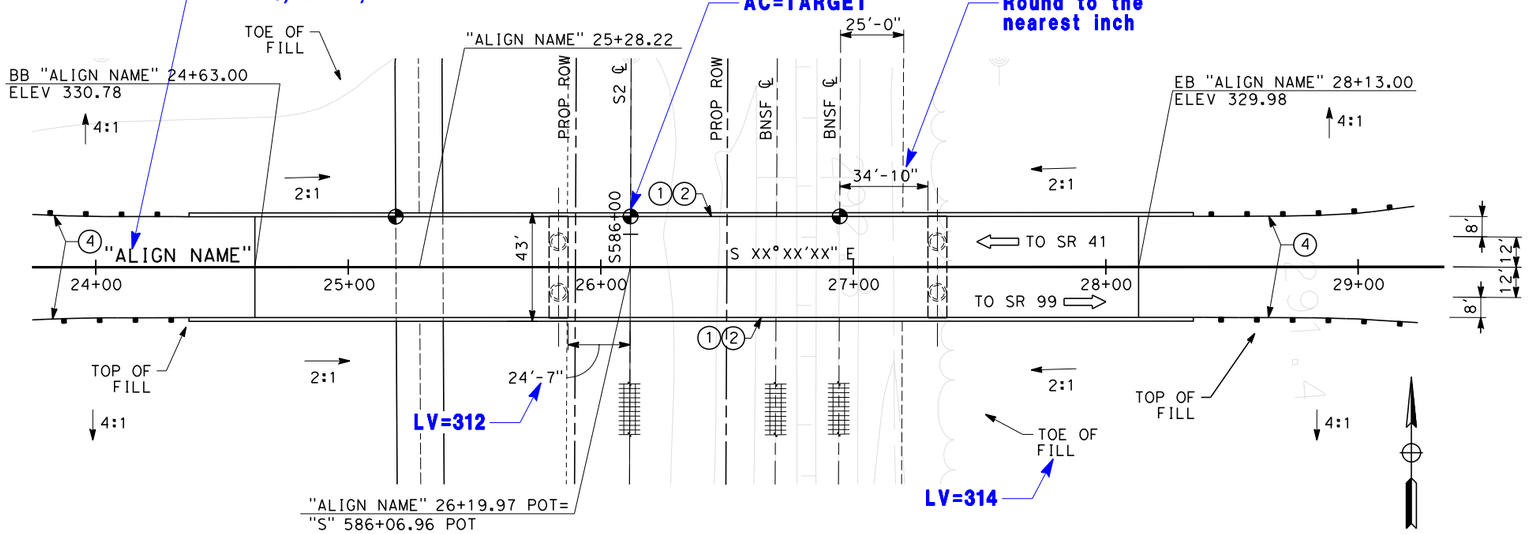

PLAN
SCALE: 1"=30'-0"

TRACK STRUCTURES/ROADWAY
DRAFT GENERAL PLAN SAMPLE

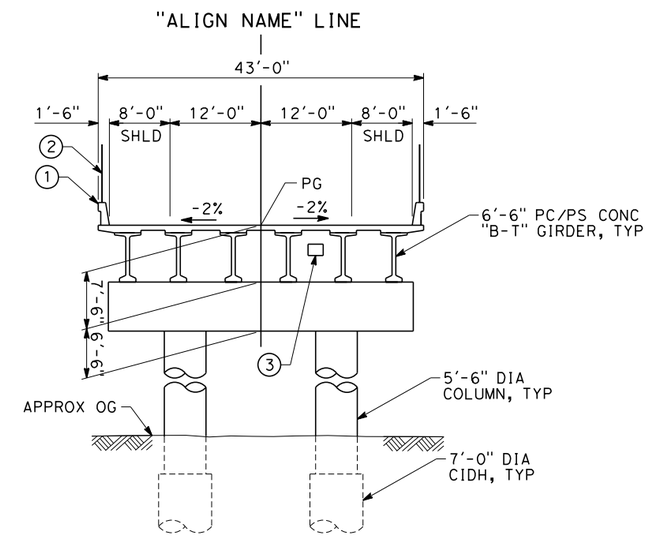

TYPICAL SECTION
SCALE: 1"=10'-0"

Text Titles
TX=0.24 x Scale
FT=Arial Black, LW=0, LV=315
Subtitles
TX=0.175 x Scale
FT=3, LW=2, LV=315

04/02/2014 - RFP No.: HSR13-57

3/28/2014 2:31:15 PM CAHSRP-PPM.tbl HSR_PDF_half_black.plt c:\projectwise\pb\projectwiseint\laverdev\dms51960\14-Roadway-Draft Gen-Plan-Sample.dgn

LaverdeV

Sample Plan
For purposes of procurement, additional coordination is required between RC's and PMT

REV	DATE	BY	CHK	APP	DESCRIPTION

DESIGNED BY J. DOE
DRAWN BY J. DOE
CHECKED BY J. DOE
IN CHARGE J. DOE
DATE ##/##/####

PROPOSED PRELIMINARY DESIGN

NOT FOR CONSTRUCTION

CALIFORNIA HIGH-SPEED RAIL AUTHORITY

CALIFORNIA HIGH-SPEED TRAIN PROJECT
SEGMENT/PACKAGE

TRACK GUIDEWAY OR ROADWAY
DRAFT GENERAL PLAN
STREET NAME

CONTRACT NO.
DRAWING NO.
SCALE
SHEET NO.

#	FACILITY	SIZE	OWNER	DISPOSITION
1	WATER LINE		CITY OF FRESNO	PROTECT IN PLACE
2	WATER LINE		CITY OF FRESNO	RELOCATE
3	SEWER LINE		CITY OF FRESNO	PROTECT IN PLACE
4	SEWER LINE		CITY OF FRESNO	RELOCATE
5	STORM DRAIN		CITY OF FRESNO	RELOCATE
6	OH TELECOM		AT&T	PROTECT IN PLACE
7	OH TELECOM		AT&T	RELOCATE
8	OH POWER		PG&E	RELOCATE
9	FIBER OPTIC		VERIZON	PROTECT IN PLACE
10	OIL		EXXON MOBIL	PROTECT IN PLACE

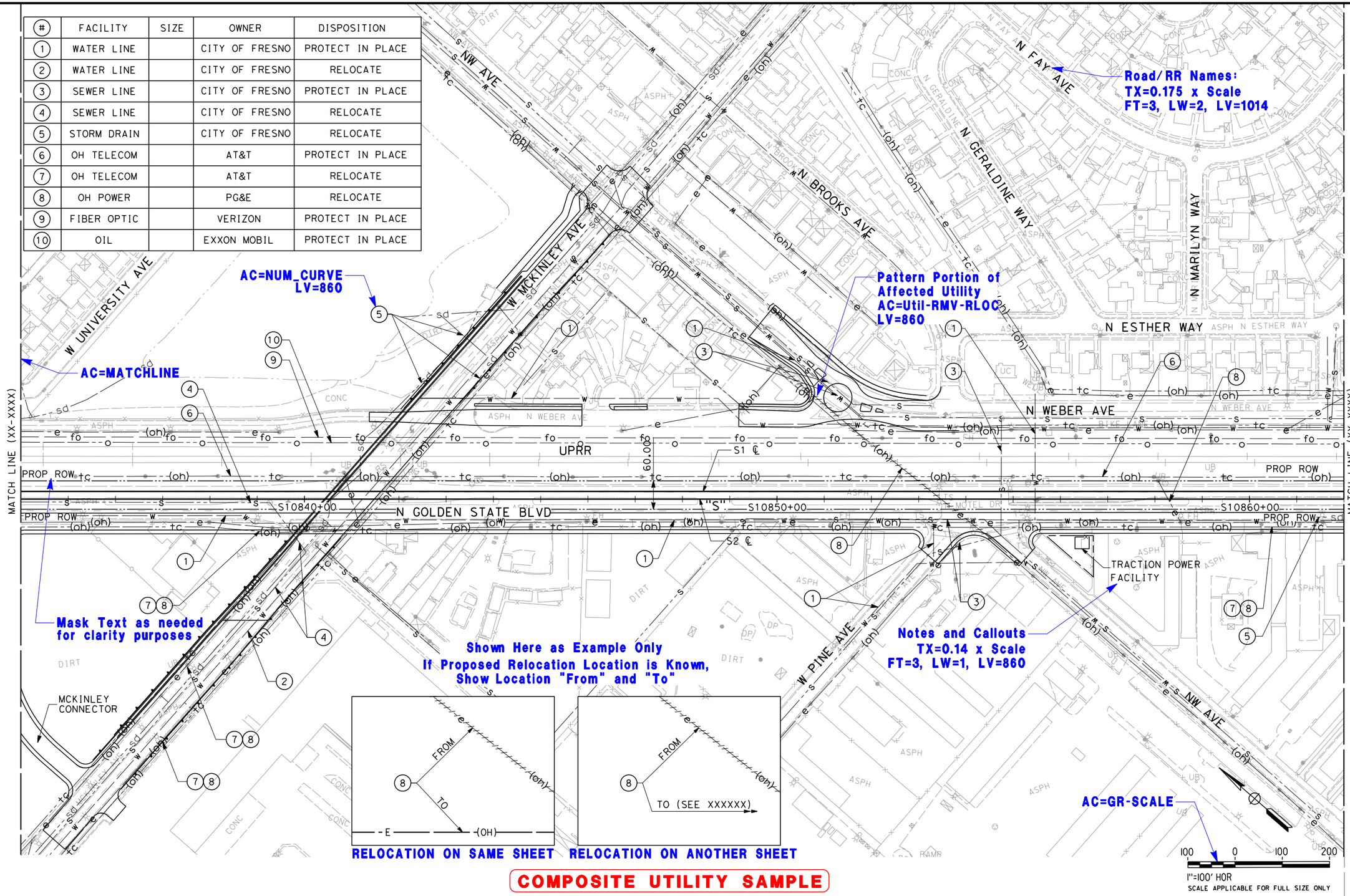

COMPOSITE UTILITY SAMPLE

Sample Plan
For purposes of procurement, additional coordination is required between RC's and PMT

REV	DATE	BY	CHK	APP	DESCRIPTION

DESIGNED BY
DRAWN BY
CHECKED BY
IN CHARGE
DATE MM/DD/YYYY

CALIFORNIA HIGH-SPEED RAIL AUTHORITY

CALIFORNIA HIGH-SPEED TRAIN PROJECT
SEGMENT/PACKAGE

UTILITIES
COMPOSITE UTILITY PLAN

CONTRACT NO.
DRAWING NO.
SCALE AS SHOWN
SHEET NO.

04/02/2014 - RFP No.: HSR13-57

LoverdeV 3/28/2014 3:15:50 PM CAHSRP-PPM.tbl CAHSR_PDF_half_black.plt c:\projectwise\pb\projectwiseint\loverdev\dms51960\15-Utility-Composite-Plan-Sample.dgn

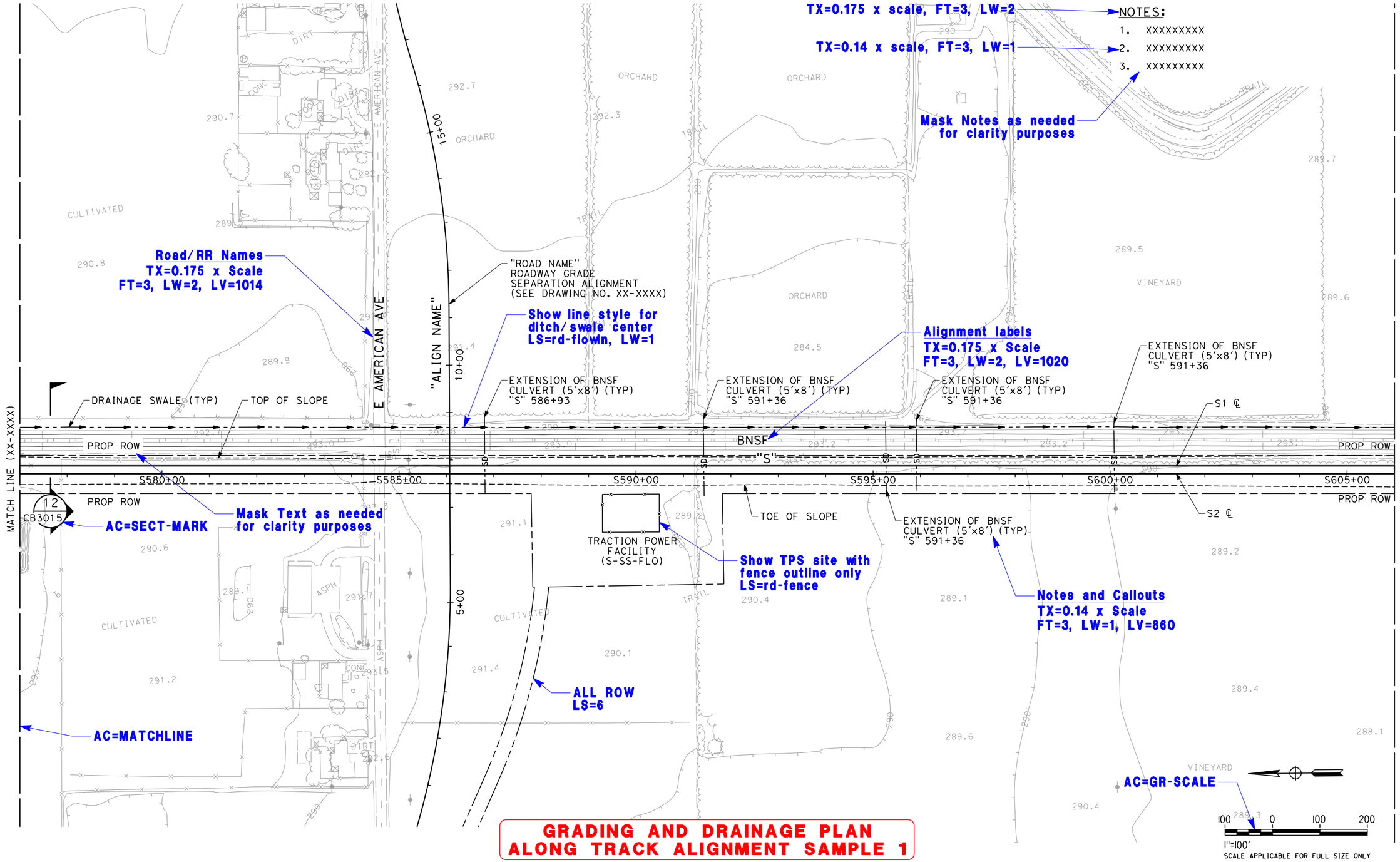

GRADING AND DRAINAGE PLAN ALONG TRACK ALIGNMENT SAMPLE 1

Sample Plan
For purposes of procurement, additional coordination is required between RC's and PMT

REV	DATE	BY	CHK	APP	DESCRIPTION

DESIGNED BY J. DOE
DRAWN BY J. DOE
CHECKED BY J. DOE
IN CHARGE J. DOE
DATE ##/##/####

PROPOSED PRELIMINARY DESIGN
NOT FOR CONSTRUCTION

PARSONS BRINCKERHOFF

CALIFORNIA HIGH-SPEED RAIL AUTHORITY

CALIFORNIA HIGH-SPEED TRAIN PROJECT
SEGMENT/PACKAGE

UTILITIES
GRADING AND DRAINAGE PLAN
ALONG TRACK ALIGNMENT

CONTRACT NO.
DRAWING NO.
SCALE AS SHOWN
SHEET NO.

04/02/2014 - RFP No.: HSR13-57

LoverdeV 3/28/2014 3:20:02 PM CAHSRP-PPM.tbl CAHSR_PDF_half_black.plt c:\projectwise\pb\projectwiseint\lavdev\dms51960\16-Utility-G&D-Plan_01-Sample.dgn

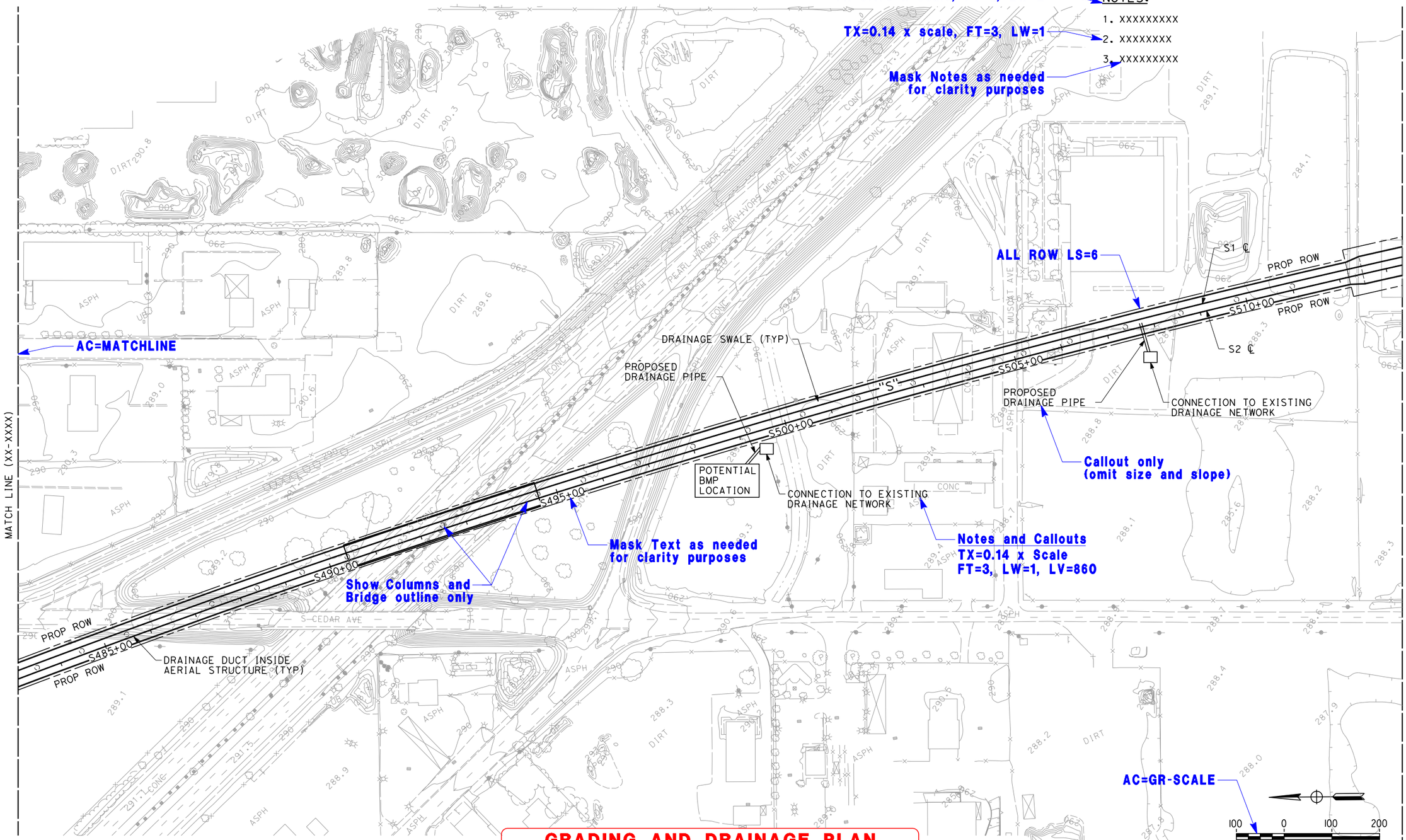

GRADING AND DRAINAGE PLAN ALONG TRACK ALIGNMENT SAMPLE 2

Sample Plan
For purposes of procurement, additional coordination is required between RC's and PMT

REV	DATE	BY	CHK	APP	DESCRIPTION

DESIGNED BY J. DOE
DRAWN BY J. DOE
CHECKED BY J. DOE
IN CHARGE J. DOE
DATE ##/##/####

PROPOSED PRELIMINARY DESIGN

NOT FOR CONSTRUCTION

CALIFORNIA HIGH-SPEED RAIL AUTHORITY

CALIFORNIA HIGH-SPEED TRAIN PROJECT
SEGMENT/PACKAGE

UTILITIES
GRADING AND DRAINAGE PLAN
ALONG TRACK ALIGNMENT

CONTRACT NO.
DRAWING NO.
SCALE AS SHOWN
SHEET NO.

04/02/2014 - RFP No.: HSR13-57

LaverdeV 3/28/2014 3:24:12 PM CAHSRP-PPM.tbl HSR_PDF_half_black.plt c:\projectwise\pp\projectwiseint\laverdev\dms51960\17-Utility-G&D-Plan_02-Sample.dgn

NOTES:

1. REFER TO ALIGNMENT SECTION FOR TRACK SIDE DRAINAGE DETAILS
2. REFER TO ROADWAY PLANS FOR ROADWAY DRAINAGE AND ROADWAY LIMITS OF GRADING
3. REFER TO UTILITY PLANS FOR UTILITY REALIGNMENTS
4. EXISTING AND PLANNED SD NETWORK TO BE CONFIRMED WITH FMFCD
5. DRAINAGE IN GRADE SEPARATION SECTIONS IS DIRECTED TOWARDS THE LOW POINT AND COLLECTED WITHIN A WET WELL, PUMPED TO EXISTING GRADE INTO A DETENTION BASIN, AND PUMPED TO THE EXISTING FMFCD SD SYSTEM

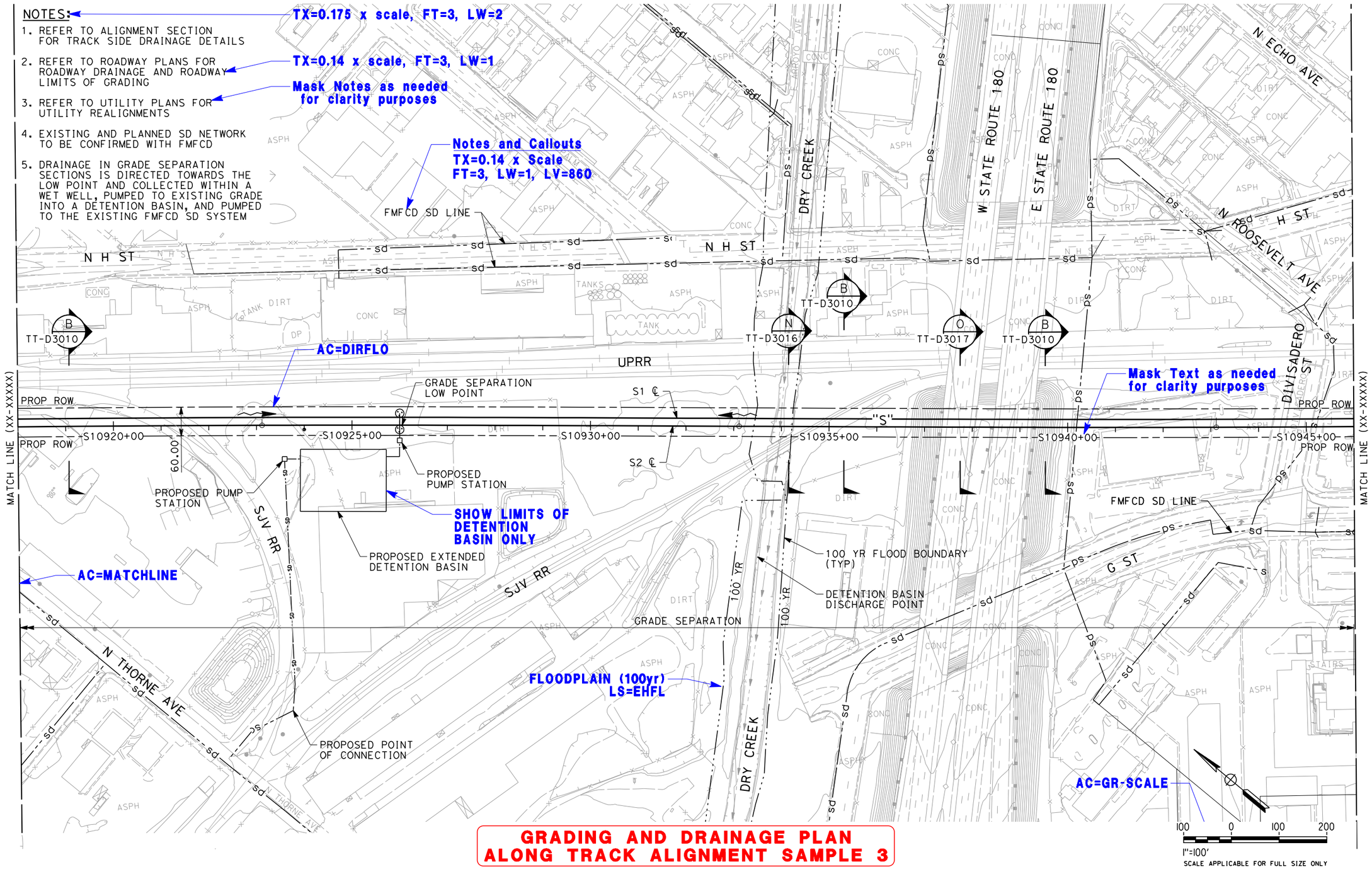

GRADING AND DRAINAGE PLAN
ALONG TRACK ALIGNMENT SAMPLE 3

Sample Plan
For purposes of procurement, additional coordination is required between RC's and PMT

REV	DATE	BY	CHK	APP	DESCRIPTION

DESIGNED BY J. DOE
DRAWN BY J. DOE
CHECKED BY J. DOE
IN CHARGE J. DOE
DATE ##/##/####

PROPOSED PRELIMINARY DESIGN
NOT FOR CONSTRUCTION

PARSONS BRINCKERHOFF

CALIFORNIA HIGH-SPEED RAIL AUTHORITY

CALIFORNIA HIGH-SPEED TRAIN PROJECT
SEGMENT/PACKAGE

UTILITIES
GRADING AND DRAINAGE PLAN
ALONG TRACK ALIGNMENT

CONTRACT NO.
DRAWING NO.
SCALE AS SHOWN
SHEET NO.

04/02/2014 - RFP No.: HSR13-57

Laverdev 3/28/2014 3:29:49 PM CAHSRP-PPM.tbl CAHSR_PDF_half_black.plt c:\projectwise\pb\projectwiseint\laverdev\dms51960\18-Utility-G&D-Plan_03-Sample.dgn

NOTES:

1. REFER TO ALIGNMENT SECTION FOR TRACK SIDE DRAINAGE DETAILS
2. REFER TO ROADWAY GRADING AND DRAINAGE PLANS FOR INFORMATION ALONG ROADWAY.
3. REFER TO UTILITY PLANS FOR UTILITY REALIGNMENTS
4. EXISTING AND PLANNED SD NETWORK TO BE CONFIRMED WITH FMFCD
5. DRAINAGE IN GRADE SEPARATION SECTIONS IS DIRECTED TOWARDS THE LOW POINT AND COLLECTED WITHIN A WET WELL, PUMPED TO EXISTING GRADE INTO A DETENTION BASIN, AND PUMPED TO THE EXISTING FMFCD SD SYSTEM

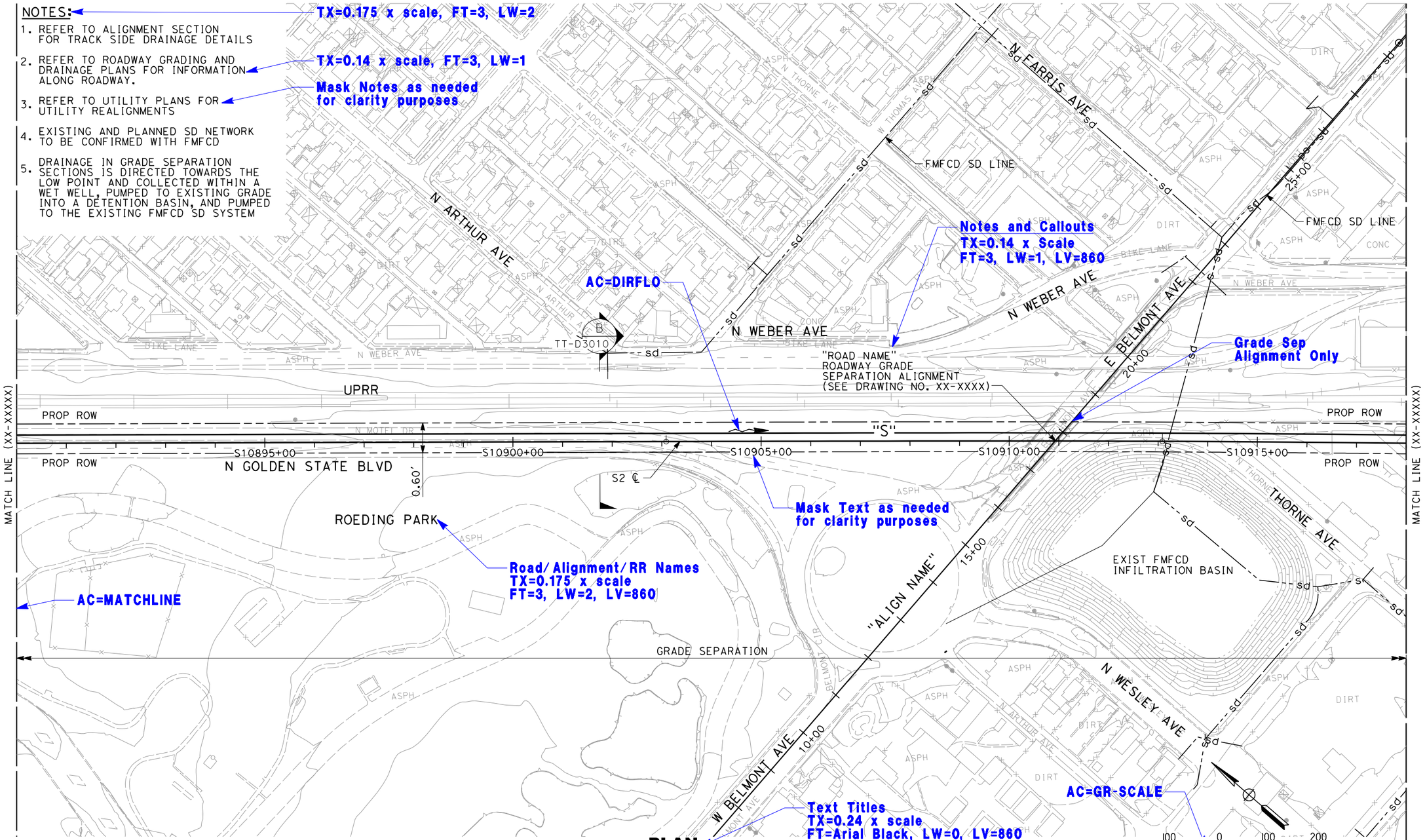

GRADING AND DRAINAGE PLAN ALONG TRACK ALIGNMENT SAMPLE 4

Sample Plan
For purposes of procurement, additional coordination is required between RC's and PMT

REV	DATE	BY	CHK	APP	DESCRIPTION

DESIGNED BY J. DOE
DRAWN BY J. DOE
CHECKED BY J. DOE
IN CHARGE J. DOE
DATE ##/##/####

PROPOSED PRELIMINARY DESIGN

NOT FOR CONSTRUCTION

CALIFORNIA HIGH-SPEED RAIL AUTHORITY

CALIFORNIA HIGH-SPEED TRAIN PROJECT
SEGMENT/PACKAGE

UTILITIES
GRADING AND DRAINAGE PLAN ALONG TRACK ALIGNMENT

CONTRACT NO.
DRAWING NO.
SCALE AS SHOWN
SHEET NO.

04/02/2014 - RFP No.: HSR13-57

LoverdeV 3/27/2014 4:51:42 PM CAHSRP-PPM.tbl&HSR_PDF_half_black.plt c:\projectwise\pb\projectwiseint\loverdev\dms51960\19-Utility-G&D-Plan_04-Sample.dgn