California High-Speed Rail Authority

RFP No.: HSR 13-57

Request for Proposals for Design-Build Services for Construction Package 2-3

Reference Material, Part C.7
Advance Planning Study Report

04/02/2014 - RFP No.: HSR 13-57

CALIFORNIA HIGH-SPEED TRAIN

Engineering Report

RECORD SET 15% DESIGN SUBMISSION

Fresno to Bakersfield

Advance Planning Study

December 2013

04/02/2014 - RFP No.: HSR 13-57

CALIFORNIA
High-Speed Rail Authority

Record Set 15% Design Submission Advance Planning Study

04/02/2014 - RFP No.: HSR 13-57

Prepared by:

URS/HMM/Arup Joint Venture

December 2013

Table of Contents

Page

1.0 Introduction....1-1
1.1 Project Overview....1-1
1.2 Project Description....1-1
1.2.1 Fresno to Bakersfield High-Speed Train Section....1-1
1.2.2 Alignments....1-1
1.2.3 Structures....1-4
2.0 General Principles....2-1
2.1 Design Assumptions....2-1
2.1.1 Survey Data....2-1
2.1.2 Utilities....2-1
2.1.3 Technical Memoranda....2-1
2.2 Span Lengths and Structure Depths....2-2
2.2.1 High-Speed Train Structures....2-2
2.2.2 Roadway Structures....2-3
2.2.3 Bridge Skews....2-3
2.3 Existing Structures....2-4
2.4 Clearances....2-4
2.4.1 High-Speed Rail....2-4
2.4.2 Private Access Roads....2-4
2.4.3 Local Authority Roadways....2-4
2.4.4 BNSF/Union Pacific Railroad....2-5
2.4.5 Expressways/Freeways....2-5
2.4.6 Levees....2-5
2.5 Third-Party Considerations....2-6
2.5.1 Westside Parkway Project....2-6
2.5.2 Centennial Corridor Project....2-6
2.5.3 BNSF Future Provision....2-6
2.5.4 State Route 43 Future-Proofing....2-6
2.5.5 Shafter City Council....2-7
2.5.6 Flood Management....2-7
2.6 Seismic Design....2-7
2.7 Construction Costs....2-8
3.0 High-Speed Train Structures....3-1
3.1 Structure Classification....3-1
3.2 Structure Types....3-1
3.2.1 Standard Aerial Viaduct....3-1
3.2.2 Balanced Cantilever....3-3
3.2.3 Half-Through Girder....3-3
3.2.4 Bathtub Beams....3-4
3.2.5 Truss....3-4
3.2.6 Elevated Slab....3-5
3.2.7 U-Trough (Grade Separation)....3-6
3.2.8 Box Culverts....3-7
3.2.9 Station Structures....3-7
3.3 Substructure/Foundation Types....3-8
3.3.1 Retaining Walls....3-8
3.3.2 Abutments....3-8
3.3.3 Aerial Viaduct Columns....3-9
3.3.4 Hammerhead Piers, Portals, and Pier Walls....3-9
3.3.5 Straddle Bents....3-11

04/02/2014 - RFP No.: HSR 13-57

3.3.6 Piled Foundations 3-12
3.4 Constraints 3-13
3.4.1 Hydrology 3-13
3.4.2 West Side Parkway/Centennial Corridor 3-15
3.4.3 Railroad Requirements 3-16
3.5 Route Description 3-18
3.5.1 Fresno 3-18
3.5.2 Hanford/Kaweah 3-18
3.5.3 Corcoran/Allensworth 3-19
3.5.4 Wasco/Shafter 3-19
3.5.5 Bakersfield 3-19
3.6 Structure Classifications and Constraints 3-20
4.0 Roadway Structures 4-1
4.1 Roadway Alignment 4-1
4.2 Structure Classification 4-4
4.3 Standard Structure Types 4-5
4.3.1 Precast/Prestressed Girders 4-5
4.3.2 Cast-in-Place Post-Tensioned Box Girder 4-6
4.3.3 Cast-in-Place Box Girder with Precast Drop-in Span 4-6
4.3.4 Prestressed Slabs 4-7
4.4 Substructures/Foundation Types 4-8
4.4.1 General 4-8
4.4.2 Abutments 4-9
4.4.3 Bents 4-10
4.4.4 Special Design: 7th Standard Road 4-11
4.5 Key Design and Site Constraints 4-13
4.5.1 Construction Staging and Traffic 4-13
4.5.2 Utilities 4-14
4.5.3 Hydraulics and Drainage 4-14
4.5.4 Hazardous Material 4-14
4.5.5 Seismic Criteria 4-14
4.5.6 Cost Estimate 4-14
4.5.7 Site Constraints 4-14
4.6 Roadway Structure Key Data and Constraints 4-17
5.0 References 5-1

Tables

Table 1.2-1 FB Alignment Subsections 1-3
Table 2.2-1 Excerpt from Caltrans Comparative Bridge Costs 2-3
Table 3.3-1 Column Diameters 3-9
Table 3.6-1 Mainline Structure Key Data and Classification 3-21
Table 3.6-2 Ancillary Structure Classification 3-27
Table 3.6-3 Mainline Structure Key Constraints 3-28
Table 3.6-4 Ancillary Structure Key Constraints 3-45
Table 4.1-1 Alignment Design Criteria 4-1
Table 4.4-1 Standard Column Sizes 4-10
Table 4.5-1 Bridge Demolition 4-13
Table 4.5-2 Standard Structure Types 4-14
Table 4.6-1 Constraints: HST Only 4-17
Table 4.6-2 Constraints: HST and Freight 4-22

04/02/2014 - RFP No.: HSR 13-57

Table 4.6-3 Constraints: HST, Freight and Roads 4-22
Table 4.6-4 Constraints: HST and Roads 4-36
Table 4.6-5 Constraints: Roads or Canals Only 4-36

Figures

Figure 1.2-1 Overview of Alignments 1-2
Figure 3.2-1 Typical Section of Standard Aerial Viaduct 3-2
Figure 3.2-2 Typical Elevation of Standard Viaduct Spans 3-2
Figure 3.2-3 Typical Elevation of Balanced Cantilever Viaduct Spans 3-3
Figure 3.2-4 Typical Section of Bathtub Beam Arrangement 3-4
Figure 3.2-5 Typical Elevation of Truss Structures 3-5
Figure 3.2-6 Typical Section of Elevated Slab 3-6
Figure 3.2-7 Typical Section of Unbraced U-Trough 3-6
Figure 3.2-8 Typical Section at Station with Track Crossovers 3-7
Figure 3.2-9 Typical Section at Station 3-8
Figure 3.3-1 Typical Section at Station with Platforms 3-8
Figure 3.3-2 Typical Section of Hammerhead Pier 3-10
Figure 3.3-3 Typical Section of Pier Wall 3-11
Figure 3.3-4 Typical Straddle Bent Sections 3-12
Figure 3.4-1 Cole Slough – Levee Clearance Constraints 3-14
Figure 3.4-2 Dutch John Cut – Levee Clearance Constraints 3-15
Figure 3.4-3 Truxtun Avenue – Span Arrangement 3-16
Figure 3.4-4 Intrusion Protection Barriers in Shared Corridor (TM 2.1.7) 3-17
Figure 4.3-1 Typical Section of Precast/Prestressed I-Girders 4-5
Figure 4.3-2 Typical Section of CIP Post-Tensioned Box Girder 4-6
Figure 4.3-3 Typical Section of CIP Box Girder with Vertical Stems 4-7
Figure 4.3-4 Typical Section of Drop-in Span over BNSF 4-7
Figure 4.3-5 CIP Prestressed Slab 4-8
Figure 4.3-6 Precast Prestressed Voided Slab 4-8
Figure 4.4-1 Short Seat Abutment 4-9
Figure 4.4-2 Tall Cantilever Abutment 4-9
Figure 4.4-3 Typical Bent Section with Single Column 4-10
Figure 4.4-4 Typical Bent Section with Multiple Columns 4-11
Figure 4.4-5 Typical Section through Salvage Pile Cap 4-13

04/02/2014 - RFP No.: HSR 13-57

List of Abbreviations

AASHTO	American Association of State Highway and Transportation Officials
AR	Access Restriction
Authority	California High-Speed Rail Authority
Caltrans	California Department of Transportation
CHSTP	California High-Speed Train Project
FB	Fresno to Bakersfield
HSR	high-speed rail
HST	high-speed train
MCE	maximum considered earthquake
OPE	operating basis earthquake
PMT	Project Management Team
RC	reinforced concrete
SJVR	San Joaquin Valley Railroad
SR	State Route
TM	technical memorandum
UPRR	Union Pacific Railroad
USACE	United States Army Corps of Engineers

04/02/2014 - RFP No.: HSR 13-57

Section 1.0

Introduction

1.0 Introduction

1.1 Project Overview

In 1996, the State of California established the California High-Speed Rail Authority (Authority). The Authority is responsible for studying alternatives to construct a rail system that will provide intercity high-speed train (HST) service on over 800 miles of track throughout California. This rail system will connect the major population centers of Sacramento, the San Francisco Bay Area, the Central Valley, Los Angeles, the Inland Empire, Orange County, and San Diego. The Authority is coordinating the project with the Federal Railroad Administration. The California High-Speed Train Project (CHSTP) is envisioned as a state-of-the-art, electrically powered, high-speed, steel-wheel-on-steel-rail technology that will include state-of-the-art safety, signaling, and automated train-control systems.

The statewide CHSTP has been divided into a number of sections for the planning, environmental review, coordination, and implementation of the project. This *Advance Planning Study* is focused on the section of the CHSTP between Fresno and Bakersfield, specifically between the CHSTP stations in downtown Fresno and downtown Bakersfield. During the initial planning process, the CHSTP alignment alternatives are dynamic and subject to revision.

1.2 Project Description

1.2.1 Fresno to Bakersfield High-Speed Train Section

The proposed Fresno to Bakersfield (FB) Section of the HST is approximately 114 miles long and traverses a variety of land uses, including farmland, large cities, and small cities. The FB Section includes viaducts and segments where the HST will be on embankment or in cut. The route of the FB Section passes by or through the rural communities of Bowles, Laton, Armona, and Allensworth and the cities of Fresno, Hanford, Selma, Corcoran, Wasco, Shafter, McFarland, and Bakersfield.

The FB Section extends from north of Stanislaus Street in Fresno to the northernmost limit of the Bakersfield to Palmdale Section of the HST at Oswell Street in Bakersfield.

1.2.2 Alignments

The FB HST Section, shown in Figure 1.2-1, is a critical link connecting the northern HST sections of Merced to Fresno to the southern HST sections of Bakersfield to Palmdale and Palmdale to Los Angeles. The FB Section includes HST stations in the cities of Fresno and Bakersfield, with a third potential station in the vicinity of Hanford. The Fresno and Bakersfield stations are this section's project termini.

The FB Section of the HST is generally divided into the following subsections with alignment prefixes. Table 1.2-1 and Figure 1.2-1 illustrate the subsections and their corresponding alignments.

04/02/2014 - RFP No.: HSR 13-57

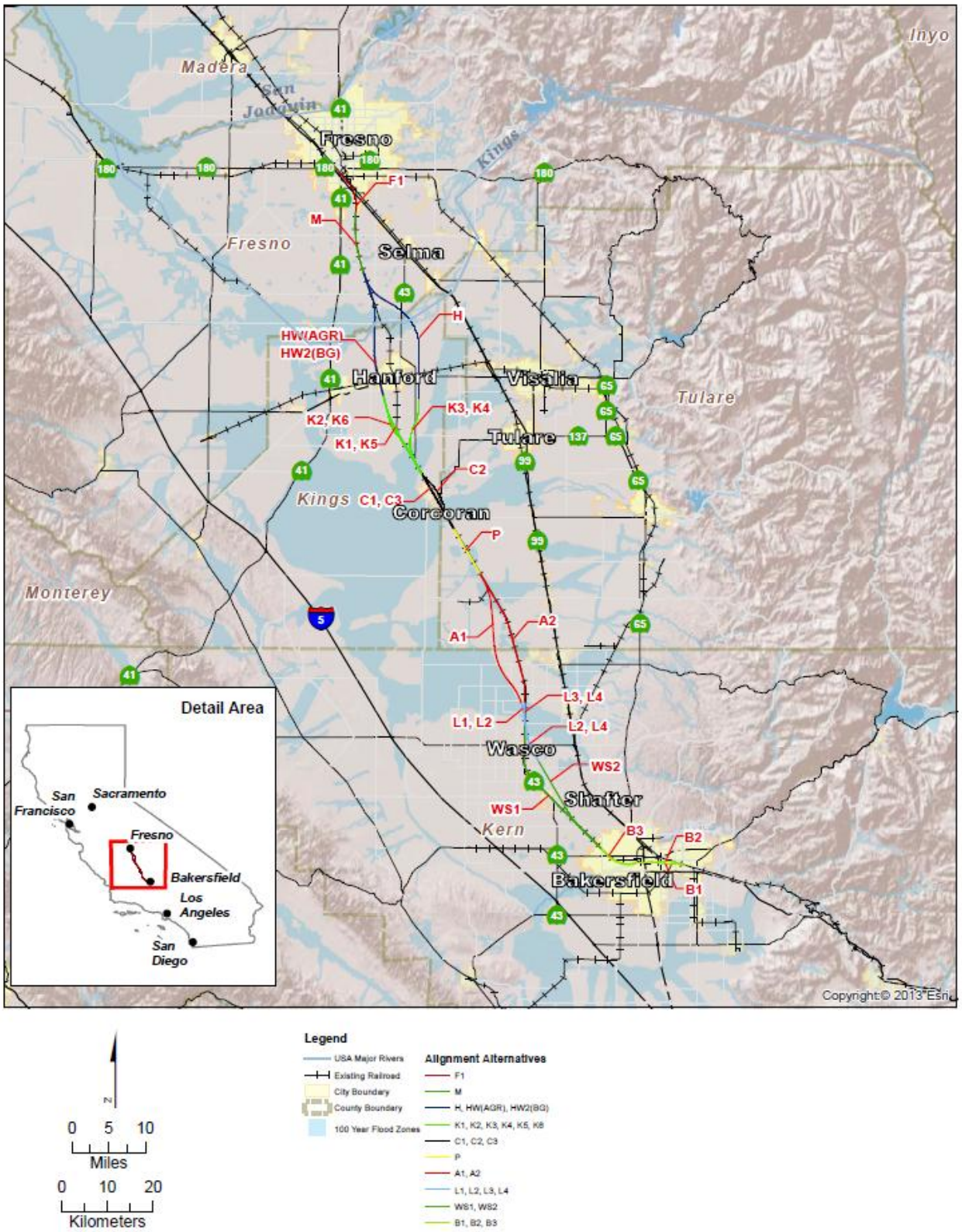

Figure 1.2-1
Overview of Alignments

CALIFORNIA High-Speed Rail Authority

04/02/2014 - RFP No.: HSR 13-57

Table 1.2-1
FB Alignment Subsections

Alignment Prefix	Alignment Subsection Name	Location		County	EIR/EIS* Name
		Begin	End		
F1	Fresno	San Joaquin St	E Lincoln Ave	Fresno	Fresno (BNSF)
M	Monmouth	E Lincoln Ave	E Kamm Ave	Fresno	Monmouth (BNSF)
H	Hanford	E Kamm Ave	Iona Ave	Fresno and Kings	Hanford East (BNSF)
HW	Hanford West Bypass	E Kamm Ave	Idaho Ave		Hanford West Bypass 1 & 2 RDEIR/SEIS Alternative
HW2	Hanford West Bypass	E Kamm Ave	Iona Ave		Hanford West Bypass 2 (Below-Grade)
K1	Kaweah	Idaho Ave	Nevada Ave	Kings	Kaweah Bypass 1 Alternative
K2		Idaho Ave	Nevada Ave		Kaweah Bypass 2 Alternative
K3		Iona Ave	Nevada Ave		Kaweah Bypass 3 Alternative
K4		Iona Ave	Nevada Ave		Kaweah (BNSF)
K5		Iona Ave	Nevada Ave		Kaweah Bypass 5 Alternative
K6		Iona Ave	Nevada Ave		Kaweah Bypass 6 Alternative
C1	Corcoran	Nevada Ave	Ave 128	Kings and Tulare	Corcoran (BNSF)
C2	Corcoran Bypass	Nevada Ave	Ave 128		Corcoran Bypass Alternative
C3	Corcoran	Nevada Ave	Ave 128		Corcoran Elevated Alternative
P	Pixley	Ave 128	Ave 84	Tulare	Pixley (BNSF)
A1	Allensworth Bypass	Ave 84	Elmo Hwy	Tulare and Kern	Allensworth Bypass Alternative
A2	Through Allensworth	Ave 84	Elmo Hwy		Through Allensworth (BNSF)
L1	Poso Creek	Elmo Hwy	Whisler Rd	Kern	Poso Creek
L2		Elmo Hwy	Poplar Ave		Poso Creek 2 Alternative

04/02/2014 - RFP No.: HSR 13-57

Alignment Prefix	Alignment Subsection Name	Location		County	EIR/EIS* Name
		Begin	End		
L3		Elmo Hwy	Whisler Rd		Poso Creek 3 Alternative (BNSF)
L4		Elmo Hwy	Poplar Ave		Poso Creek 4 Alternative
WS1	Through Wasco-Shafter	Whisler Rd	Hageman Rd	Kern	Through Wasco-Shafter (BNSF)
WS2	Wasco-Shafter Bypass	Poplar Ave	Hageman Rd		Wasco-Shafter Bypass Alternative
B1	Bakersfield Urban	Hageman Rd	Oswell St	Kern	Bakersfield Urban Alternative (BNSF)
B2	Bakersfield Urban	Hageman Rd	Oswell St		Bakersfield Urban South
B3	Bakersfield Urban	Hageman Rd	Oswell St		Bakersfield Urban Hybrid Alternative

*Environmental Impact Report/Statement

1.2.3 Structures

Of the 114-mile FB Section, as much as 30% of the HST mainline will be carried on structure. Alignments are typically elevated to clear obstacles such as existing railroads, roadways, and waterways, but elevated structures may also be proposed in floodways or as an effort to reduce impacts on nearby properties.

The majority of elevated structures will be in the form of aerial viaducts, composed of a standard design of prestressed concrete (PC) box girders. In locations where it is not practical to use the standard box girder type, other structural types have been proposed, such as trusses, balanced cantilevers, and elevated slabs. The reasoning for using each type is discussed further in section 3.2.

In circumstances where the proposed mainline will disrupt existing infrastructure routes, such as existing roadway networks, new structures are proposed to allow these networks to maintain connectivity over the HST right-of-way. Preliminary roadway realignments and roadway structure designs have been developed as part of the 15% design phase. Roadway structures are discussed further in section 4.0.

In addition to the defined roadway and HST mainline structures, several ancillary structures have been addressed as part of the preliminary design. Most of these structures have been identified in order to service existing railroad lines that will be affected by the proposed HST alignment, most notably BNSF tracks and the San Joaquin Valley Railroad (SJVR).

04/02/2014 - RFP No.: HSR 13-57

Section 2.0

General Principles

2.0 General Principles

2.1 Design Assumptions

In carrying out the type selection and arrangement of structures for preliminary design, the project team considered the key aspects of the design stated in the design scope, as outlined in TM 0.1.

For bridge structures, the requirements include the following:

- Structural adequacy.
- Seismic performance as specified in the technical memoranda (TMs).
- Interaction between track and structure to ensure that adequate provision is made for relative and absolute displacements between track and structure.
- Constructability and assumed construction method.
- Design economy.

2.1.1 Survey Data

For 15% design, the project team developed structures by identifying constraints using the aerial photography and topographic survey data. Since the surveys were taken, it is likely that development in some portions of the section has taken place, which has not been taken into consideration in the preparation of the 15% design unless supplementary information has been obtained. These unforeseen developments may add, shift, or remove constraints and require revision of the structural proposals illustrated in the preliminary design drawings. Major infrastructure developments by third-party agencies have been considered wherever possible (see section 2.3).

Clearances are measured to the existing ground level as identified by the survey data available. In the absence of more information or accurate survey data, it has been assumed that levels taken over existing rail tracks represent the top-of-tie levels.

2.1.2 Utilities

The location of utilities is a particular concern in urban areas, such as Fresno and Bakersfield, due to the density of commercial and residential properties. Where known, the location of existing utilities has been considered during the preliminary design process to identify problematic areas and locations where diversions may be necessary.

2.1.3 Technical Memoranda

Design criteria for the development of structures for 15% design have been provided in the form of Technical Memoranda (TM's). These memoranda present design guidance to ensure that preliminary designs comply with the applicable state and federal regulations, as well as project-specific design criteria.

A list of the most relevant TMs used during the preliminary design of HST and roadway structures has been provided in the References section of this report.

04/02/2014 - RFP No.: HSR 13-57

2.2 Span Lengths and Structure Depths

Span lengths shown on the preliminary design drawings are measured as the distances between successive expansion joints, the distance from end of beam at BB or EB, or the centerlines of the supporting columns/walls. The structural span lengths, i.e., the clear span between bearings, may be shorter than detailed on the drawings. For the purposes of preliminary design, the span is defined by the dimensions shown on the drawings.

2.2.1 High-Speed Train Structures

The standard span length for the typical aerial viaduct is 120 feet, which has been taken as the default value for viaduct spans. Where column locations are constrained due to the presence of existing roadways, railroads, properties, etc., the spans in the vicinity of the constraint may be modified to ensure that columns are located away from the constraint or to reduce the impact on the obstacle as much as practically possible.

Where it is not possible to span a constraint with the typical viaduct configuration, an alternative structure type is proposed. These types are discussed further in section 3.2.

The structure span hierarchy used, in decreasing order of preference, is as follows:

- Standard span – simply supported – 100 to 120-foot spans
- Balanced cantilever – three continuous spans – 130 to 200-foot main span (side spans may be adjusted to satisfy thermal length requirements.)
- Standard span with straddle bent – simply supported – 100 to 120-foot spans
- Non-standard span with integral straddle bent – 100 to 200-foot spans
  (Max integral straddle spans are 207′ – C1 : 184′ - WS1 : 140′ - B1, B2, B3)
  (max non-integral straddle spans are 277′ - B1, B2, B3)
- Bathtub span – single span with precast beams – up to 100-foot spans
- Half-through girder – single span with steel girders to side of track – up to 100-foot spans
- Constant depth truss – simply supported – 215 to 245-foot spans
- Variable depth truss – simply supported – 280 to 350-foot spans

(Note that spans exceeding 330ft will be used subject to the agreement of design variances.)

Structure types are selected not only based upon their ability to span the constraint, but also with consideration for the potential structural depth, to ensure that clearance envelopes are not infringed. The structural depth is taken as the distance from the top of the structural deck slab to the soffit of the girder. Additional depth may be added to allow for construction formwork and displacement of the structure where this may be of significance.

As a rule of thumb, a span-to-depth ratio of 10:1 is a conservative guide for high speed rail (HSR) bridges. This ensures that the superstructure has sufficient stiffness to avoid excessive deformations and adverse dynamic effects, while also providing adequate strength. The choice of the 10:1 ratio is also conservative for the 15% design stage for "space proofing" reasons.

Where straddle bents have been specified, either integral or non-integral, these have been sized on the basis of a 10:1 span/depth ratio by the same logic used for the main span girders.

04/02/2014 - RFP No.: HSR 13-57

Span-to-depth ratios less than 10 have been specified in certain locations where economies of scale would preclude the construction of a bespoke structural section, e.g., typical viaduct spans less than 120 feet. Ratios greater than 10 may be justified for certain structure types, such as in the case of balanced cantilever spans, due to beneficial support conditions and the variable section depth.

The assumed depth of the track support structure, measured between the HST top-of-rail level and the top of structure, is 2 feet 6 inches. This value is added to the structural depth to calculate structure to soffit dimensions. This dimension has been used throughout regardless of whether the track form will be ballasted track or slab track.

2.2.2 Roadway Structures

The optimal span-to-depth ratios for roadway structures are variable depending on the structure section chosen and the support conditions, e.g., simple or continuous. The type selection and arrangement of roadway structures has been informed by California Department of Transportation (Caltrans) Comparative Bridge Costs data, published in January 2011 (see Table 2.2-1).

Table 2.2-1
Excerpt from Caltrans Comparative Bridge Costs

STRUCTURAL SECTION	(STR. DEPTH / MAX SPAN) SIMPLE	CONTINUOUS	COMMON SPAN RANGE feet	**COST RANGE $ / Square foot	REMARKS
RC SLAB	0.06	0.045	16 - 44	100-300	THESE ARE THE MOST COMMON TYPES AND ACCOUNT FOR ABOUT 80% OF BRIDGES ON CALIFORNIA STATE HIGHWAYS.
RC T-BEAM	0.07	0.065	40 - 60	100-200	
RC BOX	0.06	0.055	50 - 120	110-180	
CIP/PS SLAB	0.03	0.03	40 - 65	90-200	
CIP/PS BOX	0.045	0.04	100 - 250	90-170	
PC/PS SLAB	0.03 (+3" AC)	0.03 (+3" AC)	20 - 50	100-250	NO FALSEWORK REQUIRED.
PC/PS	0.06 (+3" AC)	0.055 (+3" AC)	30 - 120	120-230	
BULB T GIRDER	0.05	0.045	90 - 145	120-200	
PC/PS I	0.055	0.05	50 - 120	110-190	
PC/PS BOX	0.06	0.045	120 - 200	140-250	
STRUCT STEEL I GIRDER	0.045	0.04	60 - 300	170-425	NO FALSEWORK REQUIRED.

NOTE: Removal of a box girder structure costs from $8 - $15 per square foot.

For the purpose of 15% design, the span-to-depth ratios in Table 2.2-1 are used to derive structure depths which are then rounded up to the nearest 6-inch increment to provide some flexibility in the footprint and allow for some variation to the structure during final design.

2.2.3 Bridge Skews

Where possible, bridge abutments and intermediate supports are aligned to be parallel with the under roadway/railroad. This reduces the span lengths of the structure in most cases.

The dynamic behavior of HST structures can be adversely affected by skewed supports. At crossings with high skews, it may therefore be more desirable to align the supports normal to the HST alignment to encourage more favorable dynamic behavior. Although not explicitly stated in the TMs, the Engineering Management Team has advised that HST structures with a skew angle of 15 degrees or greater should be considered as complex structures, as defined in section 3.1.

04/02/2014 - RFP No.: HSR 13-57

Skews of roadway structures are not limited by any specific project criteria but are arranged to follow design code recommendations and best engineering practice.

2.3 Existing Structures

Existing structures that will span over or be located adjacent to the HST tracks will be evaluated for structural adequacy. In these instances, the project team will coordinate with the relevant authority and/or third-party owners to assess the condition of the structures and determine whether they are suitable to be repaired or should be replaced. Any ongoing rehabilitation strategies implemented by the owner/authority will also be considered.

All structures passing over the HST mainline in the FB Section will be new structures or replacements/retrofit of existing structures. Design of these structures will consider the operation and requirements of the CHSTP, including the seismic performance requirements.

2.4 Clearances

The elevations of structures and column locations are dependent on the clearance envelopes of existing or future constraints. These envelopes vary depending on the type of the constraint and are generally stipulated by the owner of the facility or operating authority.

2.4.1 High-Speed Rail

Wherever possible, columns for overhead structures will be located outside of the HSR right-of-way. In some cases, however, where the right-of-way extends over a large area or is coincident with another major facility right-of-way, this approach may not always be feasible. For columns situated within the HST right-of-way, the required horizontal clearance to the centerline of the nearest HST track is stated in TM 2.1.7 as 25 feet. For clearances less than 25 feet, pier protection crash walls are proposed. To maintain the operational right-of-way, columns inside the HST right-of-way provide a 15-foot clearance to the right-of-way line, requiring no modifications to the drainage or access roads. For overhead structures crossing cut sections of HST, the HST access roads are located at the top of the cut section; therefore, columns are placed outside the drainage facilities. Any roadway structures that may interfere with HST operational right-of way are discussed further in Section 4.

The vertical clearance for structures spanning over the HST track is 27 feet from the top of the highest rail to bridge soffit. This vertical clearance is extended for a width of 25 feet from the centerline of track to give the total clearance envelope.

2.4.2 Private Access Roads

In general, minor access roads do not influence the design process and wherever conflicts do occur, it is assumed that these roads will be diverted or terminated. Where the access roads can be maintained or a throughway is desired, proposed vertical and horizontal clearances to allow vehicular access have not been defined but are instead assessed on a case-by-case basis. Where possible, clearances will be confirmed in consultation with the private land owner. In the absence of consultation, relevant Caltrans clearances will be assumed and any necessary protection provided.

2.4.3 Local Authority Roadways

Roadway networks owned and/or operated by local authorities have clearance requirements specific to the relevant authority. Clearance requirements are determined on a case-by-case basis and consultation made with the local authority where possible.

04/02/2014 - RFP No.: HSR 13-57

2.4.4 BNSF/Union Pacific Railroad

Clearances to UPRR and BNSF railroad tracks are stipulated in the Guidelines for Railroad Grade Separation Projects, published by BNSF Railway and Union Pacific Railroad (UPRR). These guidelines specify a permanent horizontal clearance of 25 feet from the centerline of nearest main track to structures. The horizontal clearance limit is less onerous for spur tracks and is stipulated as 15 feet.

For structures carrying the HSR tracks the minimum clearance from the HSR structure column to the centerline of the nearest non-HSR track is specified by TM 2.1.7 as 25 feet. The TM does not distinguish between main and spur tracks. The TM recognizes that this clearance may not always be achievable and allows reductions providing that the column is protected by a crash wall.

The minimum vertical clearance from the top-of-rail to the soffit of overhead structures is 23 feet 4 inches. However concepts have been based on a dimension of 24 feet as the ground survey used for clearance measurements is not sufficiently accurate to show top of rail levels.

In some cases, where no other appropriate design solution is available, it may be necessary to place supports within the BNSF/UPRR clearance envelope. In these cases, the encroaching structures will be protected with crash walls in consultation with the respective BNSF/UPRR agencies.

2.4.5 Expressways/Freeways

Clearances to highways managed by Caltrans are stipulated in the Caltrans Highway Design Manual. Horizontal clearance envelopes are defined by the extents of the roadway, with columns to be situated outside of the roadway shoulders. The minimum vertical clearance from the roadway surface to the bridge soffit is 16 feet 6 inches.

The Caltrans Traffic Manual requires that all columns located within 30 feet of the travelway — also taken as within 20 feet of the paved edge — be fitted with crash protection barriers. This includes columns situated in the median of the roadway. The type of barrier is dependent on the distance of the column from the travelway, and these types are detailed in TM 2.1.7. Column protection barriers are indicated on preliminary design drawings.

2.4.6 Levees

Levees are categorized into three types: federal, county, and private. Federal levees fall under the jurisdiction of the United States Army Corps of Engineers (USACE) and have specific requirements concerning the placement of structures and foundations in the vicinity of the levees.

The USACE requires a minimum horizontal clearance of 15 feet from the toe of the federal levee to any new construction, including foundations. The vertical clearance to federal levees is determined by the requirements of the maintaining agencies' operating procedures, to ensure that maintenance vehicles and equipment can travel on the levee access roads, which are normally situated on top of the levees. For example at Kings River, the Kings River Conservation District requires a vertical clearance of 18 feet from the top of federal levees to any overhead structure. All works within or adjacent to channels that are within the jurisdiction of the USACE require permits to be obtained during design.

Clearances to local and county levees can vary depending on the overseeing authority and so are determined on a case-by-case basis, by coordination with the relevant local agencies where permitted.

04/02/2014 - RFP No.: HSR 13-57

2.5 Third-Party Considerations

The HSR alignment crosses many properties and developments that are the responsibility of third parties. The preliminary design has been developed with consideration for both the current and future needs of the relevant authorities, insofar as it is possible to determine these requirements.

2.5.1 Westside Parkway Project

The Westside Parkway project involves the construction of a new east–west freeway within Bakersfield, including interchanges and tie-ins with adjacent roadways. The project was recently completed and is open to traffic.

Alignments B1, B2, and B3 cross over the Westside Parkway, so provision has been made to span over the new infrastructure. As the project is newly built, new roadway layouts are not reflected in the aerial surveys. The design has therefore been based upon proposed roadway layouts provided by the Westside Parkway design team.

2.5.2 Centennial Corridor Project

The Centennial Corridor project is currently in the preliminary engineering phase and will involve the construction of new roadways and intersections to increase connectivity within Bakersfield and establish a continuous route along State Route (SR) 58 to Interstate 5.

As the conceptual engineering is ongoing, the proposed roadway layout is yet to be determined and several potential options remain under consideration. Of the potential options, Option B has been designated as the preferred option (Thomas Roads Improvement Program 2013).

For the purposes of the HST structures design and arrangement, only Option B has been considered. Where possible, the Project Management Team (PMT) has provided information about this option to inform the HSR design; however, the available information is not complete and some level of interpretation has been necessary.

2.5.3 BNSF Future Provision

Provisions have been made in the arrangement of structures for the future expansion of BNSF railway tracks, within the existing BNSF right-of-way. In the absence of further instruction, the approach to BNSF expansion for 15% design is as follows:

- The BNSF operational right of way is assumed to be 100 feet wide centered on the existing track.
- Structures spanning a single BNSF track should allow for the construction of an additional track, to be placed at a 25-foot offset to the east of the existing track centerline. Both horizontal and vertical clearances to the future track should meet the BNSF minimum requirements.
- Locations where two BNSF tracks are currently provided are assumed not to be further expanded in future though the BNSF could expand to the west side.

2.5.4 State Route 43 Future-Proofing

In the sections between Hanford and Shafter, the HSR alignment skirts SR 43, a highway forming part of the California Freeway and Expressway System and operated by Caltrans. Caltrans has plans to widen the existing highway, so in all relevant instances where the HST intersects with SR 43, consideration has been made for the expansion. SR 43 is predominantly a two-lane highway

04/02/2014 - RFP No.: HSR 13-57

with provision to be made in certain locations for expansion to a four-lane divided highway. See the SR 43 Transportation Concept Report (2006).

In some cases it may be deemed more economical and/or practical to depress the existing SR 43 profile below the HST alignment. The roadway cross section and associated earthworks for the depressed portion of the SR 43 are modeled for a full four-lane divided highway, accounting for future widening even though only the two lanes may be constructed and used initially. The HST mainline structures for these locations are designed for the four-lane configuration.

2.5.5 Shafter City Council

Southeast of Shafter, alignment WS2 intersects with an existing BNSF railroad and a goods loading/unloading facility operated by the city of Shafter. In addition to the future-proofing of the BNSF railroad, allowances have also been made for the expansion of this facility. Where existing tracks are to be extended in this location, the existing track spacing is assumed to be retained. Where there is the potential for new tracks to be installed, the minimum track-center spacing is assumed to be 25 feet, matching the customary standard for BNSF tracks.

2.5.6 Flood Management

Flood control is of particular importance in the Central Valley region, where the consequences of flooding could affect approximately one million inhabitants of the floodplains. As such, the region is subject to a specific flood control plan, which identifies potential floodplains and implements floodplain management programs aimed at reducing flood damage for existing and future developments; see the Floodplain Impact Assessment Report for further details.

In order to reduce the impact of prospective flood events on the operation of the HSR, alignments crossing through areas identified as floodplains will be elevated. Embankments within floodplains are permitted provided it is demonstrated that the effect on the upstream water surface elevation is not greater than 0.1 feet.

In areas designated as floodways, overland water flows must not be impeded by embankments, so elevated structures are required. Adequate clearance between viaduct soffit and the 100-year flood elevation level is provided to account for the flow of potential waterborne debris during a flood event. The requirements of Federal Emergency Management Agency and local designations may not be consistent.

2.6 Seismic Design

The requirements for assessment of the seismic performance of structures are given in the project-specific seismic design criteria, outlined in TM 2.10.4. The seismic design criteria define the two design-level earthquakes as follows:

- Maximum considered earthquake (MCE) – ground motions corresponding to greater of:

1) A probabilistic spectrum based upon a 10% probability of exceedence in 100 years (i.e., a return period of 950 years with 5% damping).

2) A deterministic spectrum based upon the largest median response resulting from the maximum rupture (corresponding to earthquake magnitude M_{max}) of any fault in the vicinity of the structure.

- Operating basis earthquake (OBE) – ground motions corresponding to a probabilistic spectrum based upon an 86% probability of exceedance in 100 years (i.e., a return period of 50 years with 5% damping).

04/02/2014 - RFP No.: HSR 13-57

In terms of acceptability of the design, the requirements relating to seismic performance are the Operability Performance Level under the action of the OBE and No-Collapse Performance Level under the action of the MCE.

These performance levels imply the following:

- Operability Performance Level at OBE
  - Minimal impacts to HST operations.
  - No spalling of concrete.
  - Minimal permanent deformations.
- No-Collapse Performance Level at MCE
  - No collapse.
  - Significant yielding of reinforcing steel.
  - Extensive cracking and spalling of concrete but minimal loss of vertical load carrying capacity in columns.
  - Large permanent deflections.

Response spectra for design of the route from Merced to Bakersfield have been the subject of a separate study. It is expected that new design criteria will be provided to contractors for further design development stages.

2.7 Construction Costs

Construction costs for the 15% design are based upon unit price elements (UPEs) provided by the PMT. The prototypical unit costs provided by the PMT for overcrossings are based on greenfield construction and standard structure spans. A significant number of overcrossings in the 15% design for the FB Section can be considered nonstandard. Therefore, the rates need to be adjusted to reflect the design. It was agreed that the regional consultants would generate revised quantities for the nonstandard structures and use the unit prices provided by the PMT to maintain consistency during development of the 15% cost estimate. These unit prices are reported in FB 15pct Record Set Design Submittal Dec2013 – Basis of Quantities Report, Table 4.0-1 – Detailed Unit Price Elements.

04/02/2014 - RFP No.: HSR 13-57

Section 3.0

High Speed Train Structures

3.0 High-Speed Train Structures

HST structures are required at grade separations over water, steep terrain, congested urban areas, and flood zones, and where the vertical profile is elevated or depressed to provide clearance to existing and proposed infrastructure. The structures shown in the preliminary design drawings have been selected and arranged where possible to provide the most practical, economical, and least impacting design solutions.

3.1 Structure Classification

The design criteria divide structures into a classification hierarchy as follows:

- Primary structures (structures that directly support the HST tracks).
- Secondary structures (all other structures).

Primary structures are subdivided by importance into the following:

- Important structures (structures designated by the Authority to be important).
- Ordinary structures (all other structures).

Primary structures are also classified by technical complexity as follows:

- Complex structures: Structures that have complex response during seismic events through
  - Irregular geometry.
  - Unusual framing.
  - Long spans.
  - Unusual geologic conditions.
  - Close proximity to hazardous faults.
  - Regions of severe ground motion.
- Standard structures: structures that are not complex structures and comply with the CHSTP Design Guidelines for Standard Aerial Structures.
- Nonstandard structures: Structures that do not meet the requirements for either standard or complex structures.

3.2 Structure Types

Various structure types are utilized to carry the HST mainline. In longer elevated sections, the mainline will be carried on an aerial viaduct that is composed of multiple box girder spans. When the standard box girder section is not feasible or is inappropriate, alternative structure types are proposed, each with their own merits. Alternative structure types may also be proposed for discrete single or multispan bridges that do not form part of a viaduct.

3.2.1 Standard Aerial Viaduct

Aerial viaducts utilize a standard structure type and section, the arrangement of which is defined in TM 2.3.3 HST Aerial Structures, prepared by the PMT.

For 15% design, to ensure achievement of horizontal and vertical clearances, the standard section is a prestressed single-cell concrete box girder as shown in Figure 3.2-1. The depth of the standard box section is 12 feet giving a total depth of 14 feet 6 inches from top-of-rail to box soffit. The depth of the girder does not vary within the span. The designed span length for this section type is 120 feet, although the section is also specified for spans ranging between 100 and 120 feet. The overall width of this section from outside of parapets for the purposes of preliminary design is 50 feet.

04/02/2014 - RFP No.: HSR 13-57

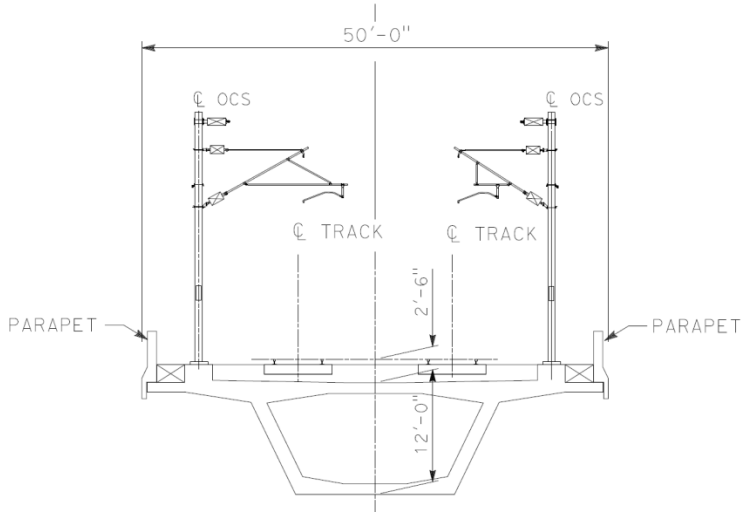

Figure 3.2-1
Typical Section of Standard Aerial Viaduct

The box girder sections are seated upon two bearings at each end of each span (four bearings per span), acting as simple supports. The bearings are articulated to allow fixity at one end of the span and freedom to expand due to thermal effects at the other (see Figure 3.2-2). This bearing articulation is typically alternated at each intermediate support so that the pair of bearings of the preceding span will have opposing fixity to the bearings of the succeeding span, i.e., fixed-free or free-fixed. This ensures that thermal and earthquake forces are uniformly applied to each pier.

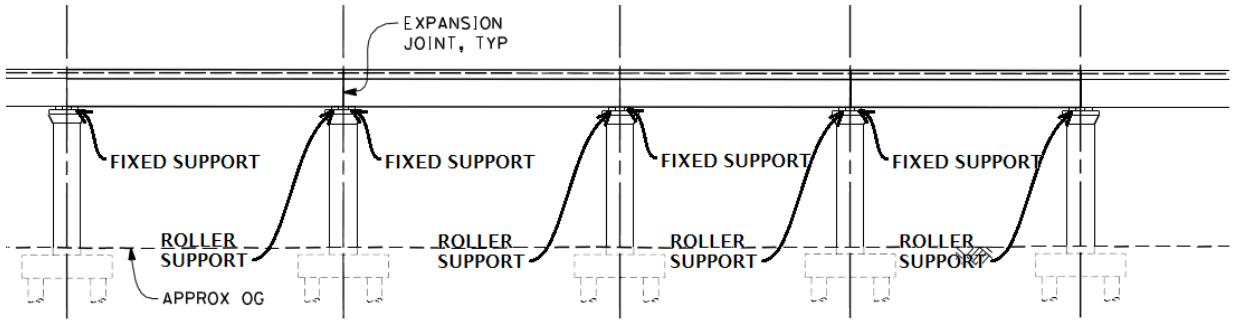

Figure 3.2-2
Typical Elevation of Standard Viaduct Spans

Where there are long lengths of uniform span it is possible that resonant effects may be induced by the passage of trains, which could adversely affect the ride comfort performance. In particularly long viaducts that are made up of many standard spans, the total number of 120-foot spans in series is limited to 20. These long viaduct sections are broken up by placing up to six consecutive 100-foot spans. Where a defined breakup portion is not possible due to the presence of obstacles, effort is made to reduce the number of consecutive 120-foot spans with more frequent sections of 100-foot and 110-foot spans throughout the viaduct.

04/02/2014 - RFP No.: HSR 13-57

3.2.2 Balanced Cantilever

In locations where there are constraints on column positions and spans in excess of 120 feet are required, the preferred structure type is a cast-in-place or precast segmental balanced cantilever. These structures are composed of prestressed single-cell concrete segmental box girders, similar in section to the standard viaduct; however, the depth is varied to more closely match the flexural capacity to the demand. This is seen as deeper sections over the internal integral columns.

The minimum depth of the section remains at 12 feet, matching the standard viaduct section, with the maximum depth in the haunched sections varied depending on the length of the main spans. The maximum depth follows the 1:10 rule. So for a 200-foot span, the maximum depth is 20 feet.

The superstructure box girders are fixed integrally with the internal columns. The main internal spans are therefore fully fixed at each end, with thermal expansion accounted for by the flexibility of the structure and movement at the ends of the outer spans. Outer spans are supported on bearings as per the standard column. The bearings supporting the outer spans of the balanced cantilever will permit movement unless overall requirements demand a fixed connection.

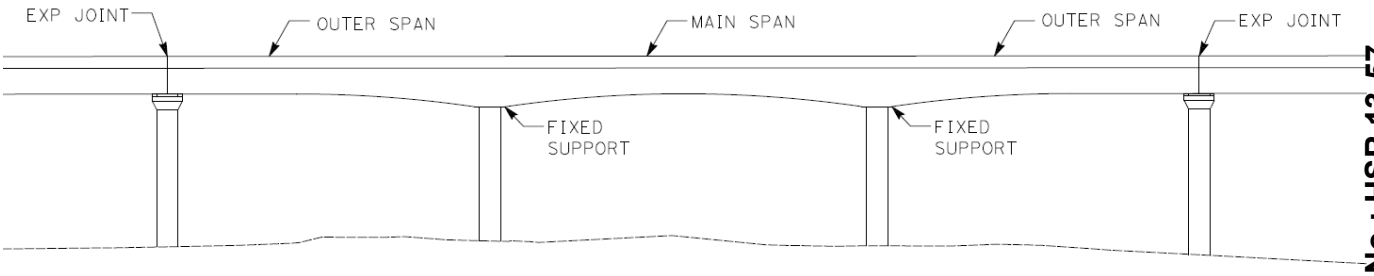

Figure 3.2-3
Typical Elevation of Balanced Cantilever Viaduct Spans

The distance between points of expansion on the structure is limited to prevent excessive axial rail stresses and thus the need for rail expansion joints. In instances where multiple balanced cantilever spans are required in series, it is necessary to provide a break where thermal expansion is allowed to occur. This would be created by specifying two outer spans adjacent to one another and allowing the expansion at the column supporting the ends of both of these spans.

The thermal length rules limit the main span of these structures to 180 feet when adjacent spans are 120 feet. If however, the articulation of the bearings of the preceding and succeeding spans is specified to be fixed at the end of the balanced cantilever section a main span of greater than 180 feet is possible. Specifying the bearing articulation ensures that expansion of the preceding and succeeding spans is not added to the expansion of the balanced cantilever section.

Where a 200-foot span is required, to avoid specifying the articulation of preceding and succeeding spans these spans must be reduced to 100 feet. To prevent uplift of the end of the outer spans, the outer span lengths should typically be greater than 60% of the main span. Where this is not possible, additional weight should be added to the outer span (for example by reducing the void size) to prevent uplift.

3.2.3 Half-Through Girder

These structures are formed by two deep steel I-girders connected at the base of each girder by smaller transverse I-beams to form a U-section. A concrete slab is then cast compositely with the transverse beams to support the HST tracks. This arrangement allows adequate vertical stiffness for deflection control but a relatively small structural depth from the top-of-rail to bridge soffit.

04/02/2014 - RFP No.: HSR 13-57

This configuration is adopted in cases where vertical clearances to roadways and railways are critical and where cost savings may be made by reducing the track elevation. Their suitability is decided on a case-by-case basis. This form of structure is poor at dealing with the dynamic effects of high-skew crossings, and in general these decks will be arranged to have zero skew.

3.2.4 Bathtub Beams

For smaller single-span structures such as roadway underpasses, where the span lengths are less than 100 feet, it is more economical to adopt a "bathtub" beam structure type. The superstructures are formed by precast and prestressed RC bathtub beams with a cast-in-place deck slab.

The bathtub beams are sized in accordance with the Caltrans standard sections, as detailed in Caltrans Bridge Design Aids. The project team has undertaken preliminary calculations to confirm that this configuration and the available beam sizes are suitable for railway loading.

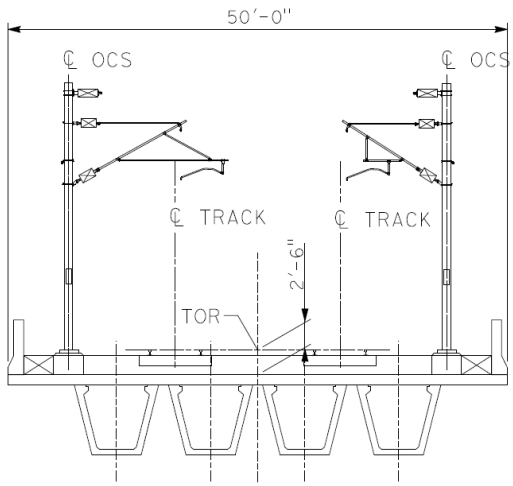

Figure 3.2-4
Typical Section of Bathtub Beam Arrangement

3.2.5 Truss

Truss structures are specified for spans between 210 feet and 350 feet, where a balanced cantilever is deemed no longer suitable. Truss spans have been arranged to follow a 35-foot module to standardize the structure as much as possible. Therefore, span lengths are in 35-foot increments. They offer a much smaller structural depth in terms of the distance between top-of-rail and bridge soffit level and, therefore, may also be desirable in areas where the alignment profile is constrained by vertical clearance over obstacles.

These structures are made up of two steel-trussed girders, connected at the top and bottom chords by transverse steel members. An RC deck, supporting the HST tracks, is cast composite with the lower transverse girders. It is also assumed that the deck slab acts compositely with the bottom chord of the truss so that it shares some of the tension that is carried by the chord.

For longer span truss structures, the top chord is curved to increase the stiffness of the truss section. For shorter spans, the section depth is constant throughout the span (see Figure 3.2-5).

For two-span truss structures, the arrangement may be either two separate trusses or a single truss that is continuous over the intermediate support. The suitability of continuous trusses is decided on a case-by-case basis and is dependent on the required spans and the foundation flexibility.

04/02/2014 - RFP No.: HSR 13-57

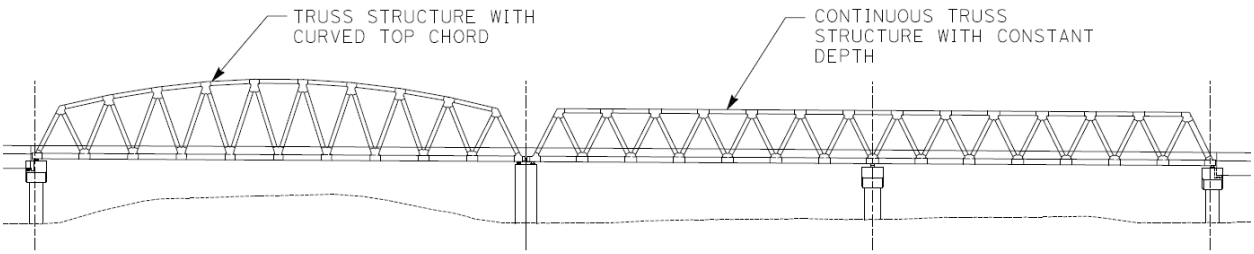

Figure 3.2-5
Typical Elevation of Truss Structures

Accommodation of Systems Facilities within Truss Spans

For truss structures, the normal longitudinal HSR services are accommodated within the volume enclosed by the truss structure. There is provision for a walkway alongside the tracks and adjacent to the inner face of the truss diagonal members. It is possible that standard OCS posts could be used within the truss, since the lowest cross member of the truss structure at 29.5 feet above top of rail is sufficiently high to avoid conflict with the OCS posts. However normal OCS posts would be likely to conflict with walkway requirements. To avoid this conflict it is possible that the OCS posts and brackets may be mounted on brackets attached to the structural truss members. Since the truss widths vary to accommodate differences in horizontal curvature, these brackets need to be specific to the location of the OCS connections.

One further OCS system feature is the special posts used at locations where power is brought into the system from transformer sites. These posts are taller than the standard OCS as the power supply cables span over the HSR to feed both tracks. In the event that a power supply point has to be located at a section where the HSR is on a truss it is possible to add short posts to the tops of the main structural members at the correct locations so that these power cables can be brought across the HSR of fed down to the longitudinal OCS system

Longitudinal services such as signal cables are accommodated in ducts beneath the walkway as for the standard viaduct section.

Fixed equipment is normally a feature of tunnel sections where cabinets are attached to the tunnel walls at intervals. Allowances for these are included within the required envelope for the structure. In the case of trusses however, it may be possible for any necessary trackside equipment to be mounted in the space between the structure diagonal members. In the preliminary design are 3 feet in width and should provide adequate depth for most types of equipment cabinets.

3.2.6 Elevated Slab

In some locations, the HST alignment crosses existing infrastructure at very high skew angle, where conventional bridging structures would require exceptionally large spans that would be impractical. A standard box girder viaduct and straddle bent configuration would have an increased structural depth, which would require increasing the overall viaduct height and length, with increased costs.

In these situations, the tracks are supported by elevated slab structures, conceived as slabs supported on multiple columns to either side of the infrastructure corridor. The slab section is assumed to be constructed by placing precast, post-tensioned beams across the railway, supported on deep, in situ concrete column cap beams are outside the right of way being bridged.

04/02/2014 - RFP No.: HSR 13-57

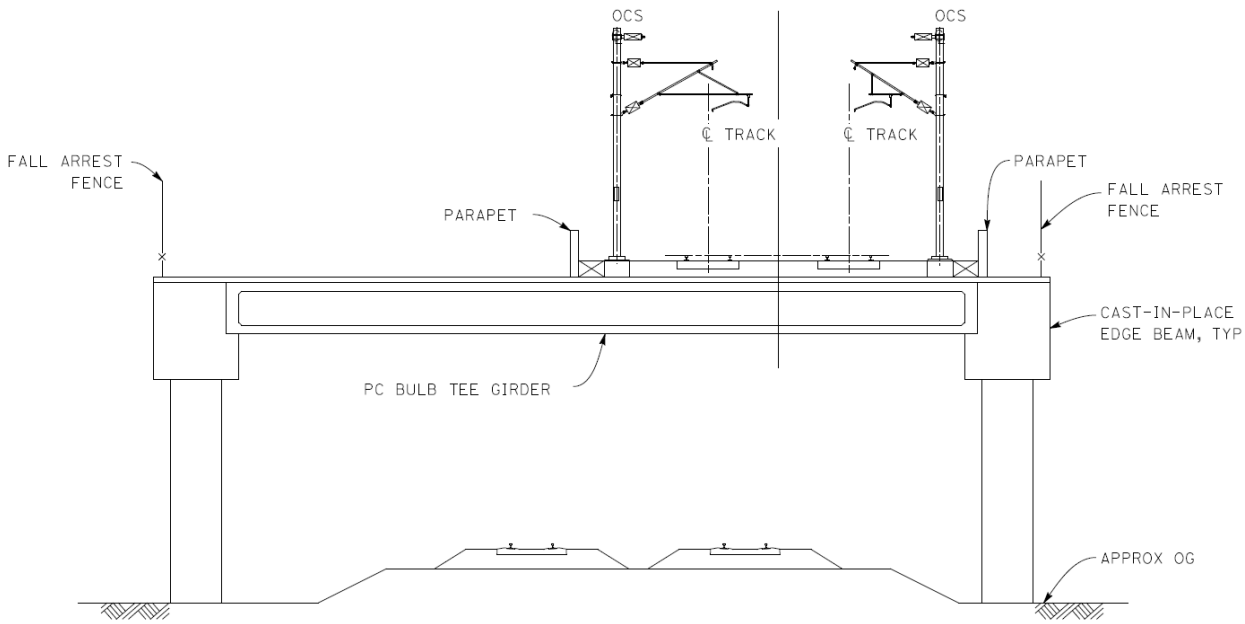

Figure 3.2-6
Typical Section of Elevated Slab

3.2.7 U-Trough (Grade Separation)

In some areas it is preferable to depress the HST alignment below grade, often to avoid conflicts with existing infrastructure. Where cutting slopes are not practical, such as in places where the HST right-of-way width is restricted, a trench structure is proposed. This structure is typically an RC U-trough with a variable depth to match the alignment profile (Figure 3.2-7).

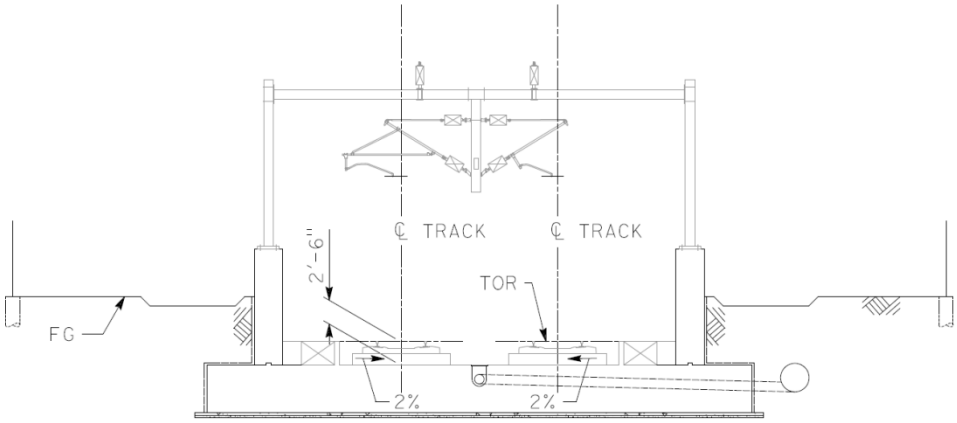

Figure 3.2-7
Typical Section of Unbraced U-Trough

Where the depth of the trench exceeds approximately 30 feet from ground level to the top-of-rail, an unbraced section becomes difficult to achieve without excessively heavy reinforcement. Permanent bracing then becomes a more effective solution. In some locations it may also be necessary to add a roof slab to carry overpassing roadway and railway infrastructure. In areas of high groundwater or flood plains, a U-trough may be used to exclude groundwater or floodwater. In such areas it may be necessary

04/02/2014 - RFP No.: HSR 13-57

to increase the thickness of the base slab and maximize the "heels" to avoid flotation. In extreme cases, it may be necessary use tension piles to hold the structure down.

3.2.8 Box Culverts

Culverts are specified in a variety of locations along the HST alignment, principally at canal and ditch crossings when the alignment is at-grade or on shallow embankment. Typically, the smaller culverts will be proprietary precast RC boxes that will be sourced from a precast supplier by the design-build contractor. Larger structures are likely to be constructed in situ.

RC boxes may also be utilized for vehicular access through retained embankment supporting the HST mainline. These structures will be cast in situ and subject to a specific structural design.

3.2.9 Station Structures

Elevated station structures are always required to support several tracks, including the station tracks, mainline tracks, and storage tracks. Structure joints are not desirable where tracks may cross over the joints, due to the potential for differential displacements between the separate structures. Structure joints within the zone where there are moveable rails for switches are also not permitted. The proposed structure type for sections of the station with track crossovers is a single post-tensioned RC box girder, the width of which encompasses all station/storage/mainline tracks (see Figure 3.2-8).

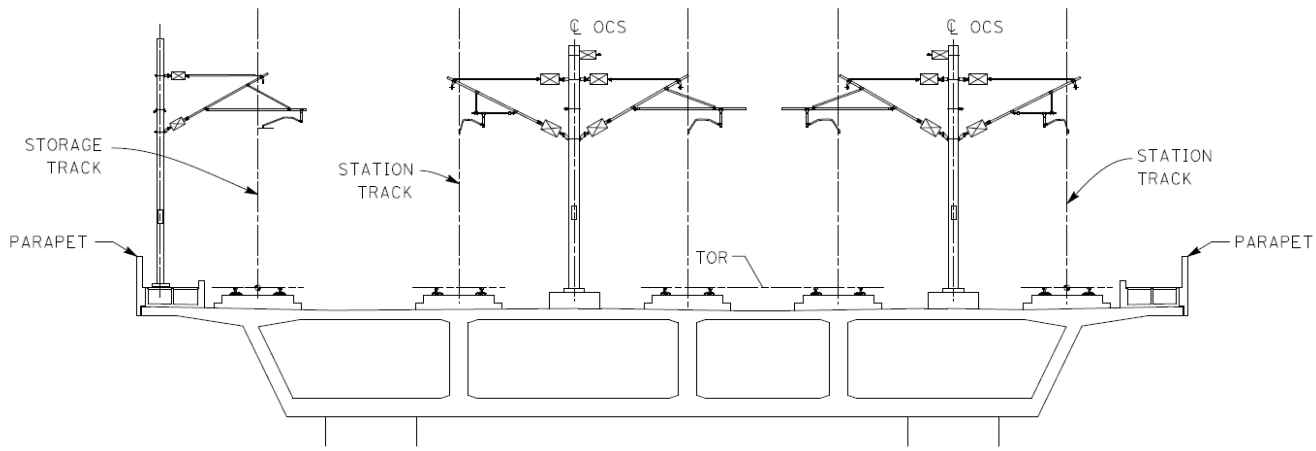

Figure 3.2-8
Typical Section at Station with Track Crossovers

In sections of the station where track crossovers are not required, it is proposed that the tracks will continue to be supported on a single post-tensioned RC box girder. This includes portions of the HST structure that are adjacent to the station platforms (see Figure 3.2-9). The platforms will be designed by others and may be constructed after the construction of the track structure. Above ground level, the station and the track structures will act independently; however, they may share the same foundations.

04/02/2014 - RFP No.: HSR 13-57

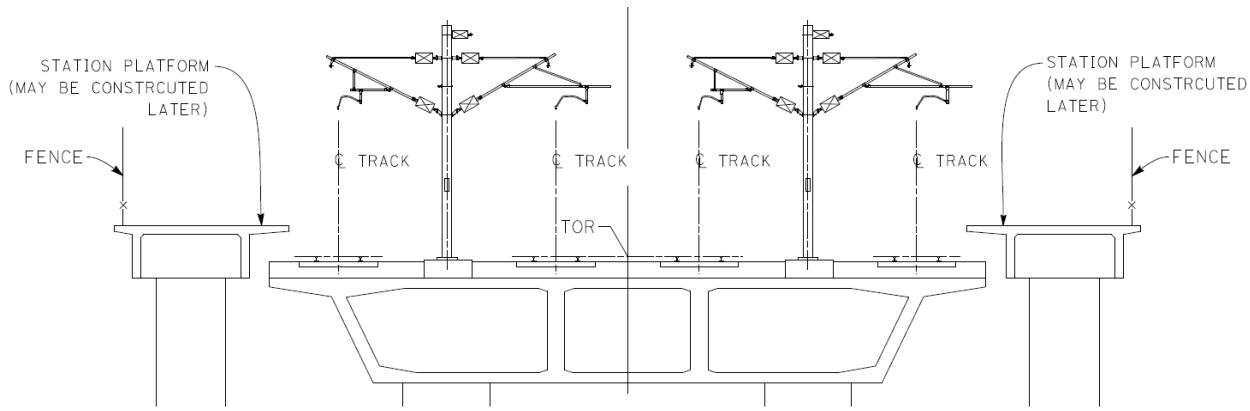

Figure 3.2-9
Typical Section at Station

3.3 Substructure/Foundation Types

3.3.1 Retaining Walls

In order to minimize HST right-of-way width and thus environmental impacts, the maximum embankment height is limited to approximately 12 to 15 feet, taken from the top-of-rail to the existing ground level. At alignment elevations greater than 12 to 15 feet, a retaining wall is specified. These walls are spaced to give a 60-foot width of retained embankment.

The retaining wall type proposed is an MSE system, which uses straps placed between layers of fill to anchor the outer retaining panels.

The recommended maximum height of retaining walls is 30 to 35 feet, measured from the top-of-rail to ground level. Above this height, the HST mainline will be supported on an elevated structure. A height of 30 to 35 feet corresponds to the height at which a roadway vertical clearance can be achieved below the viaduct, as illustrated in Figure 3.3-1. This maximizes accessibility through the structure. The 30- to 35-foot limit is not fixed and may be reviewed should other factors influence the design.

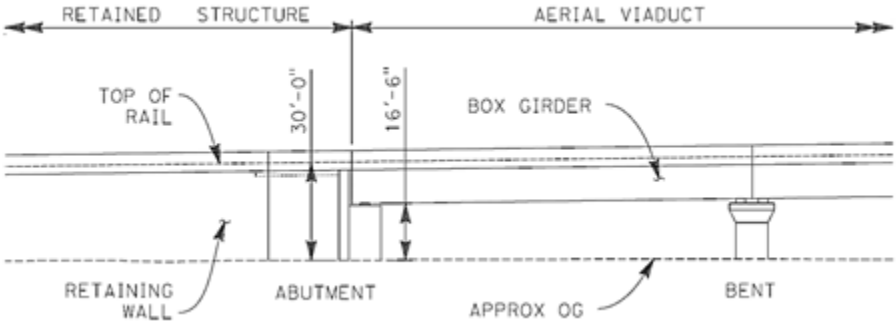

Figure 3.3-1
Typical Section at Station with Platforms

3.3.2 Abutments

Bridge abutments will be formed with reinforced concrete. Viaduct abutments will be aligned normal to the HST alignment. For other structures such as single- or two-span bridges, the abutments may be skewed to match the obstacle that is crossed. Where the required skew would exceed 30 degrees, the

04/02/2014 - RFP No.: HSR 13-57

structure configuration will be limited to 30 degrees and additional span will be used to accommodate the obstacle. This limitation is required to comply with the requirements of TM2.10.10, which requires skews to be limited to comply with dynamic performance requirements. Behind each abutment, a transition slab is provided. These are typically 30 feet in length and are terminated square to the track alignment regardless of the skew of the abutment.

3.3.3 Aerial Viaduct Columns

Standard viaduct spans are supported by circular RC columns of a range of diameters. Design undertaken by the PMT advises that for column heights up to 26 feet — measured from the top-of-pile cap to top-of-column cap — 8-foot column diameters are suitable. For column heights greater than 26 feet and up to 38 feet, 10-foot column diameters are suitable. Column heights greater than 38 feet may require diameters larger than 10 feet. For the 15% design, Table 3.3-1 has been added to the drawing sheets to indicate the column size in relation to height above grade. To simplify the details the transition heights have been rounded to whole 10-foot bands. The higher column heights and diameters have been checked for specific locations, as columns higher than 50 feet typically occur only in Shafter and Bakersfield. Additionally, the drawings will have an additional not to say that the minimum column height of 16 feet is required from top of foundation to soffit. This is to avoid the risk of deep beam behavior for small grade to soffit heights.

Table 3.3-1
Column Diameters

Column height	Column diameter
0–20 feet	8 feet
20–40 feet	10 feet
40–50 feet	12 feet
50–60 feet	15 feet
60–80 feet	20 feet
80–100 feet	25 feet

3.3.4 Hammerhead Piers, Portals, and Pier Walls

Structures such as trussed or half-through girder bridges require bearings at the edges of the structure to support the main load carrying elements. In addition, certain structure types, e.g., the bathtub beam configuration, are composed of multiple beams that require a support for the full width of the structure. In these cases, hammerhead piers, portals, or pier walls are proposed.

Where column placements are constrained, a single-column hammerhead pier may be proposed, which is composed of a wide column cap on top of an RC column. Columns for hammerhead piers are typically larger than those used for the standard viaduct (see Figure 3.3-2).

04/02/2014 - RFP No.: HSR 13-57

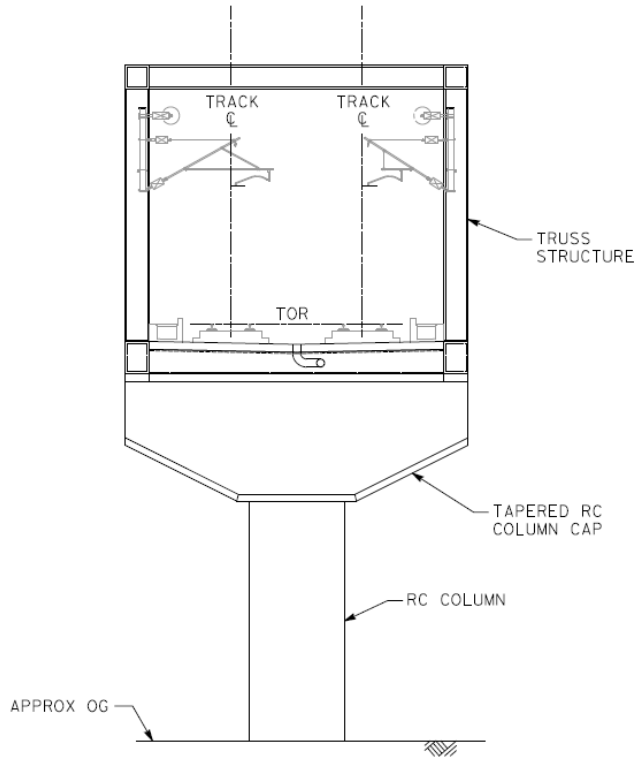

Figure 3.3-2
Typical Section of Hammerhead Pier

As the column cap extends for the full width of the structure, situations where the pier is near or skewed to a roadway may result in the cap extending over the roadway. The column height may need to be increased to ensure that the underside of the cap does not foul the clearance envelope. In these cases, the hammerhead caps can be tapered, giving a reduced depth nearer the ends and enabling a reduced pier height.

Where column locations are less constrained, a two-column portal frame may be preferable to a single-column hammerhead. Portals are typically in the form of a two-column bent, with two RC columns cast monolithically with an RC bent cap.

Alternatively it may be more desirable to specify a full-width RC wall. Walls are typically proposed in hydraulically sensitive locations, such as when supports are situated in waterways. Pier walls present much better hydraulic behavior in comparison with multicolumn bents, particularly with regard to scour mitigation. The thicknesses of the walls can vary and the upstream/downstream sides may be shaped to encourage more efficient water flow (see Figure 3.3-3).

04/02/2014 - RFP No.: HSR 13-57

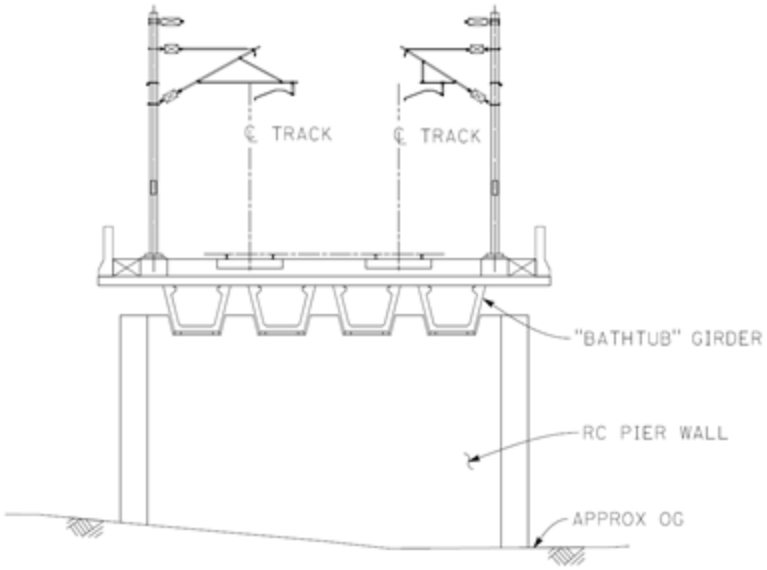

Figure 3.3-3
Typical Section of Pier Wall

3.3.5 Straddle Bents

Where the viaduct crosses over a roadway or railway at high skew, straddle bents may be adopted to support the viaduct sections to ensure that the supporting foundations lay outside of the given horizontal clearance envelopes. These are specified as concrete bent caps spanning over the roadway/railway corridor normal to the alignment of the HST.

Straddle bent configurations may be traditionally used — the standard viaduct box section is seated upon the concrete bent using bearings. Alternatively, in situations where vertical clearances to the infrastructure below have significant impact, integral straddles may be used. In these cases, the viaduct box sections are cast integrally into the bent, forming a monolithic connection (see Figure 3.3-4).

The connection between the straddle bean and the columns may be monolithic or pinned. A pinned connection simplifies the detailing of the column for seismic effects, particularly torsion, but at the cost of losing the positive benefits of continuity between beam and column. The decision regarding which solution is the better option is beyond the scope of 15% design and should be carefully considered in the subsequent design stages.

04/02/2014 - RFP No.: HSR 13-57

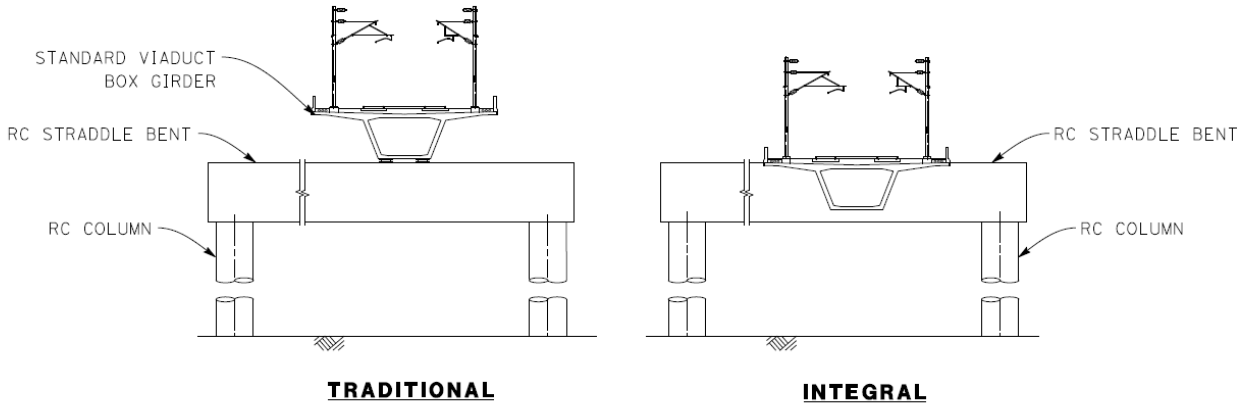

Figure 3.3-4
Typical Straddle Bent Sections

Where a series of integral straddle bents are required, it may not be possible to satisfy the thermal length requirements of TM 2.10.10. In such cases it may be necessary to introduce half-joints into the deck section at intervals to suit the thermal length rules.

At the BNSF crossings north of Cross Creek the BNSF property boundary is over 300 feet wide and the operational right of way is assumed to occupy a 100 foot strip within this centered on the main line track. At this location the required track geometry of the HSR alignment is so constrained that the use of straddle bents that fully span the BNSF operational right of way were to be used it would be necessary to vertically and horizontally realign the HSR. It has been agreed with the PMT that the columns and foundations in this area will be permitted to fall within the operational ROW boundary to avoid the need for realignment.

3.3.6 Piled Foundations

The typical detail for standard viaduct foundations is a group of piles and pile cap. In situations where the viaduct foundations conflict with other infrastructure or properties, a mono-piled foundation may be specified; however, the adequacy of mono-piles is assessed on a case-by-case basis. With the possible exception of very short or small diameter columns, mono-piles are typically not able to provide the necessary stiffness.

For the purposes of developing the scheme footprint, the size of pile caps adopted for typical viaduct structures has been based upon a 4No. pile group of 6-foot-6-inch-diameter cast-in-drilled-hole piles. The center-to-center spacing of the piles is assumed to be four times the diameter. This requires a 39-by-39-foot base. This configuration was developed by the PMT in studying the preliminary design of the standard viaduct. The column heights for this foundation arrangement were limited to 40 feet. For non-standard structures the base sizes are assessed on a case-by-case basis and modified accordingly. For example, for the very tallest straddle bents, a 3-by-3-pile base of 68-by-68-foot dimension is likely to be required based on conservative assumptions regarding ground conditions.

Footings may be skewed to align with linear obstacles such as roads, railways, and canals in order to minimize the construction impact or to limit spans.

04/02/2014 - RFP No.: HSR 13-57

3.4 Constraints

3.4.1 Hydrology

Small Creeks, Poso Creek, Tule River, Deer Creek

Hydraulic capacity is based on the water level at the top of the banks. Bridge spans are arranged to place a column in the middle of the channel, with abutments close to the banks. Placing a column and foundation in the river channel ensures that a full range of construction permits are obtained and that in subsequent design stages the designer is not constrained on the types of environmental mitigation works that can be developed. For example it is assumed that scour around the column could be reduced by placing riprap in the channel, subject to having appropriate permits.

Kern River

The Kern River channel is considered too large for riprap to be used as scour protection for columns in the river. Scour depth has been calculated to be approximately 30 feet. It is assumed that the foundation piles will be designed to accommodate this length of exposure. This allows the pile caps to be constructed at normal depths below river bed level. Alternatively, the designer may choose to set the founding level below scour depth and increase columns heights.

Cross Creek

The channel of Cross Creek is controlled by levees. To date, the PMT has not been able to arrange a meeting with the maintainers of these levees so that clearance requirements can be discussed and agreed. To enable design to progress, it has been assumed that the maintainers will require a vertical clearance of 16 feet (which is suitable for the majority of road vehicles). It is also assumed that there will not be a requirement for foundations to be more than 15 feet from the toe of the levee, as this would force a two-span structure to be provided.

Initially it was assumed that a multispan crossing would be possible and that columns would be placed in the channel. This would ensure that all necessary permits would be obtained for any kind of construction solution in later design stages. To confirm feasibility of this proposal a hydraulic study was undertaken to calculate the effects on water surface elevation and scour resulting from columns placed in the channel.

The results of this analysis clearly demonstrated that the water surface elevation in the confined channel was sensitive to the placing of columns between the levees. Also, in flood conditions, the scour effects from these columns resulted in the channel bed being excavated to a depth that would undermine the adjacent levees and cause their failure. As a consequence, placing columns in the channel is not considered a practical method of limiting the spans of the structure as the scour hole that would open in flood conditions would undermine and destabilize the levees. The only practical solution for crossing the creek is therefore a single-span truss structure.

At Cross Creek, outside the channel of Cross Creek itself, a section of the floodplain is a Federal Emergency Management Agency–designated floodway. As the floodway is of relatively shallow depth, the viaduct has been set low so as to just clear the 100-year flood level. This is an exception to the guideline that embankments transition to structures at a height of 30 to 35 feet. A minimum vertical clearance of approximately 4 feet between the viaduct soffit and ground level has been provided, which will allow inspection and maintenance access to the soffit of the structure.

Kings River

To the east of Hanford, the Kings River channel is divided into three channels at Cole Slough, Dutch John Cut, and Kings River itself. The Cole Slough and Dutch John Cut are confined by levees that are the responsibility of the USACE and are therefore subject to federal constraints. Other levees have been constructed in the area and in particular at Kings River Old Channel that are not subject to USACE control. The Kings River Conservation District (KRCD) maintains the federal levees on behalf of the

04/02/2014 - RFP No.: HSR 13-57

USACE and also other levees in the area. The KRCD has clearance requirements in addition to those of the USACE that the design must accommodate.

Discussions with the KRCD have resulted in an agreement to provide a minimum vertical clearance of 18 feet from the top of a levee to allow access for their maintenance plant. Horizontally, the structure foundations will not be permitted within 15 feet of the levee toes. In addition to this it is considered prudent to allow additional construction clearance to the foundations since the founding level is typically 10 to 15 feet below grade, which if located at 15 feet from the levee toe could potentially cause stability problems for the levee. The location of the abutment foundations allows for some construction working space so that the contractor is able to slope the excavation sides or install shoring walls to retain the ground and the levee.

As the levees do not follow the line of the channels uniformly, the viaduct requires four separate trussed sections to ensure adequate clearances to all of the levees and to minimize hydraulic impacts. At Cole Slough the location of the levees in relation to the alignment requires a minimum span of 335 feet, but to allow for some construction clearance, a 350-foot span is considered appropriate. For spans in excess of 330 feet a design variance will be required.

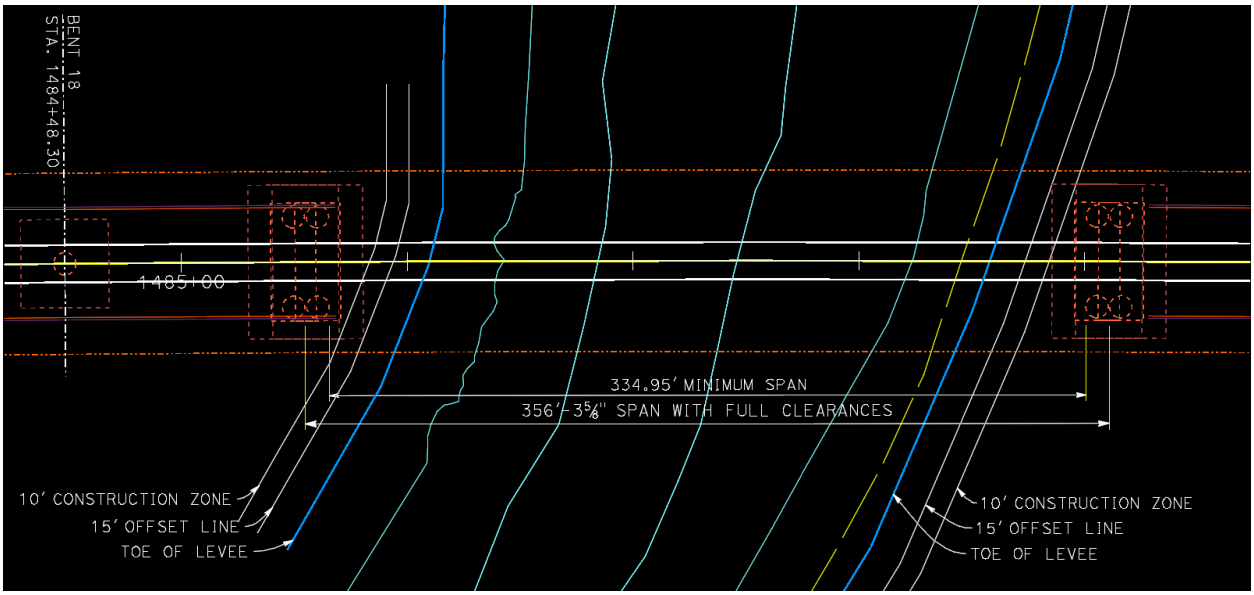

Figure 3.4-1
Cole Slough – Levee Clearance Constraints

At Dutch John Cut the distance between levees is much greater and a two-span structure is required. To satisfy the minimum clearance, two spans of 330.5 feet are required; however, as above, if reasonable allowance is made for construction space, two 350-foot spans would be a more appropriate solution.

04/02/2014 - RFP No.: HSR 13-57

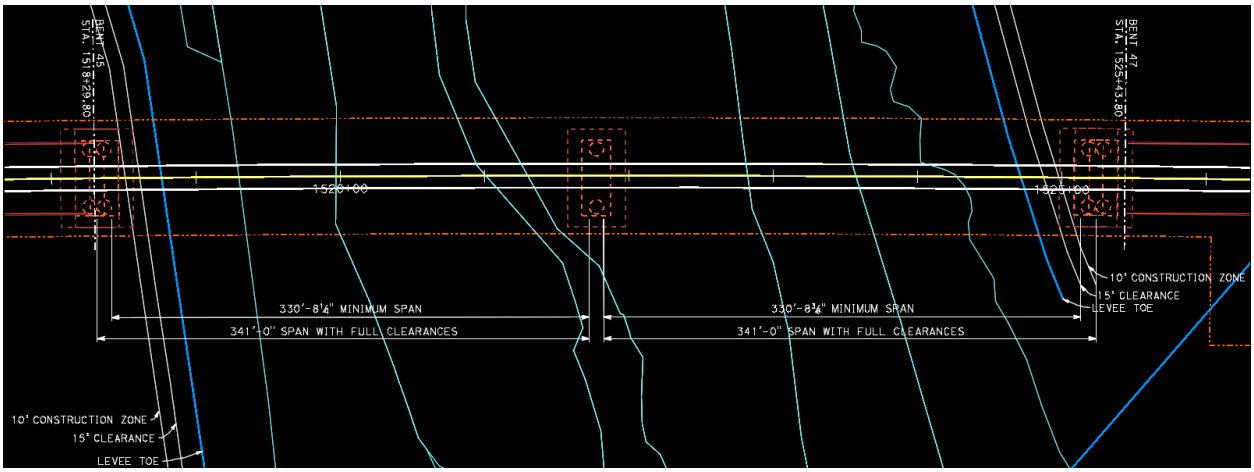

Figure 3.4-2
Dutch John Cut – Levee Clearance Constraints

At the other two trussed sections of the viaduct, Kings River (Old Channel) and at Levee Road, clearance to levees is of less concern. At Kings River (Old Channel) the levees are not federally mandated and the channel can be crossed with two spans of 315 feet. At Levee Road a truss of 280-foot span has been used to satisfy vertical clearance constraints, avoiding lengthening the viaduct by several spans.

In considering the above cases, the PMT permitting team should consider that demonstrating that the structure proposals comfortably satisfy the USACE requirements will make it more likely that the USACE will be less concerned about the potential for impact on their levees and will view the permitting process to be within the scope of a "408 minor" permit than a "408 major." Regarding overall project program consequences, a "408 minor" permit would be significantly quicker to obtain than a "408 major."

To the west of Hanford, alignment options HW and HW2 cross the Kings River at a point where the river channel is more constrained. In these locations it has been possible to cross the river and levees using balanced cantilever spans.

3.4.2 West Side Parkway/Centennial Corridor

In Bakersfield there are three route options: B1, B2, and B3. B3 is a hybrid route composed of parts from B1 and B2 so that in the initial section, B2 and B3 are identical. In the later sections B1 and B3 are almost identical. Each alignment has to negotiate the pattern of roadways of an urban center, so compromises may have to be made in deciding the optimal span arrangement at each conflict point. The result may appear to be a random mix of structure types.

In one area in particular the choice of structure is determined by the need to have the maximum span possible. This location is the point where the B1 alignment crosses the Westside Parkway and the proposed Centennial Corridor. The Westside Parkway (WSP) was completed in 2013 and is now open to traffic. It is therefore now an existing roadway instead of a proposal. The alignment of the HSR touches the WSP in a number of places on the three alignments. In each case the preferred solution is to install straddle bents to support standard spans of the HSR girder.

At Truxtun Avenue on Alignment B1 the solution chosen is to use a two-span truss. At the point where the HSR crosses the WSP, the Centennial corridor (a proposed extension to the WSP currently in final design) will extend the roadway past the connection to Truxtun Avenue where the WSP currently terminates. This extension happens at the end of a bridge on which the WSP crosses the Kern River. At this location, the combination of roadway lanes, on- and off-ramps, and the structure approach

04/02/2014 - RFP No.: HSR 13-57

embankments means that the minimum clear span required for the HSR to cross the obstacle is 338 feet, assuming that foundations could be placed at the edge of the traveled way on each side of the WSP/Centennial Corridor. A similar constraint applies to the crossing of Truxtun Avenue nearby, where the crossing must span Truxtun Avenue, the new on-ramp of the WSP, and the local drainage associated with the roadway. Here the minimum span would be 334 feet. These structures would be so close together that a link span of 22 feet would be required to connect them.

The preferred option was to use two 350-foot span trusses with a common middle support. This is shown in the Figure 3.4-3. A design variance will be required for these spans in subsequent design stages.

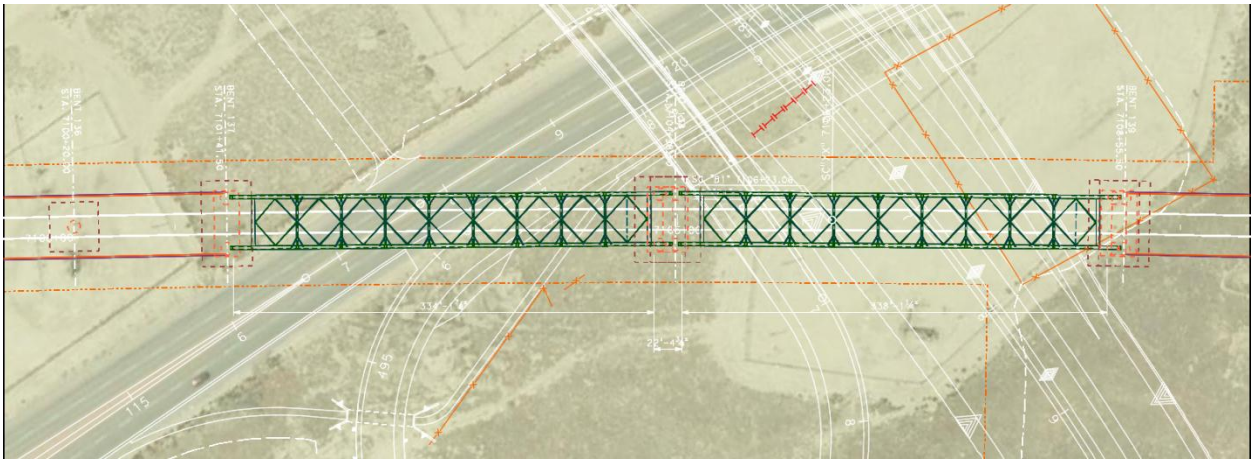

Figure 3.4-3
Truxtun Avenue – Span Arrangement

3.4.3 Railroad Requirements

Collision/Intrusion Barriers

Where the HSR tracks share corridors with conventional train tracks, the HSR requires protection from the intrusion of derailed freight trains, as outlined in TM 2.1.7 (see Figure 3.4-4). Typically the collision/intrusion protection can be provided by a combination of level differences and barriers. However, where space is constrained, a barrier is the only solution.

04/02/2014 - RFP No.: HSR 13-57

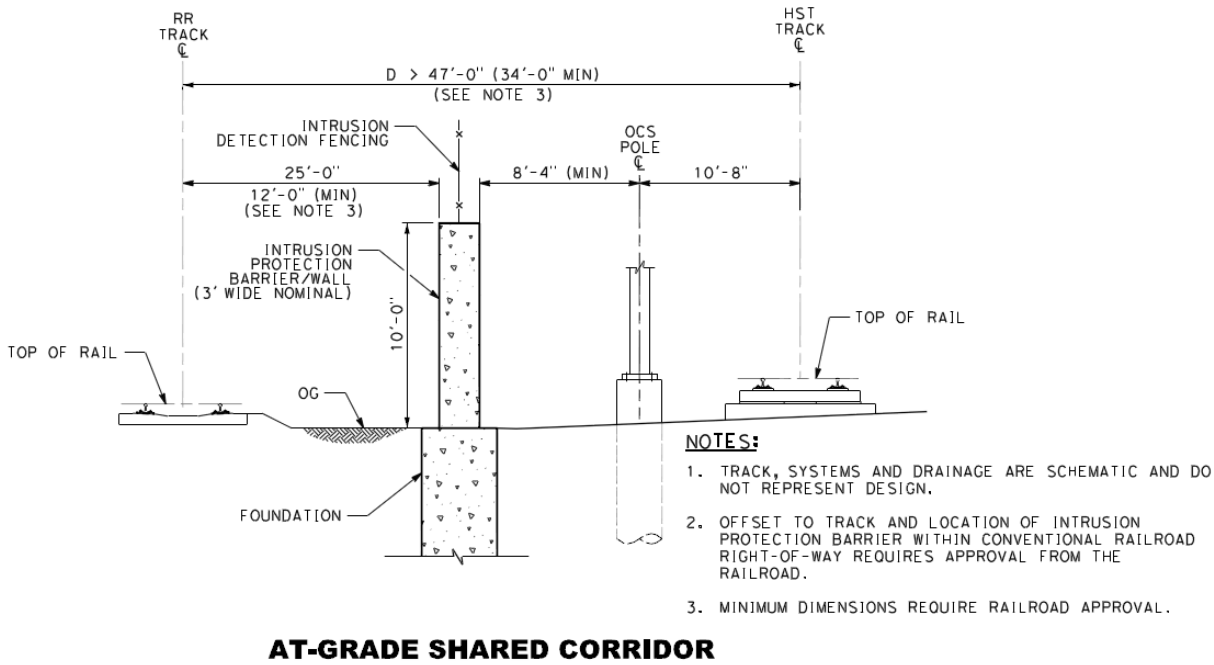

Figure 3.4-4
Intrusion Protection Barriers in Shared Corridor (TM 2.1.7)

Where possible this wall can be attached to another structure such as a U-trough, provided that the permanent structure is protected from overloading due to collision forces.

Column Protection

The UPRR and the BNSF railroad have a common design guide for grade separation projects. The guide identifies their requirements for column protection in low clearance situations. Where the HSR and adjacent railways are not at grade, the HSR is most likely to be elevated on a viaduct, so the HSR columns require protection from the UPRR and BNSF rolling stock.

The HSR clearance requirements are set out in TM 2.1.7 Clause 6.1.5, which states that for column protection, a crash wall is required in all cases where the clearance is less than 25 feet from face of column to centerline of BNSF/UPRR track. The TM provides details of the protection wall required, which is a 3-foot-thick concrete wall with 1-foot clearance to the column. As the clearance to the track reduces, the required height of the protection wall increases to a maximum of 12 feet height above adjacent track at a 12-foot offset to the column. No minimum clearance to the track centerline is specified.

Railway Facilities

In some locations, particularly the BNSF yards in Bakersfield, the construction of the various route options requires extensive disturbance of the current railway facilities. In these cases it has been assumed that it will be possible to rearrange the facility after construction to maintain its current use and capacity.

04/02/2014 - RFP No.: HSR 13-57

3.5 Route Description

3.5.1 Fresno

The scope of this planning study is the Fresno to Bakersfield section only, and so alignment sections north of Stanislaus Street have not been considered.

From the OK Produce facility near Stanislaus Street, the alignment runs south-west and at-grade through predominantly industrial, suburban residential and commercial land uses. At E Florence Avenue the alignment is depressed below grade and enters a retained trench or U-trough section. The trench terminates at S Orange Avenue and the profile continues to elevate first on embankment, then retained embankment and finally aerial viaduct at Golden State Boulevard.

The first span of the aerial viaduct is a truss structure due to the span required to cross Golden State Blvd, made greater due to the high skew of the roadway relative to the HST alignment. Further truss structures are required at the crossings of S Cedar Avenue and State Route 99 for the same reasons. The remainder of the viaduct uses standard concrete girders of 100- to 120-foot span. The viaduct terminates south of E Muscat Avenue.

3.5.2 Hanford/Kaweah

The route of the CHSTP leaves the southern limit of the City of Fresno and continues south toward Hanford and Corcoran. This area is largely agricultural, so aerial structures are required only where there is a major obstacle to be crossed. The local road network crosses at regular intervals and the majority of these crossings will be maintained by the construction of roadway bridges that pass over the HST.

Because of the agricultural nature of the region, there are numerous small canals cross the HST mainline. These canals will be carried under the HST tracks in box culvert structures. The vertical alignment of the HST adopts a minimum height above grade of 12 feet, which includes an allowance for culvert crossings.

Three alignment options are proposed to pass by Hanford. These have been designated Hanford, Hanford West, and Hanford West2. See Table 1.2-1.

The Hanford option swings east at Conejo and crosses the BNSF tracks on viaduct and the SR 43 on a high skew through girder structure before turning south again to pass between Hanford and Visalia. At Kings River, the route crosses the three main channels of the river at Cole Slough, Dutch John Cut, and Kings River itself. At each of these locations the standard viaduct span is not sufficient to clear the obstacle, so single- or two-span steel trusses have been proposed. The environmental report identifies this area as a location where wildlife is likely to cross the route, so provision has been made in the alignment for wildlife crossing structures. The precise location of these structures will be determined by the relevant experts. In the Kings River floodplain a number of these structures will also serve as flood relief and floodwater equalization structures. Refer to Hydraulics, Hydrology, and Drainage Report for details of possible locations.

After crossing Kings River, the route of the HST turns south again, rising onto viaduct to cross the SR 198 and Cross Valley Rail Road. To the north of SR 198, the HST is widened to four tracks on viaduct to provide for the future construction of the Kings-Tulare Regional Station as traffic demand requires. The station section will also provide storage tracks to aid train operations.

Alignment options K3 and K4 cross SR 43 at a high skew prior to Lansing Avenue and require either a steel truss girder or elevated slab structure to make the crossing.

04/02/2014 - RFP No.: HSR 13-57

Both Hanford West options continue south after Conejo to pass between Hanford and Armona. The alignment is carried on aerial viaduct over Murphy Sough and Kings River. As the alignments approach the western boundary of Hanford, near Grangeville Boulevard, they depress to grade level where the at-grade option remains. The below-grade option continues to depress into cutting, rising back up to grade at Houston Avenue. The Hanford West at-grade and below-grade options both include provision for station facilities north of the SR 198.

Both the Hanford West at-grade and below-grade options cross under the existing SJVR. In both cases the SJVR is accommodated by the construction of a new structure.

3.5.3 Corcoran/Allensworth

South of Lansing Avenue the HST route continues toward Corcoran and diverges to three possible alignment alternatives. The two western alternatives run through the Corcoran city area and both include a section of elevated viaduct, as the alignment rises to clear the J G Boswell facility and/or the BNSF tracks.

The eastern alternative bypasses Corcoran and runs predominantly on variable height embankments, with some short sections of elevated viaduct. All three alignments pass through agricultural land, crossing several fluvial channels in addition to two small reservoirs north of Corcoran and Tule River south of Corcoran.

As the Corcoran Subsection alternatives converge, the alignment runs south toward Allensworth on variable height embankments. At Allensworth, two alternatives are proposed, to either run through the central Allensworth area or bypass it on the western side. Both alignments run on elevated viaduct in the vicinity of Deer Creek and Pixley National Wildlife Refuge, and then on variable height embankments until they converge at Poso Creek.

3.5.4 Wasco/Shafter

At Poso Creek, the alignment enters the Wasco-Shafter subsection with options to either travel through the urban areas of Wasco and Shafter or follow a bypass route to the east. Depending on the selected route, the alignment will either be elevated and cross Poso Creek on viaduct or be carried on variable height embankments and span the creek with a discrete bridge structure.

The through Wasco-Shafter alternative follows SR 43 on elevated embankments, transitioning into viaduct near Wasco to cross over to the west side of the BNSF. It then loosely follows the BNSF line until Shafter where it again elevates to cross over and return to the east side of the BNSF.

The Wasco-Shafter bypass option diverts east, elevating to viaduct to cross the BNSF railroad and then is carried south on variable height embankment. The alignment then bends further east near Wasco and is once again elevated to structure so as to cross over the BNSF railroad and Shafter City storage facility south of Shafter. Both of the BNSF crossings are made at high skew, so the mainline is proposed to run on sections of elevated slab to make the crossings. The alignment is then carried on variable height embankments until it rejoins the through Wasco option, between Shafter and Hageman Road.

3.5.5 Bakersfield

South of Hageman Road the alignment turns east and approaches Bakersfield. There are currently three alignment options proposed through Bakersfield, all of which are on elevated structure and provide for a station downtown in the immediate vicinity of the existing Amtrak station.

All three alternatives include crossings of the Kern River, the Central Valley and Friant-Kern Canals, and the Westside Parkway. In one of the alternatives, the alignment is directed through the existing BNSF storage yard.

04/02/2014 - RFP No.: HSR 13-57

Passing through the station the alignment continues east until the Fresno-Bakersfield section terminates at Oswell Street.

Owing to the number of constraints and the urban nature of the land use, column locations are very restricted in some areas. Viaducts in all alternatives are therefore to consist of numerous longer span structures such as trusses and balanced cantilevers, in addition to straddle bent supports.

3.6 Structure Classifications and Constraints

A full list of the mainline structures and their respective classifications are listed in Table 3.6-1. Ancillary structures are listed in Table 3.6-2. For definitions of each classification refer to section 3.1.

The key constraints which are deemed to govern the structural arrangement and type selection are given Table 3.6-3 and Table 3.6-4 for mainline and ancillary structures respectively. Note that not all constraints are listed and reference should be made to the 15% drawing set to identify all constraints.

04/02/2014 - RFP No.: HSR 13-57

Table 3.6-1
Mainline Structure Key Data and Classification

No.	Alignment	Name of Structure	General Classification	Technical Classification	
				Structure Types Specified	Classification
1	F1	Fresno Street Underpass	Primary	Bathtub girder	Non-Standard
2	F1	Tulare Street Underpass	Primary	Bathtub girder	Non-Standard
3	F1	Ventura Street Underpass	Primary	Bathtub girder	Non-Standard
6	F1	Jensen Trench	Primary	Concrete U-trough structure	Complex
7	F1	Fresno Viaduct	Primary	Standard viaduct	Standard
				Steel truss structure	Complex
8	H	Conejo Viaduct	Primary	Standard viaduct	Standard
				Elevated slab structure	Complex
9/ 10	H	Kings River Viaduct	Primary	Steel truss structure	Complex
				Standard viaduct	Standard
				Steel truss structure	Complex
11	H	Hanford Viaduct	Primary	Standard viaduct	Standard
				Elevated station structure	Complex
12	HW	E Conejo Ave HST Underpass	Primary	Bathtub girder	Non-Standard
13	HW	Kings River Viaduct (At-Grade)	Primary	Standard viaduct	Standard
				Balanced cantilever	Non-Standard
14	HW	Grangeville Blvd Underpass (At-Grade)	Primary	Bathtub girder	Non-Standard
15	HW	W Lacey Blvd Underpass (At-Grade)	Primary	Concrete box structure	Non-Standard
16	HW	13th Ave Underpass (At-Grade)	Primary	Concrete box structure	Non-Standard
19	HW2	E Conejo Ave HST Underpass	Primary	Bathtub girder	Non-Standard

04/02/2014 - RFP No.: HSR 13-57

No.	Alignment	Name of Structure	General Classification	Technical Classification	
				Structure Types Specified	Classification
20	HW2	Kings River Viaduct (Below-Grade)	Primary	Standard viaduct	Standard
				Balanced cantilever	Non-Standard
21	HW2	Grangeville Blvd Underpass (Below-Grade)	Primary	Bathtub girder	Non-Standard
24	K1	Idaho Ave Underpass	Primary	Bathtub girder	Non-Standard
25	K1	12th Ave Underpass	Primary	Bathtub girder	Non-Standard
26	K1	S 11th Ave Underpass	Primary	Bathtub girder	Non-Standard
27	K1	South BNSF Viaduct	Primary	Standard viaduct	Standard
				Straddle bent supports	Non-Standard
				Steel truss structure	Complex
28	K1	Cross Creek Viaduct	Primary	Standard viaduct	Standard
				Steel truss structure	Complex
29	K2	Idaho Ave Underpass	Primary	Bathtub girder	Non-Standard
30	K2	12th Ave Underpass	Primary	Bathtub girder	Non-Standard
31	K2	S 11th Ave Underpass	Primary	Bathtub girder	Non-Standard
32	K2	Kent Ave Underpass	Primary	Bathtub girder	Non-Standard
33	K2	Kansas Ave Underpass	Primary	Bathtub girder	Non-Standard
34	K2	Cross Creek Viaduct	Primary	Standard viaduct	Standard
				Steel truss structure	Complex
35	K3	State Route 43 Underpass	Primary	Steel truss structure	Complex

04/02/2014 - RFP No.: HSR 13-57

No.	Alignment	Name of Structure	General Classification	Technical Classification	
				Structure Types Specified	Classification
36	K3	Cross Creek Viaduct	Primary	Standard viaduct	Standard
				Steel truss structure	Complex
				Elevated slab structure	Complex
37	K4	State Route 43 Underpass	Primary	Steel truss structure	Complex
38	K4	Cross Creek Viaduct	Primary	Standard viaduct	Standard
				Steel truss structure	Complex
39	K5	Idaho Ave Underpass	Primary	Bathtub girder	Non-Standard
40	K5	12th Ave Underpass	Primary	Standard viaduct	Standard
41	K5	11th Ave Underpass	Primary	Standard viaduct	Standard
42	K5	Cross Creek Viaduct	Primary	Standard viaduct	Standard
				Steel truss structure	Complex
43	K5	BNSF Viaduct	Primary	Standard viaduct	Standard
				Straddle bent supports	Non-Standard
44	K6	Idaho Ave Underpass	Primary	Bathtub girder	Non-Standard
45	K6	12th Ave Underpass	Primary	Standard viaduct	Standard
46	K6	Kent Ave Underpass	Primary	Standard viaduct	Standard
47	K6	11th Ave Underpass	Primary	Standard viaduct	Standard
48	K6	Kansas Ave Underpass	Primary	Bathtub girder	Non-Standard
49	K6	Cross Creek Viaduct	Primary	Standard viaduct	Standard
				Steel truss structure	Complex

04/02/2014 - RFP No.: HSR 13-57

No.	Alignment	Name of Structure	General Classification	Technical Classification	
				Structure Types Specified	Classification
50	C1	Corcoran Viaduct	Primary	Standard viaduct	Standard
				Balanced cantilever	Non-Standard
51	C1	Tule River Bridge	Primary	Standard viaduct	Standard
52	C2	Whitley Avenue Underpass	Primary	Half-through steel girder	Non-Standard
53	C2	State Route 43 BNSF Viaduct	Primary	Standard viaduct	Standard
				Elevated slab structure	Complex
54	C3	Boswell Spur Viaduct	Primary	Standard viaduct	Standard
				Balanced cantilever	Non-Standard
55	C3	Sweet Canal Bridge	Primary	Standard viaduct	Standard
56	C3	Tule River Bridge	Primary	Standard viaduct	Standard
57	A1	Deer Creek Viaduct	Primary	Standard viaduct	Standard
58	A2	Deer Creek Viaduct	Primary	Standard viaduct	Standard
				Balanced cantilever	Non-Standard
59	A2	North County Line Creek Bridge	Primary	Bathtub girder	Non-Standard
60	A2	South County Line Creek Bridge	Primary	Bathtub girder	Non-Standard
61	L1	Poso Creek Bridge	Primary	Standard viaduct	Standard
62	L2	Poso Creek Viaduct	Primary	Standard viaduct	Standard
				Elevated slab structure	Complex
63	L2	Whisler Road Underpass	Primary	Bathtub girder	Non-Standard
64	L3	Poso Creek Bridge	Primary	Standard viaduct	Standard
65	L4	Poso Creek Bridge	Primary	Standard viaduct	Standard

04/02/2014 - RFP No.: HSR 13-57

No.	Alignment	Name of Structure	General Classification	Technical Classification	
				Structure Types Specified	Classification
66	L4	BNSF Viaduct	Primary	Standard viaduct	Standard
				Elevated slab structure	Complex
67	WS1	State Route 46 Underpass	Primary	Standard viaduct	Standard
68	WS1	Wasco Viaduct	Primary	Standard viaduct	Standard
				Elevated slab structure	Complex
69	WS1	Kimberlina Road Underpass	Primary	Bathtub girder	Non-Standard
70	WS1	Shafter Viaduct	Primary	Standard viaduct	Standard
				Balanced cantilever	Non-Standard
				Elevated slab structure	Complex
71	WS2	Wasco Viaduct	Primary	Standard viaduct	Standard
				Elevated slab structure	Complex
				Straddle bent supports	Non-Standard
72	B1	Hageman Road Underpass	Primary	Standard viaduct	Standard
73	B1	Allen Road Underpass	Primary	Steel truss structure	Complex
74	B1	Bakersfield Viaduct	Primary	Standard viaduct	Standard
				Balanced cantilever	Non-Standard
				Straddle bent supports	Non-Standard
				Steel truss structure	Complex
				Elevated station structure	Complex
75	B2	Hageman Road Underpass	Primary	Standard viaduct	Standard
76	B2	Allen Road Underpass	Primary	Steel truss structure	Complex

04/02/2014 - RFP No.: HSR 13-57

No.	Alignment	Name of Structure	General Classification	Technical Classification	
				Structure Types Specified	Classification
77	B2	Bakersfield Viaduct	Primary	Standard viaduct	Standard
				Balanced cantilever	Non-Standard
				Straddle bent supports	Non-Standard
				Steel truss structure	Complex
				Elevated station structure	Complex
78	B3	Hageman Road Underpass	Primary	Standard viaduct	Standard
79	B3	Allen Road Underpass	Primary	Steel truss structure	Complex
80	B3	Bakersfield Viaduct	Primary	Standard viaduct	Standard
				Balanced cantilever	Non-Standard
				Straddle bent supports	Non-Standard
				Steel truss structure	Complex
				Elevated station structure	Complex

04/02/2014 - RFP No.: HSR 13-57

Table 3.6-2
Ancillary Structure Classification

No.	Alignment	Name of Structure	General Classification	Technical Classification	
				Structure Types Specified	Classification
4	F1	Tulare Street UPRR Underpass	Secondary	Steel girder structure	N/A
5	F1	Ventura Street UPRR Underpass	Secondary	Bathtub girder	N/A
17	HW	E Conejo Ave BNSF Underpass	Secondary	Prestressed box girder	N/A
18	HW	SJVR Overpass (At-Grade)	Secondary	Steel-composite structure	N/A
22	HW2	E Conejo Ave BNSF Underpass	Secondary	Prestressed box girder	N/A
23	HW2	SJVR Overpass (Below-Grade)	Secondary	Concrete through-girder structure	N/A

04/02/2014 - RFP No.: HSR 13-57

Table 3.6-3
Mainline Structure Key Constraints

No.	Alignment	Name of Structure	Key Constraints
1	F1	Fresno Street Underpass	Precast concrete bath-tub girders are proposed. An intermediate bent has been added to reduce structure depth to 4ft 0in because of vertical alignment constraints.
2	F1	Tulare Street Underpass	Precast concrete bath-tub girders are proposed.
3	F1	Ventura Street Underpass	Precast concrete bath-tub girders are proposed. An intermediate bent is added to reduce structure depth to 4ft 0in and achieve a 17ft 0in vertical clearance. As vertical alignment is constrained, no further roadway depression is needed.
6	F1	Jensen Trench	The alignment is depressed in this location to allow a 24-foot vertical clearance under East Jensen Avenue. Design varies has been requested for the tight vertical clearance. A U-trough structure is proposed to limit the HST right-of-way and also due to the fact the area is a designated floodplain. A floodwater equalization siphon is designed to allow flood water to pass in the case of flood.
7	F1	Fresno Viaduct	The viaduct passes over several existing roadways at skew where column positions are constrained and large spans are required. Steel truss structures are therefore proposed to make these roadway crossings. Abut 1 to Bent 2: To minimize interruptions to Golden State Blvd, no column to be placed at the median between northbound and southbound of Golden State Blvd. The span is also constrained by the vertical roadway clearance. A steel truss requires only 7.5ft from TOR to soffit, which provides 18-foot-4-inch vertical clearance. A 315-foot steel truss is proposed at this location to clear horizontal constraint. Bent 33 to Bent 36: The viaduct crosses S Cedar Ave and SR 99 at high skew angles, which result long span lengths. A curved top truss is proposed to span over S Cedar Avenue, providing span length of 355 feet. Constant depth truss is proposed to span over SR99, providing span lengths of 250ft and 245ft.

04/02/2014 - RFP No.: HSR 13-57

No.	Alignment	Name of Structure	Key Constraints
8	H	Conejo Viaduct	The viaduct crosses over the BNSF mainline at very high skew. An elevated slab structure is proposed when crossing over the BNSF right-of-way to provide a crossing with minimum structural depth, to achieve a 24-foot vertical clearance with minimum profile. Two BNSF tracks are already provided in this area and so consideration for an additional track is not required, in accordance with the BNSF future provision policy outlined in Section 2.5.3.
10	H	Kings River Viaduct	The viaduct passes over several watercourses – Cole Slough, Dutch John Cut, and Kings River – which are bound by flood protection levees; some designated as USACE levees. The alignment has been chosen to meet levee vertical clearance of 18ft. Spans up to 315ft are required when spanning over these watercourses. A minimum clearance of 15ft from the toe of levee is required to any part of the structure. Truss lengths are based on the use of 35-foot bay increments. Abut 2 to Bent 3: The viaduct spans over future and existing SR 43 at high skew requiring a total span of 210ft. A single-span truss structure is proposed to provide 18-foot-0-inch vertical clearance with no constraint to future median location. Bent 19 to Bent 20: The viaduct spans over Cole Slough with USACE levees on both sides. A 350-foot truss is proposed to provide a 19-foot 4-inch vertical clearance. Bent 45 to Bent 47: The viaduct spans over Dutch John Cut and clears the flood way and Levees on both sides. Providing vertical clearance of 21ft 7in, one bent is provided between levees to limit effects on water flow. Bent 95 to Bent 97: The viaduct spans over Kings River and Levees on Both sides with minimum 23ft 3in vertical clearance. One bent is provided between levees to limit effects on water flow. Bent 102 to Abut 103: The viaduct spans over Levee Road. Truss structure is proposed to avoid increased length of viaduct and provides vertical clearance of 19ft 5in.

04/02/2014 - RFP No.: HSR 13-57

No.	Alignment	Name of Structure	Key Constraints
11	H	Hanford Viaduct	The viaduct is designed to accommodate Hanford Station, which includes station approaches, station at platform. The approach structures are simply supported and continuous PT box girders. The proposed structure type allows spans of up to 160ft with a 12-foot structure depth. Provided continuity is achieved, the structure at the platforms is narrower and can carry four tracks. Platform structures are separated from the track structure above ground. This configuration avoids vibration between track and platform. It also allows for the platforms being constructed at a later date.
12	HW	E Conejo Ave HST Underpass	Precast concrete bathtub girders are proposed.
13	HW	Kings River Viaduct (At-Grade)	Two sets of balanced cantilever spans are proposed at Grant Canal and Douglas Ave. The Grant Canal span is controlled by bent location between realigned ditch and Grant Canal, and horizontal clearance to levee. The current span length of 180ft allows a 33-foot 11-inch clearance to levee toe. Douglas Avenue Span is also controlled by horizontal clearance, current proposal shows an 18-foot 5-inch minimum clearance, as Douglas Avenue sits on a USACE levee.
14	HW	Grangeville Blvd Underpass (At-Grade)	Precast concrete bath-tub girders are proposed with structure depth of 8ft 0in, where 16-foot 10-inch vertical clearance is achieved without further depressing Grangeville Blvd profile.
15	HW	W Lacey Blvd Underpass (At-Grade)	A concrete box structure is proposed for this short (66-foot span) and wide (144ft) width structure. Concrete box structure would reduce cost of constructing long abutments and provides moment continuity with the top slab of the structure.
16	HW	13th Ave Underpass (At-Grade)	A concrete box structure is proposed for 13th Ave Underpass. The HSR alignment crosses over 13th Ave with a high skew (~60°). A conventional bridge at this skew angle would not comply with the requirements of TMs and so a buried box structure is proposed.
19	HW2	E Conejo Ave HST Underpass	Precast concrete bath-tub girders are proposed with structure depth of 7ft 0in, where a 20-foot 11-inch vertical clearance is achieved.

04/02/2014 - RFP No.: HSR 13-57

No.	Alignment	Name of Structure	Key Constraints
20	HW2	Kings River Viaduct (Below-Grade)	Two sets of balanced cantilever spans are proposed at Grant Canal and Levee Road span are controlled by horizontal clearance. Grant Canal span are controlled by bent location between realigned ditch and Grant Canal, and horizontal clearance to levee. The current span length is 180ft. Levee Road span south of Kings River is also controlled by horizontal clearance, current proposal shows 33ft 4in minimum clearance.
21	HW2	Grangeville Blvd Underpass (Below-Grade)	Precast concrete bath-tub girders are proposed with structure depth of 8ft 0in, where a 16-foot 10-inch vertical clearance is achieved without further depressing Grangeville Blvd profile.
24	K1	Idaho Ave Underpass	Precast concrete bath-tub girders are proposed with structure depth of 7ft 0in, where a 16-foot 6-inch vertical clearance is achieved.
25	K1	12th Ave Underpass	Precast concrete bath-tub girders are proposed with structure depth of 9ft 0in, where a 16-foot 6-inch vertical clearance is achieved. Adjusted skew of 30° is proposed at abutments to an increased span.
26	K1	S 11th Ave Underpass	Precast concrete bath-tub girders are proposed with structure depth of 7ft 0in, where a 16-foot 6-inch vertical clearance is achieved. This minimizes depth of underpass.
27	K1	South BNSF Viaduct	The viaduct passes over BNSF at high skew. Straddle bents are proposed for Bent 23 to Bent 24, and Bent 27 to Bent 29 spanning over BNSF and providing a minimum 25-foot horizontal clearance to BNSF track. The viaduct profile is controlled by BNSF vertical clearance of 24ft. In this location it has not been possible to clear span the BNSF right-of-way because this would require excessive straddle bent spans.

04/02/2014 - RFP No.: HSR 13-57

No.	Alignment	Name of Structure	Key Constraints
28	K1	Cross Creek Viaduct	The viaduct passes over Cross Creek at a skew requiring a total span of 325ft to provide a levee vertical clearance of 17ft 0in. A single-span truss structure is specified in this location due to its minimal structural depth, thus, minimize viaduct length. Additionally, a hydraulic analysis of the flood flow in the channel demonstrated that a bridge pier in the channel would cause scour hole of sufficient size to destabilize the levees on both banks. Bent 78 to Bent 80: The viaduct crosses over SR43 at skew. HST structure needs to be supported transversely. Elevated slab is proposed to provide minimum foundation footprint, where piles can be placed between canal and SR43. The structure also provides for future widening of the SR43 by others.
29	K2	Idaho Ave Underpass	Precast concrete bath-tub girders are proposed with structure depth of 7ft 0in, where 16ft 8in vertical clearance is achieved.
30	K2	12th Ave Underpass	Precast concrete bath-tub girders are proposed with structure depth of 9ft 0in, where 17ft 0in vertical clearance is achieved. Adjusted skew of 30° is proposed at abutments to avoid structure complexity and provide reduced span length.
31	K2	S 11th Ave Underpass	Precast concrete bath-tub girders are proposed with structure depth of 8ft 0in, where 16ft 8in vertical clearance is achieved. Adjusted skew of 30° is proposed at abutments to avoid structure complexity and provide reduced span length.
32	K2	Kent Ave Underpass	Precast concrete bath-tub girders are proposed with structure depth of 7ft 0in, where 17ft 0in vertical clearance is achieved.
33	K2	Kansas Ave Underpass	Precast concrete bath-tub girders are proposed with structure depth of 7ft 0in, where 17ft 0in vertical clearance is achieved.
34	K2	Cross Creek Viaduct	The viaduct passes over Cross Creek at a skew requiring a total span of 325 ft to clear levee clearance of 18ft. A single-span truss structure is specified in this location due to its minimal structural depth, thus, minimize viaduct length.
35	K3	State Route 43 Underpass	SR43 Underpass spans over SR43 at high skew. Span is constrained by horizontal clearance of SR43. Span 2 is for future SR43 widening.

04/02/2014 - RFP No.: HSR 13-57

No.	Alignment	Name of Structure	Key Constraints
36	K3	Cross Creek Viaduct	The viaduct passes over Cross Creek at a skew requiring a total span of 322ft to clear levee clearance of 19ft 0in. A single-span truss structure is specified in this location due to its minimal structural depth, thus, minimize viaduct length. Additionally, a hydraulic analysis of the flood flow in the channel demonstrated that a bridge pier in the channel would cause scour hole of sufficient size to destabilize the levees on both banks. Bent 60 to Bent 61: The viaduct crosses over BNSF at high skew. Elevated slab structure is proposed at this location. The elevated slab has structure depth of 6ft, which helps in achieving 24ft minimum vertical clearance over BNSF.
37	K4	State Route 43 Underpass	SR43 Underpass spans over SR43 at high skew. Span is constrained by horizontal clearance of SR43. Span 2 is for future SR43 widening.
38	K4	Cross Creek Viaduct	The viaduct passes over Cross Creek at a skew requiring a total span of 322ft to clear levee clearance 17ft 1in. A single-span truss structure is specified in this location due to its minimal structural depth, thus, minimizing viaduct length. Additionally, a hydraulic analysis of the flood flow in the channel demonstrated that a bridge pier in the channel would cause scour hole of sufficient size to destabilize the levees on both banks. Bent 78 to Bent 80: The viaduct crosses over SR43 at skew. HST structure needs to be supported transversely. Elevated slab is proposed to provide minimum foundation footprint, where piles can be placed between canal and SR43.
39	K5	Idaho Ave Underpass	Precast concrete bath-tub girders are proposed with structure depth of 7ft 0in, where 16ft 7in vertical clearance is achieved.
40	K5	12th Ave Underpass	Standard concrete box girder is proposed with structure depth of 12ft 0in, where 17ft 4in vertical clearance is achieved. Adjusted skew of 30° is proposed at abutments to avoid structure complexity and provide reduced span length.
41	K5	11th Ave Underpass	Standard concrete box girder is proposed with structure depth of 12ft 0in, where 16ft 6in vertical clearance is achieved.

04/02/2014 - RFP No.: HSR 13-57

No.	Alignment	Name of Structure	Key Constraints
42	K5	Cross Creek Viaduct	The viaduct passes over Cross Creek at skew requiring a total span of 357ft to clear levee clearance of 17ft 0in. A single-span truss structure is specified in this location due to its minimal structural depth, thus, minimizing viaduct length. Additionally, a hydraulic analysis of the flood flow in the channel demonstrated that a bridge pier in the channel would cause scour hole of sufficient size to destabilize the levees on both banks.
43	K5	BNSF Viaduct	The viaduct passes over BNSF at skew. Viaduct height/length is constrained by BNSF vertical clearance. Straddle bents are proposed to span over BNSF mainline and providing 25ft minimum horizontal clearance. In this location it has not been possible to clear span the BNSF right-of-way because this would require excessive straddle bent spans.
44	K6	Idaho Ave Underpass	Precast concrete bath-tub girders are proposed with structure depth of 7ft 0in, where 16ft 11in vertical clearance is achieved.
45	K6	12th Ave Underpass	Box girder can be constructed either in situ or precast. Standard Box Girder is proposed to span over 120ft, allowing 20ft 4in vertical clearance.
46	K6	Kent Ave Underpass	Box girder can be constructed either in situ or precast. Standard Box Girder is proposed to span over 113ft, allowing 17ft 7in vertical clearance.
47	K6	11th Ave Underpass	Box girder can be constructed either in situ or precast. Standard Box Girder is proposed to span over 102ft, allowing 17ft 9in vertical clearance.
48	K6	Kansas Ave Underpass	Precast concrete bath-tub girders are proposed with structure depth of 8ft 0in, where 17ft 5in vertical clearance is achieved.
49	K6	Cross Creek Viaduct	The viaduct passes over Cross Creek at skew requiring a total span of 325ft to clear levee clearance of 16ft 6in. A single-span truss structure is specified in this location due to its minimal structural depth, thus, minimizing viaduct length. Additionally, a hydraulic analysis of the flood flow in the channel demonstrated that a bridge pier in the channel would cause scour hole of sufficient size to destabilize the levees on both banks.

04/02/2014 - RFP No.: HSR 13-57

No.	Alignment	Name of Structure	Key Constraints
50	C1	Corcoran Viaduct	Corcoran Viaduct passes through city of Corcoran. The viaduct is 22,996ft long, with HST station, and various types of structures. The height is dominated by BNSF. Proposed relocations include canal and local streets. Bent 28 to Bent 31: The viaduct passes over future and existing SR43 at skew. Straddle bents with Standard Box Girder structures are proposed to minimize span length. Bent 60 to Bent 63: The viaduct passes over BNSF Spur at skew, requiring a total span of 200ft. A three-span balanced cantilever structure is proposed. Bent 67 to Bent 70: The viaduct passes over Yoder Blvd and Brokaw Ave intersection, requiring a total span of 180ft. A three-span balanced cantilever structure is proposed. Bent 74 to Bent 77: The viaduct passes over BNSF Spur at high skew, requiring a total span of 200ft. A three-span balanced cantilever structure is proposed. Bent 78 to Bent 79: The viaduct passes over Whitley Ave at skew. To avoid intermediate support at Whitley Ave, a 217foot span steel truss is proposed. Bent 86 to Bent 89: The viaduct passes over BNSF Spur at high skew, requiring a total span of 200ft. A three-span balanced cantilever structure is proposed. Bent 136 to Bent 137: The viaduct passes over BNSF at a very high skew. Elevated slab is proposed to span over BNSF transversely. The elevated slab has structure depth of 6ft, which helps in achieving 24 foot minimum vertical clearance over BNSF.
51	C1	Tule River Bridge	The bridge length is constrained by abutment locations being placed outside of the river bank. A two-span structure has been chosen to ensure a column is placed in the channel. Bent 2 is proposed to cut the spans to 120ft.
52	C2	Whitley Avenue Underpass	Steel half through girder is proposed to minimize the structure depth. This avoids increasing the length of the adjacent viaduct.
53	C2	State Route 43 BNSF Viaduct	The viaduct passes over BNSF and SR43 at the same time at a very high skew. Elevated slab is proposed to span over BNSF and SR43 transversely in two segments. The elevated slab has structure depth of 6ft, which helps in achieving 24 foot minimum vertical clearance over BNSF.

04/02/2014 - RFP No.: HSR 13-57

No.	Alignment	Name of Structure	Key Constraints
54	C3	Boswell Spur Viaduct	The viaduct passes over BNSF spur at a skew requiring a total span of 160ft to clear horizontal clearance of 15ft minimum. A three-span balanced cantilever structure is proposed. 27ft 9in vertical clearance is achieved.
55	C3	Sweet Canal Bridge	Standard 120 foot 0in concrete box is proposed to span over the proposed Sweet Canal realignment.
56	C3	Tule River Bridge	The bridge length is constrained by abutment locations being placed outside of the river bank. Bent 2 is proposed to ensure a column is placed within the channel.
57	A1	Deer Creek Viaduct	The viaduct passes over Deer Creek and Stoil Spur. There is no given restraint in preventing placing columns in Dear Creek. Column is placed in Deer Creek channel to allow standard 120 foot span structure. Viaduct length is constrained at Stoil Spur vertical clearance of 24ft 6in. 120 foot standard span is proposed to span over Stoil Spur with sufficient horizontal clearance (30ft 7in).
58	A2	Deer Creek Viaduct	The viaduct passes over Stoil Spur at a skew requiring a total span of 160ft to provide horizontal clearance of 32ft 11in. A three-span balanced cantilever structure is proposed. 30 foot 2-inch vertical clearance is achieved.
59	A2	North County Line Creek Bridge	The bridge length is constrained by abutment locations being placed outside of the river bank. Bent 2 is proposed to ensure a pier in the channel. A square structure is proposed as there is no clear stream channel that identifies a flow preference. Bath tub girders are proposed for the short spans.
60	A2	South County Line Creek Bridge	The bridge length is constrained by abutment locations being placed outside of the river bank. Bent 2 is proposed to ensure a pier in the channel. A square structure is proposed as there is no clear stream channel that identifies a flow preference. Bath tub girders are proposed for the short spans.
61	L1	Poso Creek Bridge	The bridge length is constrained by abutment locations being placed outside of the river bank. A two-span structure has been chosen to ensure a column is placed in the channel. Bent 2 is proposed to cut the spans to 120ft.

04/02/2014 - RFP No.: HSR 13-57

No.	Alignment	Name of Structure	Key Constraints
62	L2	Poso Creek Viaduct	The viaduct passes over BNSF and SR43 at a very high skew. Elevated slab is proposed to span over BNSF and SR43 transversely in two segments. The elevated slab has structure depth of 6ft, which helps in achieving 24 foot minimum vertical clearance over BNSF.
63	L2	Whisler Road Underpass	Precast concrete bath-tub girders are proposed with structure depth of 6ft 0in, 16ft 6in vertical clearance is achieved.
64	L3	Poso Creek Bridge	The bridge length is constrained by abutment locations being placed outside of the river bank. A two-span structure has been chosen to ensure a column is placed in the channel. Bent 2 is proposed to cut the spans to 120ft.
65	L4	Poso Creek Bridge	The bridge length is constrained by abutment locations being placed outside of the river bank. A two-span structure has been chosen to ensure a column is placed in the channel. Bent 2 is proposed to cut the spans to 120ft.
66	L4	BNSF Viaduct	The viaduct passes over BNSF and SR43 at the same time at a very high skew. Elevated slab is proposed to span over BNSF and SR43 transversely in two segments. The elevated slab has structure depth of 6ft, which helps in achieving 24 foot minimum vertical clearance over BNSF.
67	WS1	State Route 46 Underpass	Standard concrete box is proposed to span over SR 46 for avoiding changing construction type and method. 120 foot span is proposed for future widening of SR46. Vertical clearance of 16ft 7in is achieved.
68	WS1	Wasco Viaduct	The viaduct passes over BNSF at a very high skew. Elevated slab is proposed to span over BNSF transversely. The elevated slab has structure depth of 6’, which helps in achieving 24 foot minimum vertical clearance over BNSF.
69	WS1	Kimberlina Road Underpass	Precast concrete bath-tub girders are proposed with structure depth of 6ft 0in, where 16ft 6in vertical clearance is achieved.

04/02/2014 - RFP No.: HSR 13-57

No.	Alignment	Name of Structure	Key Constraints
70	WS1	Shafter Viaduct	Shafter Viaduct passes over BNSF, spurs, and local streets. Some pile caps are rotated to minimize impact to local streets. Elevated slab and longer spans are proposed spanning over BNSF and spurs. Bent 38 to Bent 39: The structure spans over BNSF spur at a skew requiring a total span of 145ft to achieve horizontal clearance of 14ft 3in, given the spur is inactive. A three-span balanced cantilever structure is proposed. Bent 66 to Bent 67: The structure spans over junction of S Beech Ave and E Los Angeles Ave, requiring a total span of 160ft. A three-span balanced cantilever structure is proposed. Bent 70 to Bent 71: The viaduct passes over BNSF at a very high skew. Elevated slab is proposed to span over BNSF transversely. The elevated slab has structure depth of 6ft, which helps in achieving 24 foot minimum vertical clearance over BNSF.
71	WS2	Wasco Viaduct	The viaduct passes over BNSF and 7th Standard Road. The profile is constrained by 7th Standard Road. Elevated slab and large straddle bents are proposed crossing BNSF. Bent 10 to Bent 11: The viaduct passes over proposed BNSF at a very high skew. Elevated slab is proposed to span over BNSF transversely. The elevated slab has structure depth of 6ft, which helps in achieving 24 foot minimum vertical clearance over BNSF. Bent 13 to Bent 14: The viaduct passes over existing BNSF at a very high skew. Although vertical clearance is not a constraint, elevated slab is proposed to span over BNSF transversely. Bent 46 to Bent 47: The viaduct spans over 7th Standard Road, requiring a total span of 170ft for new construction, vertical clearance of 16ft 6in. A three-span balanced cantilever structure is proposed.
72	B1	Hageman Road Underpass	Hageman Road Underpass is constrained by the roadway width and vertical clearance Hageman Road Ave. Standard concrete box girders are proposed with additional bent in the middle to cut the span to 100ft.
73	B1	Allen Road Underpass	The structure spans over Allen Road at a skew, requiring a total span of 318ft 6in. A single-span truss structure is specified in this location due to limited information on Allen Road. Vertical clearance of 18ft 6in is achieved.

04/02/2014 - RFP No.: HSR 13-57

No.	Alignment	Name of Structure	Key Constraints
74	B1	Bakersfield Viaduct	Bakersfield Viaduct passes through city of Bakersfield. The viaduct is 49190ft long, with HST station, and various types of structures. The height is dominated by vertical clearance to the Westside Parkway. Proposed relocations include BNSF, canal, and local streets. Bent 7 to Bent 8: The viaduct passes over Calloway Drive, requiring a total span of 180ft to minimize impact of pile cap construction. A three-span balanced cantilever structure is proposed. Bent 14 to Bent 15: The viaduct passes over Thistlewood Ct at high skew, requiring a total span of 160ft. A three-span balanced cantilever structure is proposed. Bent 42 to Bent 47: The viaduct passes over Brimhall Rd at high skew, requiring straddle bents to support transversely. Spans from Bent 45 to Bent 46 are proposed to be 150ft to avoid relocating local streets. A three-span balanced cantilever structure is proposed. Bent 54 to Bent 55: The viaduct passes over Coffee Rd, requiring a total span of 180ft to minimize impact of pile cap construction. A three-span balanced cantilever structure is proposed. Bent 58 to Bent 59: The viaduct passes over Westside Parkway at high skew, requiring a total span of 150ft. A three-span balanced cantilever structure is proposed. Bent 65 to Bent 66: The viaduct passes over Friant-Kern Canal Spillway, requiring a total span of 160ft to clear the historic canal structure. A three-span balanced cantilever structure is proposed. Bent 82 to Bent 92: The viaduct passes over Westside Parkway at high skew. Straddle bents are proposed to allow the HST viaduct to be constructed above the roadway. The HST profile is set up high given limited information provided for Westside Parkway. Bent 120 to Bent 121: The viaduct passes over Mohawk St, requiring a total span of 160ft. A three-span balanced cantilever structure is proposed. Bent 137 to Bent 139: The viaduct spans over Westside Parkway Ramp and Proposed Centennial Corridor Ramp without placing any support in between. This allows flexibility of unknown design, and requires span length of 357ft between Bent 138 and Bent 139. Due to the location of Bent 138, Bent 137 is located on the west side of Truxtun Ave, which requires another 357 foot span. Steel truss structures are proposed at these locations.

04/02/2014 - RFP No.: HSR 13-57

No.	Alignment	Name of Structure	Key Constraints
			Bent 149 to Bent 150: The viaduct passes over Gates Canal at high skew, requiring a total span of 160ft. A three-span balanced cantilever structure is proposed. Bent 175 to Bent 176: The viaduct passes over SR99. Since SR99 is on a structure at this point, a median column is not possible. Large span is required at this location. Steel truss of 287ft is proposed at this location. Bent 180 to Bent 182: The viaduct passes over BNSF at high skew. Straddle bents are proposed. Minimum horizontal clearance is 6ft 3in, which requires rearrangement of BNSF tracks in future design. Bent 185 to Bent 186: The viaduct passes over Oak Street without intermediate support, requiring a total span of 160ft. A three-span balanced cantilever structure is proposed. Bent 216 to Bent 217: The viaduct passes over a few BNSF track at skew. Straddle bents are proposed. Minimum horizontal clearance is 10ft 0in, which requires crash barriers to for protection. Bent 236 to Bent 237: The viaduct passes over Chester Ave without intermediate support, requiring a total span of 160ft. A three-span balanced cantilever structure is proposed. Bent 247 to Bent 296: Bakersfield station and station approaches. Bent 249 to Bent 263: Station approach structure passes over BNSF mainline and spurs. Straddle bents are proposed to support structure transversely. Minimum horizontal clearance is 9ft 8in, which requires crash barriers to for protection. Bent 264: Station structure requires straddle bent to support over BNSF main line. Minimum horizontal clearance is 14ft 5in, which requires crash barriers to for protection. Bent 276 to Bent 277: Station approach structure crosses over Union Ave/SR 204. The width of Union Ave/SR 204 requires station approach structure spanning 150ft. This is the maximum span proposed for approach structure without increasing structure depth. Bent 280, Bent 281, Bent 284, Bent 288, Bent 289, and Bent 293: Columns in each bent are offset in the longitudinal direction to follow the skew of the local street. Bent 301 to Bent 302: Straddle bents are proposed to crossover Eureka St

04/02/2014 - RFP No.: HSR 13-57

No.	Alignment	Name of Structure	Key Constraints
			and King St at the crossing. Bent 311 to Bent 312: Straddle bents are proposed to crossover E 18th St at high skew. Bent 323 to Bent 324: Straddle bents are proposed to crossover E 19th St at high skew. Bent 345 to Bent 346: 160 foot span is proposed to span over Washington St. with 100 foot back span crossing over BNSF. Bent 368 to Bent 369: Span over Mt Vernon Ave, providing 21ft 11in vertical clearance.
75	B2	Hageman Road Underpass	Standard concrete box girders are proposed with additional bent in the middle to cut the span to 100ft.
76	B2	Allen Road Underpass	The structure spans over Allen Road at a skew, requiring a total span of 318ft 6in. A single-span truss structure is specified in this location due to limited information on Allen Road. Vertical clearance of 18ft 6in is achieved.
77	B2	Bakersfield Viaduct	Bakersfield Viaduct passes through city of Bakersfield. The viaduct is 49629ft long, with HST station, and various types of structures. The viaduct height is dominated by vertical clearance to the Westside Parkway. Proposed relocations include canal, and local streets. Bent 12 to Bent 13: The viaduct passes over Calloway Dr. Bent 13 is placed with Slikker Dr to be closed. To span over Calloway Dr without support in the middle, a 322 foot truss structure is proposed. Bent 59 to Bent 60: The viaduct passes over Coffee Rd without intermediate support at intersection, requiring a total span of 180ft. A three-span balanced cantilever structure is proposed. Bent 68 to Bent 79: Proposed Westside Parkway is right below HST alignment. The viaduct would need to be supported by series of straddle bents in transversely at these locations. Bent 105 to Bent 109: Proposed Westside Parkway is right below HST alignment. The viaduct would need to be supported by series of straddle bents in transversely at these locations. Bent 126 to Bent 127: The viaduct passes over Mohawk St without intermediate support at the intersection, requiring a total span of 170ft. A

04/02/2014 - RFP No.: HSR 13-57

No.	Alignment	Name of Structure	Key Constraints
			three-span balanced cantilever structure is proposed. Bent 130: Straddle bent is proposed to avoid long span over Cross valley Canal. Bent 141 to Bent 149: 8 spans of steel truss structure are proposed. The viaduct passes over proposed Westside Parkway, Proposed Centennial Corridor Ramp, Truxtun Ave, and BNSF at high skews, and different directions. The physical restraint makes placing bent supports very difficult. Bent 142, Bent 144, Bent 145, Bent 146, and Bent 148 need to be straddled to avoid conflict. Bent 173 to Bent 174: The viaduct passes over SR99 without intermediate support, requiring a total span of 180ft. Because SR99 is on a structure at this point, a median column is not possible. A three-span balanced cantilever structure is proposed. Bent 185 to Bent 186: The viaduct passes over Oak St without intermediate support. A three-span balanced cantilever structure is proposed providing 180′ center span. Bent 236 to Bent 237: The viaduct passes over Chester Ave without intermediate support, requiring a total span of 160ft. A three-span balanced cantilever structure is proposed. Bent 238 to Bent 249: The viaduct passes over BNSF mainlines at high skew. Straddle bents are proposed to span over transversely. Bent 245 to Bent 295: Bakersfield station and station approaches. Bent 257 to Bent 259: Bents are placed at the edge of O St and Kern Island Canal to allow minimum span over O St and Kern Island Canal. Span lengths of 140ft and 130ft are proposed, and standard structure depth can be assumed with continuous construction. Bent 276 to Bent 277: The station approach structure passes over Union Ave without intermediate support, requiring a total span of 150ft, and standard structure depth can be assumed with continuous construction. Bent 287, Bent 288, Bent 291, and Bent 292: Columns in each bent are offset in longitudinal direction to follow the skew of the local street. Bent 296 to Bent 298: Straddle bents are proposed to crossover Butte St at high skew. Bent 315 to Bent 316: Straddle bents are proposed to crossover Chico St at

04/02/2014 - RFP No.: HSR 13-57

No.	Alignment	Name of Structure	Key Constraints
			high skew. Bent 323 to Bent 378: The viaduct alignment is placed on top of E California Ave. In the case median is available, column can be place at the median of E California Ave. Otherwise, straddle bents are proposed to span over E California Ave.
78	B3	Hageman Road Underpass	Hageman Road Underpass is constrained by the roadway width and vertical clearance Hageman Road Ave. Standard concrete box girders are proposed with additional bent in the middle to cut the span to 100ft.
79	B3	Allen Road Underpass	The structure spans over Allen Road at a skew, requiring a total span of 318ft 6in. A single-span truss structure is specified in this location due to its minimal structural depth. Vertical clearance of 18ft 8in is achieved.
80	B3	Bakersfield Viaduct	Bakersfield Viaduct passes through city of Bakersfield. The viaduct is 49968ft long, with HST station, and varies types of structures. The viaduct height is dominated by vertical clearance to the Westside Parkway. Proposed relocations include canal, and local streets. Bent 12 to Bent 13: The viaduct passes over Calloway Dr. Bent 13 is placed with Slikker Dr to be closed. To span over Calloway Dr without support in the middle, a 322' truss structure is proposed. Bent 59 to Bent 60: The viaduct passes over Coffee Rd without intermediate support at intersection, requiring a total span of 180ft. A three-span balanced cantilever structure is proposed. Bent 68 to Bent 79: Proposed Westside Parkway is right below HST alignment. The viaduct would need to be supported by series of straddle bents in transversely at these locations. Bent 71 to Bent 72 Spans over Friant-Kern Canal, which requires 200ft in span in order to minimize disturbance to the historical canal. Bent 105 to Bent 109: Proposed Westside Parkway is right below HST alignment. The viaduct would need to be supported by series of straddle bents in transversely at these locations. Bent 126 to Bent 127: The viaduct passes over Mohawk St without intermediate support at intersection, requiring a total span of 180ft. A three-span balanced cantilever structure is proposed. Bent 130: Straddle bent is proposed to avoid long span over Cross valley

04/02/2014 - RFP No.: HSR 13-57

No.	Alignment	Name of Structure	Key Constraints
			Canal. Bent 138 to Bent 140: Column height is greater than proposed standard, larger pile cap with greater pile group is proposed. Bent 141 to Bent 149: 8 spans of steel truss structure are proposed. The viaduct passes over proposed Westside Parkway, Proposed Centennial Corridor Ramp, Truxtun Ave, and BNSF at high skews, and different directions. The physical restraint makes placing bent supports very difficult. Bent 142, Bent 144, Bent 145, Bent 146, and Bent 148 need to be straddled to avoid conflict. Bent 173 to Bent 174: The viaduct passes over SR99 without intermediate support, requiring a total span of 180ft. Because SR99 is on a structure at this point, a median column is not possible. A three-span balanced cantilever structure is proposed. Bent 185 to Bent 186: The viaduct passes over Oak St without intermediate support, requiring a total span of 180ft. A three-span balanced cantilever structure is proposed. Bent 225 to Bent 228: The viaduct passes over Kern Island Canal and O St. The 180 foot span is controlled by Kern Island Canal width. Bent 256 is located to have minimum impact to O St and Kern Island Canal. Bent 259 to Bent 302: Bakersfield station and station approaches. Bent 262: The viaduct passes over BNSF Spur at high skew. Columns are placed outward to allow BNSF Spur crosses below the viaduct. Bent 274 to Bent 275: The station structure passes over Union Ave without intermediate support, requiring a total span of 135ft, which standard structure depth can be assumed with continuous construction. Columns in Bent 274 and Bent 275 are offset in longitudinal direction to follow the skew of Union Ave. Bent 278, Bent 279, Bent 288, Bent 297, and Bent 298: Columns in each bent are offset in longitudinal direction to follow the skew of local streets. Column offset for Bent 298 are placed as transaction between Bent 297 and Bent 299, to minimize structure impact due to eccentricity. Bent 342 to Bent 347: The viaduct passes over E Truxtun Ave at high skew. Straddle bents are proposed to support HST structure in transverse direction. Bent 344 to Bent 347 need also span over SJVR spur, which require longer straddle bents.

04/02/2014 - RFP No.: HSR 13-57

Table 3.6-4
Ancillary Structure Key Constraints

No.	Alignment	Name of Structure	Key Constraint
4	F1	Tulare Street UPRR Underpass	Steel girders are proposed for 59-foot span UPRR structure. With structure depth of 6ft 0in, 17ft 0in vertical clearance is achieved.
5	F1	Ventura Street UPRR Underpass	Bent 2 is introduced to reduce span length to 49ft, where steel girders are proposed. With structure depth of 3ft 6in, 17ft 0in vertical clearance is achieved.
17	HW	E Conejo Ave BNSF Underpass	PC/PS concrete box girders are proposed to carry BNSF rail traffic. 70 foot span is within desirable range for concrete box girder. Span length is constrained by the width of E Conejo Ave and Abut 2 height/location.
18	HW	SJVR Overpass (At-Grade)	The SJVR profile is constrained by vertical clearance of HST mainline. 27ft 3in vertical clearance is achieved with structure depth of 9ft 0in, carrying rail traffic with steel plate girder. 120 foot typical span is proposed. 129 foot span is proposed at HST crossing to achieve 25 foot minimum horizontal clearance.
22	HW2	E Conejo Ave BNSF Underpass	PC/PS concrete box girders are proposed to carry BNSF rail traffic. 70 foot span is within desirable range for concrete box girder. Span length is constrained by the width of E Conejo Ave and Abut 2 height/location.
23	HW2	SJVR Overpass (Below-Grade)	Concrete through girder is proposed to carry SJVR rail traffic. The structure is only 5ft 6in from TOR to soffit maximizes vertical clearance of 32ft 0in.
69b	WS1	Kimberlina Road BNSF Underpass	Precast concrete bath-tub girders are proposed to match structure type to Kimberlina Road Underpass HST structure. With structure depth of 8ft 0in, where 16ft 6in vertical clearance is achieved.

04/02/2014 - RFP No.: HSR 13-57

This page intentionally left blank.

04/02/2014 - RFP No.: HSR 13-57

Section 4.0

Roadway Structures

4.0 Roadway Structures

All HST roadway crossings must be grade separated for safety. Therefore, roadway structures (overcrossings) are required to span over HST tracks and facilities, and may also span existing and realigned freight rail lines, state highways, county roads, and canals. The structures shown in the preliminary design drawings have been selected and arranged where possible to provide the most practical, economical, and least impacting design solutions.

4.1 Roadway Alignment

Roadway structure plans will use the roadway alignments as shown on the 15% Record Set roadway plans (see References). The profiles for all roadway structures meet minimum design speeds and horizontal clearance standards as required by HST, Caltrans design manuals, and local criteria. When work on the 15% engineering design began, the guiding document was *Technical Memorandum 15% Design Scope Guidelines* from May 12, 2008. This TM did not specifically address local roadway design or design criteria. Therefore, the joint venture (JV) developed a guideline for local roads. These guidelines drew primarily on criteria and design standards discussed in Caltrans Highway Design Manual (HDM). This was the general design guidance used during the early production of the 15% plans.

As the project progressed, multiple meetings were held with local agencies, Caltrans, and the Authority. As a direct result of these meetings the use of "local" design criteria were formally adopted as the standard to be used. This includes a variation of City, County, and State (Caltrans) standards based upon who has jurisdiction over the particular road. Additionally there have been multiple meetings to establish and agree upon proposed design speeds for all roads impacted by the project. Table 4.1-1 lists the proposed roadway structures classification, jurisdiction and proposed design speed.

The majority of roads maintain their existing alignments, although to reduce skewed HST crossings and avoid major impacts to properties, often they were realigned. Retaining walls were used to avoid dairies, wetlands, a water treatment plant, canals, and other properties. Existing capacity and facilities were maintained unless a local jurisdiction asked for improvements, or impending improvements dictated otherwise. Shoulders are paved 8 feet for high volume >2,000 vehicles per day (vpd) roads, and 4 feet for low volume roads.

Table 4.1-1
Alignment Design Criteria

Alignment	Roadway Structure	Classification	Jurisdiction	Design Speed
F1 - Fresno	Stanislaus St	Collector	City of Fresno	30
F1 - Fresno	G St (Fresno St)	Collector	City of Fresno	40
F1 - Fresno	Tulare St (Underpass)	Collector	City of Fresno	25
F1 - Fresno	G St (Tulare St Underpass)	Collector	City of Fresno	40
F1 - Fresno	E Church Ave	Collector	City of Fresno	40
F1 - Fresno	S East Ave	Collector	City of Fresno	25
F1 - Fresno	E Central Ave	Arterial	City of Fresno	35
F1 - Fresno	E American Ave	Arterial	City of Fresno	45
M - Monmouth	E Lincoln Ave	Local	Fresno County	55
M - Monmouth	E Adams Ave	Collector	Fresno County	55
M - Monmouth	E South Ave	Local	Fresno County	55
M - Monmouth	E Manning Ave	Expressway	Fresno County	55

04/02/2014 - RFP No.: HSR 13-57

Alignment	Roadway Structure	Classification	Jurisdiction	Design Speed
M - Monmouth	E Floral Ave	Local	Fresno County	65
M - Monmouth	E Nebraska Ave	Local	Fresno County	65
M - Monmouth	E Mountain View Ave	Arterial	Fresno County	65
H - Hanford	S Clovis Ave	Local	Fresno County	65
H - Hanford	E Elkhorn Ave	Arterial	Fresno County	65
H - Hanford	S Fowler Ave	Arterial	Fresno County	65
H - Hanford	E Davis Ave	Local	Fresno County	65
H - Hanford	Dover Ave	Local	Kings County	55
H - Hanford	Excelsior Ave	Rural Collector	Kings County	55
H - Hanford	Elder Ave	Local	Kings County	55
H - Hanford	Flint Ave	Rural Arterial	Kings County	60
H - Hanford	Fargo Ave	Local	Kings County	55
H - Hanford	Hanford Armona Rd	Local	Kings County	55
H - Hanford	Houston Ave	Rural Collector	Kings County	55
H - Hanford	Iona Ave	Local	Kings County	55
HW - Hanford West	E Elkhorn Ave	Arterial	Fresno County	65
HW - Hanford West	Excelsior Ave	Rural Arterial	Kings County	60
HW - Hanford West	Flint Ave	Rural Arterial	Kings County	60
HW - Hanford West	Fargo Ave	Local	Kings County	55
HW - Hanford West	Glendale Ave	Local	City of Hanford	40
HW - Hanford West	SR198	Caltrans	City of Hanford	70
HW - Hanford West	Hanford Armona Rd	Major/Minor Arterial	City of Hanford	60
HW - Hanford West	Houston Ave	Major/Minor Arterial	City of Hanford	60
HW - Hanford West	Iona Ave	Local	Kings County	55
HW2 - (HW Below Grade)	E Elkhorn Ave	Arterial	Fresno County	65
HW2 - (HW Below Grade)	Excelsior Ave	Rural Arterial	Kings County	60
HW2 - (HW Below Grade)	Flint Ave	Rural Arterial	Kings County	60
HW2 - (HW Below Grade)	Fargo Ave	Local	Kings County	55
HW2 - (HW Below Grade)	W Lacey Boulevard	Major/Minor Arterial	City of Hanford	60
HW2 - (HW Below Grade)	13th Ave	Major/Minor Arterial	City of Hanford	60
HW2 - (HW Below Grade)	Glendale Ave	Local	City of Hanford	40
HW2 - (HW Below Grade)	SR198	Caltrans	City of Hanford	70
HW2 - (HW Below Grade)	Hanford Armona Rd	Major/Minor Arterial	City of Hanford	60
HW2 - (HW Below Grade)	Houston Ave	Major/Minor Arterial	City of Hanford	60

04/02/2014 - RFP No.: HSR 13-57

Alignment	Roadway Structure	Classification	Jurisdiction	Design Speed
K1 - Kaweah	Jackson Ave	Rural Collector	Kings County	55
K1 - Kaweah	Kansas Ave			60
K1 - Kaweah	Lansing Ave	Local	Kings County	55
K2 - Kaweah	Jackson Ave	Rural Collector	Kings County	55
K2 - Kaweah	Lansing Ave	Local	Kings County	55
K2 - Kaweah	Nevada Ave	Rural Collector	Kings County	50
K3 - Kaweah	Idaho Ave	Local	Kings County	55
K3 - Kaweah	Jackson Ave	Local	Kings County	55
K3 - Kaweah	Kent Ave	Local	Kings County	45
K3 - Kaweah	Kansas Ave	Rural Arterial	Kings County	60
K3 - Kaweah	Nevada Ave	Rural Collector	Kings County	50
K4 - Kaweah	Idaho Ave	Local	Kings County	55
K4 - Kaweah	Jackson Ave	Local	Kings County	55
K4 - Kaweah	Kent Ave	Local	Kings County	45
K4 - Kaweah	Kansas Ave	Rural Arterial	Kings County	60
K5 - Kaweah	Iona Ave	Local	Kings County	55
K5 - Kaweah	Jackson Ave	Rural Collector	Kings County	55
K5 - Kaweah	Kansas Ave	Rural Arterial	Kings County	60
K5 - Kaweah	Lansing Ave	Local	Kings County	55
K6 - Kaweah	Iona Ave	Local	Kings County	55
K6 - Kaweah	Jackson Ave	Rural Collector	Kings County	55
K6 - Kaweah	Lansing Ave	Local	Kings County	55
K6 - Kaweah	Nevada Ave	Rural Collector	Kings County	50
C1 - Corcoran	Nevada Ave	Rural Collector	Kings County	50
C1 - Corcoran	Ave 144	Local	Tulare County	45
C2 - Corcoran	Nevada Ave	Rural Collector	Kings County	50
C2 - Corcoran	Corcoran Hwy	Minor Arterial	Kings County	45
C3 - Corcoran	Charles St	Arterial	City of Corcoran	30
C3 - Corcoran	Ave 148 & Rd 24 (west)	Local	Tulare County	45
C3 - Corcoran	Ave 148 & Rd 24 (east)	Local	Tulare County	45
P - Pixley	Ave 128	Local	Tulare County	50
P - Pixley	Hesse Ave	Local	Tulare County	50
P - Pixley	Ave 112	Local	Tulare County	50
P - Pixley	Ave 88	Local	Tulare County	50
A1 - Allensworth	County Rd J22 (Ave 56)	Major Collector	Tulare County	50
A1 - Allensworth	Garces Hwy	Local	Kern County	65
A1 - Allensworth	Pond Rd	Local	Kern County	65
A1 - Allensworth	Peterson Rd	Local	Kern County	65
A2 - Allensworth	County Rd J22 (Ave 56)	Major Collector	Tulare County	50

04/02/2014 - RFP No.: HSR 13-57

Alignment	Roadway Structure	Classification	Jurisdiction	Design Speed
A2 - Allensworth	Ave 24	Local	Tulare County	50
A2 - Allensworth	Garces Hwy	Local	Kern County	65
A2 - Allensworth	Schuster Rd	Arterial	Kern County	65
A2 - Allensworth	Peterson Rd	Local	Kern County	65
L2 - Poso Creek	SR 46	Caltrans	Caltrans	65
L4 - Poso Creek	SR 46	Caltrans	Caltrans	65
WS1 - Wasco-Shafter	McCombs Ave	Arterial	Kern County	65
WS1 - Wasco-Shafter	Merced Ave	Arterial	City of Shafter	55
WS1 - Wasco-Shafter	Poplar Ave	Arterial	City of Shafter	55
WS1 - Wasco-Shafter	Fresno Ave	Arterial	City of Shafter	55
WS1 - Wasco-Shafter	Burbank St	Arterial	City of Shafter	55
WS1 - Wasco-Shafter	7th Standard Rd	Arterial	Kern County	55
WS1 - Wasco-Shafter	Kratzmeyer Rd	Collector	City of Bakersfield	55
WS1 - Wasco-Shafter	Renfro Rd	Arterial	Kern County	65
WS2 - Wasco-Shafter	Kimberlina Ave	Arterial	Kern County	65
WS2 - Wasco-Shafter	Shafter Ave	Arterial	Kern County	55
WS2 - Wasco-Shafter	Beech Ave	Arterial	City of Shafter	55
WS2 - Wasco-Shafter	E Lerdo Hwy	Arterial	City of Shafter	60
WS2 - Wasco-Shafter	Cherry Ave	Arterial	City of Shafter	55
WS2 - Wasco-Shafter	7th Standard Rd	Arterial	Kern County	50
WS2 - Wasco-Shafter	Kratzmeyer Rd	Collector	City of Bakersfield	55
WS2 - Wasco-Shafter	Renfro Rd	Arterial	Kern County	65
B1 - Bakersfield	Rosedale Hwy	Arterial	Kern County	55
B2 - Bakersfield	Rosedale Hwy	Arterial	Kern County	55
B2 - Bakersfield	Coffee Road	Ramp	Kern County	50
B3 - Bakersfield	Rosedale Hwy	Arterial	Kern County	55
B3 - Bakersfield	Coffee Road	Ramp	Kern County	50

4.2 Structure Classification

A policy decision is pending as to whether new or existing structures not directly supporting HST service but having potential to affect HST service are considered Primary structures (TM 2.10.4). Further seismic design guidance will be provided by the Authority for these structure types once the policy decision has been finalized. Until then, roadway structures over high-speed tracks are classified as Primary, as their collapse would cause disruption to HST service. Highway or ancillary structures not directly impacting HST operations are classified as Secondary.

Primary Structures are further classified into Important - Structures designated by the Authority as important, or Ordinary - all other structures.

04/02/2014 - RFP No.: HSR 13-57

4.3 Standard Structure Types

The following standard concrete structures are used for roadway structures in the FB Section:

- Precast/Prestressed Girders (PC/PS).
- CIP box girder (RC and PS).
- CIP with precast drop-in girders (hybrid).
- Prestressed slabs (CIP/PS and PC/PS).

CIP structures are used regularly throughout the FB Section. Precast girders or precast drop-in girders are used over existing freight lines. The depth of the structural section is based on the depth-to-span ratio of the longest span for each structure. Depth-to-span ratios for vehicular bridges are per Caltrans Comparative Bridge Costs (see Section 2 Table 2.2-1, and References).

4.3.1 Precast/Prestressed Girders

Precast girders are used where a box girder bridge is difficult or even impossible to build (for example, in a situation where there is no room for falsework or under a tight schedule or limited road closure). Girders over 80 feet will require a permit to be hauled on state highways. For precast girder structures, the design intent is to limit spans to 140 feet or less (see Figure 4.3-1). Standard I, Bulb-Tee, or Wide Flange girders are left for specification during final design.

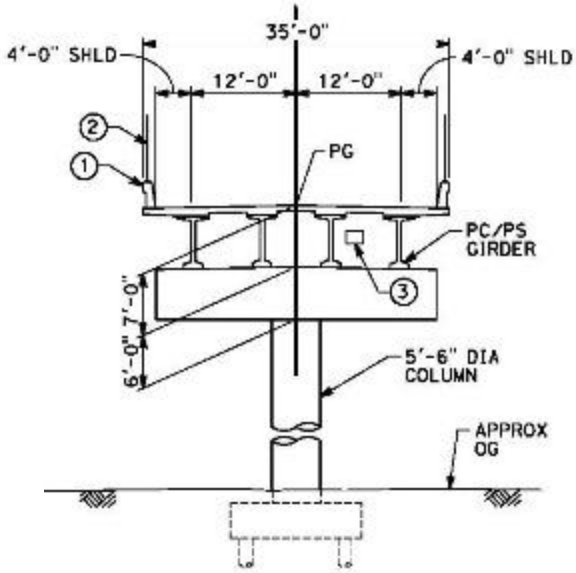

① Concrete barrier with AR fence
② AR fence with solid plate over HST
③ Future Utility Encasement Opening

Figure 4.3-1
Typical Section of Precast/Prestressed I-Girders

04/02/2014 - RFP No.: HSR 13-57

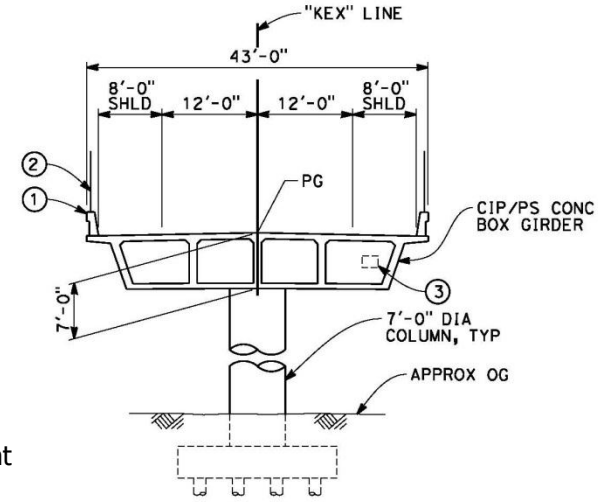

① Concrete barrier with AR fence
② AR fence with solid plate over HST
③ Future Utility Encasement Opening

Figure 4.3-2
Typical Section of CIP Post-Tensioned Box Girder

4.3.2 Cast-in-Place Post-Tensioned Box Girder

The CIP post-tensioned (and reinforced concrete) box girder is the most common Caltrans roadway structure. For a new structure crossing over an existing road, falsework openings are established to allow vehicular traffic to pass under the bridge during construction. CIP box girder structural section depth is the lowest of the various girder systems and has proved to be the most cost-effective structure for most situations. During construction, vertical and horizontal clearances may be reduced to allow room for falsework. Once the falsework is removed, the road will have the designed horizontal and vertical clearances. The bent cap is integral with the superstructure, giving a clean profile in contrast with the I-girder and other precast structures where the cap can be seen. The Caltrans standard for CIP/prestressed concrete box girders has sloping exterior fascia girders that improve the visual flow of the structure. (see Figure 4.3-2).

4.3.3 Cast-in-Place Box Girder with Precast Drop-in Span

The primary concern of the rail operators is to maintain rail traffic at all times. To accomplish this, CIP structures are strongly discouraged over the tracks. The hybrid system of CIP with precast drop-in girders is used to minimize the disruption of existing rail facilities during construction. A CIP box girder is used in all spans except over existing rail where precast girders are used. By combining the two bridge construction methods, an inexpensive alternative that does not affect existing rail line operations is provided. For the FB Section, this type of structure is used in several places where HSR is parallel to BNSF track. The length of the drop-in section is assumed to be 135 feet or less, but it is left to the design-build team to decide the best combination of precast and CIP elements. The hybrid CIP/prestressed, precast structure will require vertical exterior fascia girders to accommodate the continuous prestressing tendons used to create structural continuity (see Figure 4.3-3 and Figure 4.3-4).

04/02/2014 - RFP No.: HSR 13-57

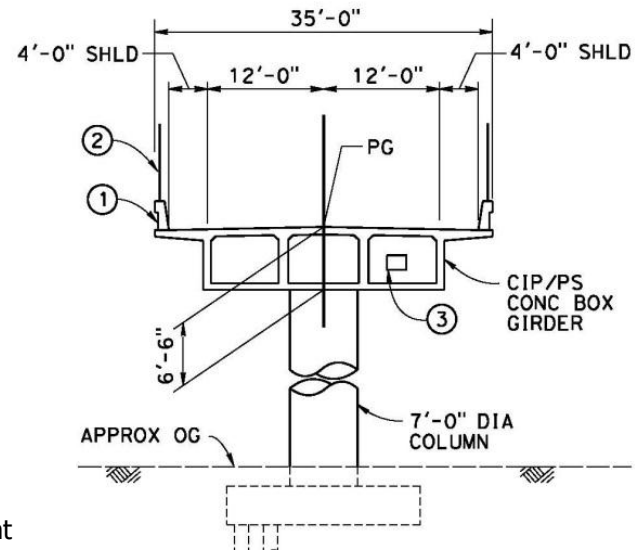

① Concrete barrier with AR fence
② AR fence with solid plate over HST
③ Future Utility Encasement Opening

Figure 4.3-3
Typical Section of CIP Box Girder with Vertical Stems

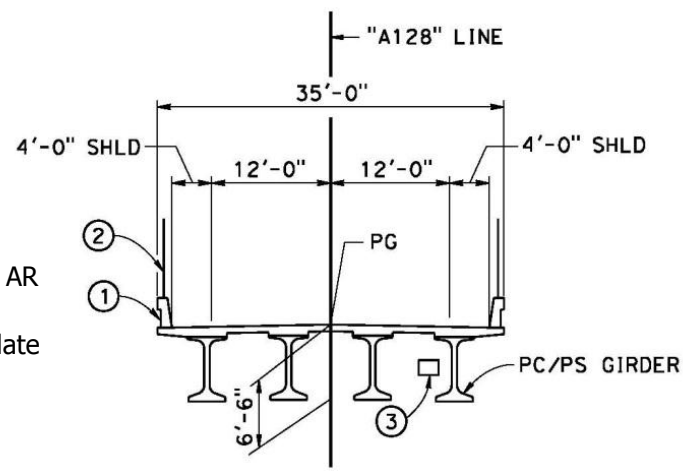

① Concrete barrier with AR fence
② AR fence with solid plate over HST
③ Future Utility Encasement Opening

Figure 4.3-4
Typical Section of Drop-in Span over BNSF

4.3.4 Prestressed Slabs

There are two types of slab bridge: CIP and precast voided slab. The slab structure sections have much smaller depths than their girder counterparts and are used when spans are less than 60 feet (see Figure 4.3-5). The voided precast slab is usually produced in 36- or 48-inch sections. The sections are grouted together and a thin overlay is placed to seal the unit together (see Figure 4.3-6). The CIP prestressed slab does not require an overlay but will require the same falsework opening as the CIP box girder.

04/02/2014 - RFP No.: HSR 13-57

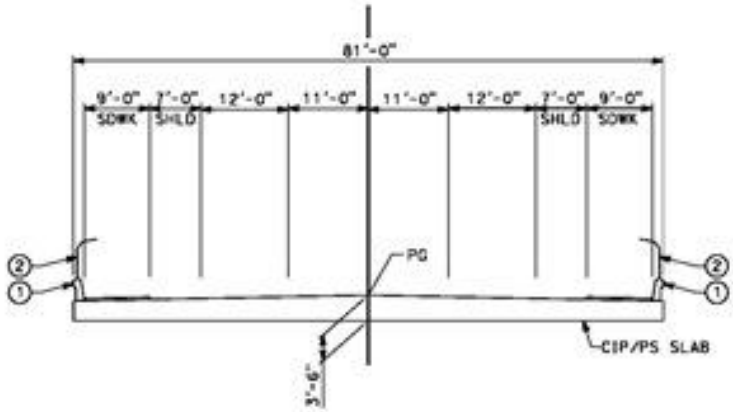

Figure 4.3-5
CIP Prestressed Slab

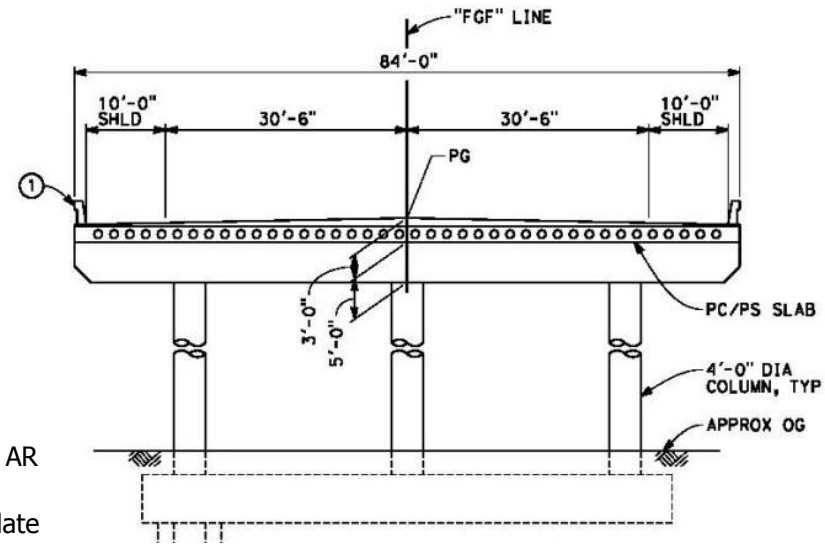

① Concrete barrier with AR fence
② AR fence with solid plate over HST

Figure 4.3-6
Precast Prestressed Voided Slab

4.4 Substructures/Foundation Types

4.4.1 General

The foundations of the roadway structures will be driven piles with a pile cap or single drilled shafts. To ensure plastic hinges will form in the columns, Caltrans Type 2 drilled shafts are assumed to be used. Driven piles are assumed to be 100-ton Caltrans standard plan piles. The driven piles will perform well with groundwater present and require no additional work for placement. Large-diameter shafts can be constructed in a drilled hole with groundwater present, but a tremie concrete pour method that will displace the water as the concrete is being placed will be needed. In addition, testing of the concrete is required after the concrete reaches strength. Pile caps are the default foundation for all structures unless a constraint exists to dictate the use of single, large diameter drilled shafts. Where substructures are adjacent to BNSF/UPRR, construction will follow the "Construction Notes" on Plan 71100, Sheet 3 of the BNSF/UPRR "Guidelines for Railroad Grade Separation Projects". See Section 4.6 tables for constraints to foundations. Pile caps under BNSF/UPRR right-of-way will be placed deep enough to allow normal use of the space above.

04/02/2014 - RFP No.: HSR 13-57

4.4.2 Abutments

Two types of abutments are used for the roadway structures. The most economic and most common is a short seat abutment. The abutment sits on piles at the top of the fill with wing walls to keep the soil supported under the travel way. The wing walls extend from the face of the abutment to 8 feet past the point where the abutment fill intersects roadway grade.

The second type of abutment is a tall version of the short seat abutment. Return walls are placed at the ends of the abutment footing perpendicular to the abutment layout line. The return walls stop at the back end of the abutment footing where there is a joint, and retaining walls start on their own foundations. The tall cantilever abutment and its retaining walls are independent of each other.

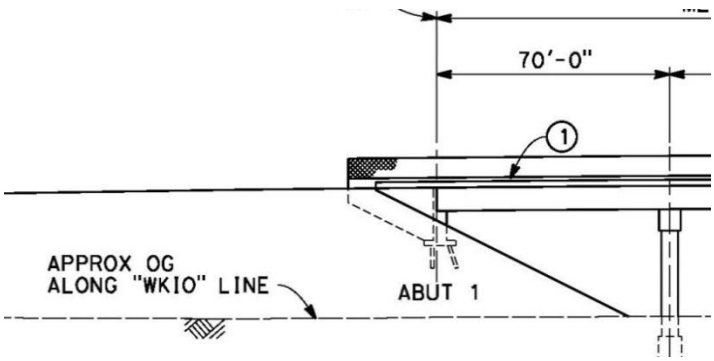

Figure 4.4-1
Short Seat Abutment

① Concrete barrier
④ Retaining wall

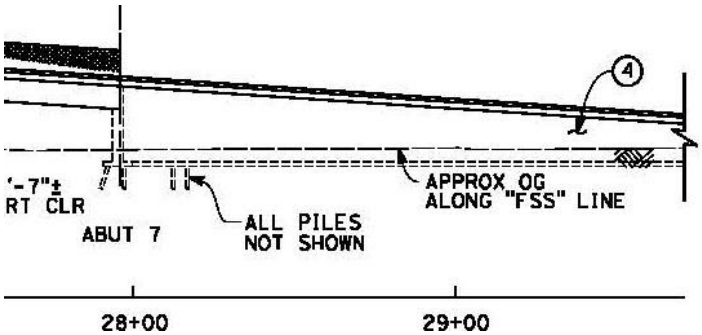

Figure 4.4-2
Tall Cantilever Abutment

04/02/2014 - RFP No.: HSR 13-57

4.4.3 Bents

Single-column and multi-column bents are utilized for the roadway structures. Single-column bents are preferred, although in some locations due to the width of the street and/or the skew of the bridge, two or more columns were used. A single-column bent will have a fixed condition at the top and bottom of the column, whereas in a multi-column bent, the columns are fixed at the top and pinned at the bottom. The pinned bottom of the column reduces the size of the footing and number of piles. For the multi-column bents, the column diameters are either 4 feet or 5′-6″. The single-column bents have either a 5′-6″ or 7-foot diameter, depending on span and width of deck. See Table 4.4-1 for the standardized Caltrans shapes utilized in the preliminary design plans.

Table 4.4-1
Standard Column Sizes

Section Width [feet]	Max Span Length [feet]			
	< 50	≤ 135	135 < s < 150	> 150
≤ 35*	NA	(1) 5′-6″	(1) 7′-0″	(1) 8′-3″ x 5′-6″
35 < w ≤ 59 **	NA	(2) 5′-6″	(2) 5′-6″	(2) 5′-6″
> 60	(3) 4′-0″	(3+) 5′-6″	(3+) 5′-6″	(3+) 5′-6″

*() identifies number of columns in bent; *for skews > 20^0 strong consideration for 2 column bents unless considerably constrained location; **highly constrained locations may use (1) 8′-3″ x 5′-6″.*

See Figure 4.4-3 for a typical section for a single-column bent.

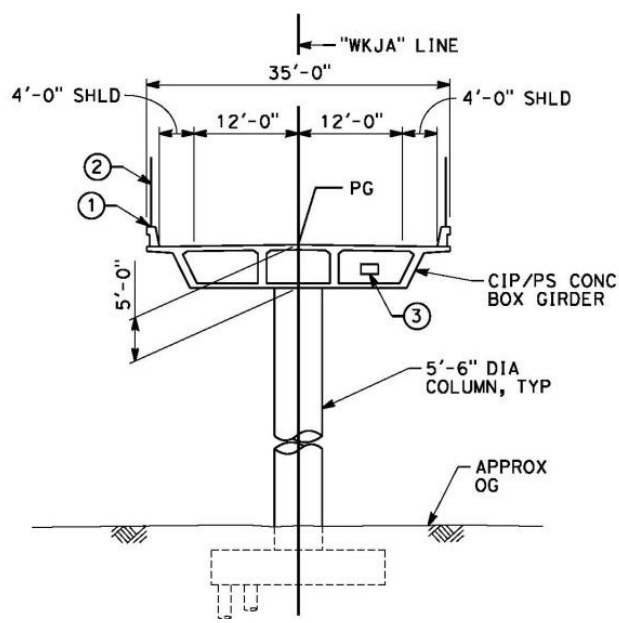

① Concrete barrier with AR fence
② AR fence with solid plate over HST
③ Future Utility Encasement Opening

Figure 4.4-3
Typical Bent Section with Single Column

04/02/2014 - RFP No.: HSR 13-57

Some of the roadway alignments are wide and carry significant traffic volumes. The conceptual layout for such crossings allows for staged construction by using an extra column. For example, on Alignment HW, the SR58 crossing has four columns. This would allow the crossing to be built in stages to allow maintenance of traffic. Figure 4.4-4 shows a typical section at SR58.

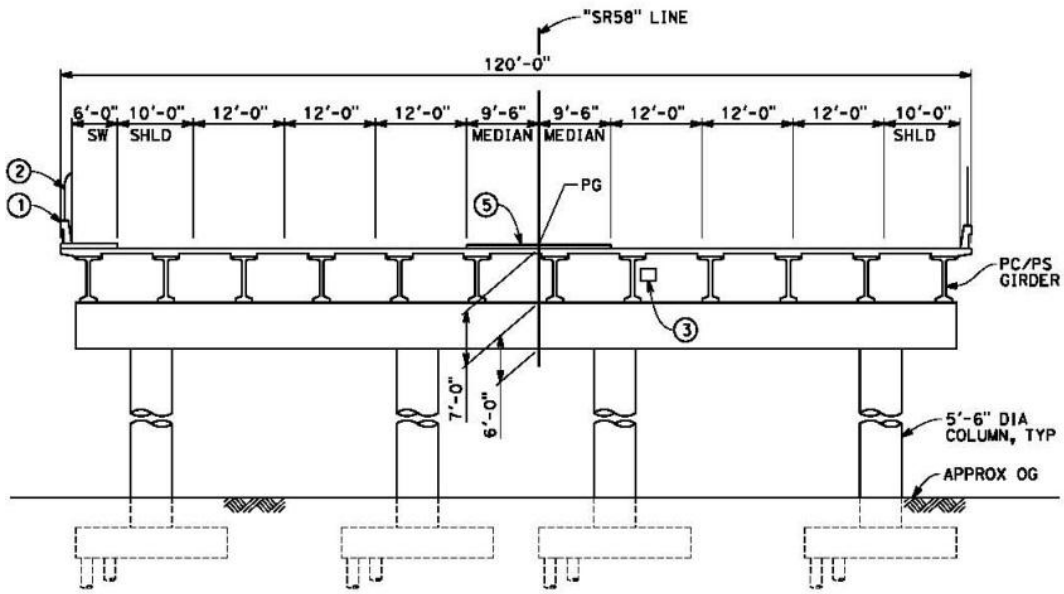

① Concrete barrier with AR fence
② AR fence with solid plate over HST
③ Future Utility Encasement Opening
⑤ Raised Median

Figure 4.4-4
Typical Bent Section with Multiple Columns

4.4.4 Special Design: 7th Standard Road

The overcrossing at 7th Standard Road is a special case with a unique design. Kern County recently completed the construction of the 7th Standard Road Overcrossing. This 411-foot-long by 105-foot-wide structure does not provide sufficient clearance for the alternative WS1 and WS2 Alignments. WS1 (HST at-grade) requires additional vertical clearance under the roadway structure. The proposed solution for WS1 is to demolish the existing structure and build a higher overcrossing using large-diameter drilled shafts for foundations.

The WS2 Alignment provides the minimum vertical clearance (16′-6″) above 7th Standard Road but needs a longer end span for the realigned Santa Fe Way. Listed below are several options that were considered to provide additional space for the future expansion of Santa Fe Way under 7th Standard. Construction operations in these options be done under traffic with one half of the road constructed at a time. See Figure 4.4-5.

04/02/2014 - RFP No.: HSR 13-57

1. Tunnel through the embankment behind abutment 1. The tunnel would have to be sufficiently far behind abutment 1 so as not to interfere with the piled foundations of the abutment. This option was not progressed because it would require additional property taking and an enlargement of the footprint.

2. Remove the existing end span and abutment 1, and construct a new abutment 1 and a longer end span. Although the bridge was constructed using precast girders, continuity prestress tendons were installed to make the structure continuous from end to end. There appears to be no way to re-anchor prestress tendons that have been severed and so not only would the negative moment over bent 2 be lost, but also the prestress positive moment in span 2. If it were possible to re-anchor the prestress tendons in span 2, it might be possible to employ new external prestress tendons to restore the negative moment over bent 2 and the positive moment along span 2. This option was considered impracticable and was not progressed.

3. Re-build superstructure on existing bents. This would entail removing the superstructure and exposing reinforcement at the tops of the columns. Extra space for Santa Fe Way would be made by demolishing abutment 1 and building a longer end span. Examination of the construction plans for the present 7th Standard Overcrossing shows the beams are made integral with the bent caps with heavy reinforcement. Although theoretically possible, specifying this method raises risk for the project if the construction contractor finds that it is impracticable to remove concrete in the heavily reinforced sections in the bent caps. Therefore, this method was not progressed.

4. Re-build the bridge on existing foundations. The columns are pinned at their bases and so removal of concrete and rebar in the columns would be relatively simple. This is the preferred option and would have the following steps: remove superstructure and columns; salvage and re-use the existing foundations; build new abutment 1; build new columns and superstructure.

04/02/2014 - RFP No.: HSR 13-57

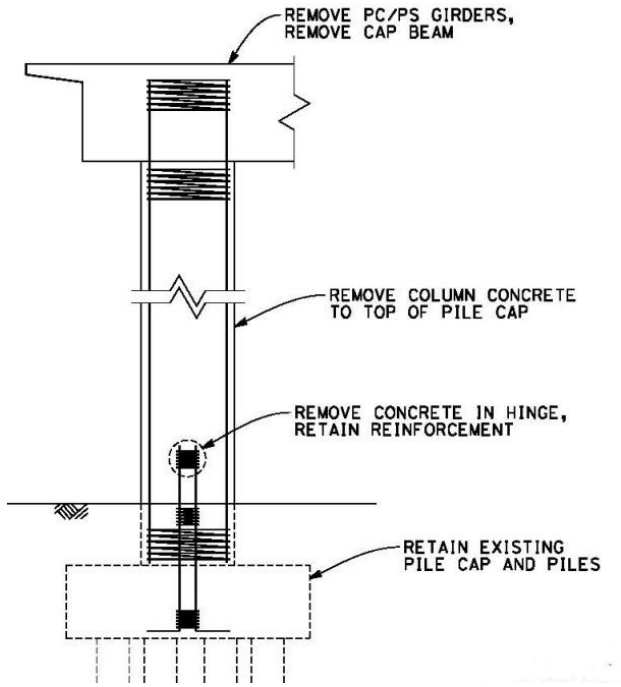

Figure 4.4-5
Typical Section through Salvage Pile Cap

4.5 Key Design and Site Constraints

The basis of design for these structures is Caltrans standard practice in conjunction with the Bridge Design Specifications. General assumptions are discussed in Section 2.0. All roadway structures will have a 36-inch-high vehicular barrier and pedestrian fencing. For structures over HSR, the access restriction (AR) fence will have a solid section, extending 25 feet to either side of the HST tracks. Per Caltrans standards, roadway structures with sidewalks will have fencing curved at the top. The design assumptions for the roadway structures will follow Caltrans procedures for structural adequacy, seismic performance as specified by TMs, constructability, BNSF/UPRR standards, and assumed construction methods.

4.5.1 Construction Staging and Traffic

Construction Staging and traffic will need to be coordinated with local agencies during final design. Many of the crossings are at green-field locations where traffic can be maintained on the existing road during construction. As described in Section 4.3.3, some structures have an additional column where it is clear that staged construction will be needed. The following locations require demolishing existing or portions of an existing bridge before building a new overcrossing. All demolition within freight right-of-way shall additionally comply with railroad requirements.

Table 4.5-1
Bridge Demolition

Alignment	Overcrossing
F1	Stanislaus St
WS1/WS2	7th Standard
B1/B2/B3	SR58

04/02/2014 - RFP No.: HSR 13-57

4.5.2 Utilities

For general discussion on project utilities, see Section 2.1.2. Where known, the location and need for relocation of utilities are provided on the preliminary drawings, and also provided in Section 4.6. Future utility openings are provided along the length of bridge, inside box girders or encased along precast girders

4.5.3 Hydraulics and Drainage

Deck cross slopes are proposed at 2% on either side of the crown with drainage on both sides of the structure. For roadway crossings on curves, the deck is super elevated and drainage will be provided on the low side. Relocation of existing canals are identified on the preliminary drawings, and are identified in Section 4.6 tables if constraining the structure layout.

4.5.4 Hazardous Material

At this preliminary design stage, no known hazardous materials are present.

4.5.5 Seismic Criteria

Roadway structures over HSR tracks will be designed to meet CHSTP seismic performance criteria for the MCE and OBE events. For further discussion on HST seismic design criteria refer to Section 2.6. All secondary structures will meet Caltrans Seismic Design Criteria.

4.5.6 Cost Estimate

The roadway structures are classified as Standard per Caltrans requirements. However, based on prototypical unit costs provided by PMT and green-field construction they can be considered nonstandard, therefore require price adjustments. Demolition of existing structures will require additional cost items. See Table 4.5-1 for list of structures to be demolished. See Section 2.7 for further discussion and reference.

4.5.7 Site Constraints

This section of the HST route is across a wide and relatively flat valley. Major constraints are maintaining local access, providing safety for motorists and HST operations, and minimizing intrusion into adjacent right-of-way. Clearances are included in the Record Set 15% roadway structures plans, and clearance requirements are discussed in Section 2.4. Common constraints have been identified and include HST rail and facilities, freight rail, local and major roads, and canals. The following structure types were standardized based on the freight constraints that dictate construction methods.

Table 4.5-2
Standard Structure Types

	Maximum Span Length [feet]		
Constraints	**< 125**	**125 < s ≤ 140**	**> 140**
No freight	CIP or PC/PS	CIP or PC/PS girders	CIP
Freight	PC/PS	PC/PS	CIP w/ drop-in PC/PS

04/02/2014 - RFP No.: HSR 13-57

To further identify and understand layout constraints, the roadway structures can be further grouped into the following subcategories:

1. Crossing HST Only

   A total of 52 roadway structures are constrained only by HST. All roadway fills are located outside HST right-of-way. The crossings were laid out to avoid placing columns in the HST right-of-way where economically feasible. See Section 2.4 for further discussion on required clearances. Typical examples of HST only structures can be seen on Alignment H at Dover, Excelsior, Elder and Flint when the structures clear span HST R/W. In the case of high skews, long spans clear over the right-of-way would be too costly, and therefore columns were placed to avoid impacting HST facilities (tracks, OCS, drainage, cable troughs, access roads). An example can be seen on Alignment K3 at Kent where the span over HST has been reduced by placing one column in HST R/W. Additionally, in cut sections, HST access roads are placed at the top of the cut section. Roadway structures on HW2 Alignment deal with high skews and cross HST in cut sections. This increases the HST right-of-way substantially and clear spanning the HST right-of way is not feasible at these locations. Therefore, columns are placed within HSR R/W, but avoid OCS and other HSR facilities. A notable example occurs on HW2 at 13th Avenue. Even with a main span exceeding 200 feet, columns are placed 16 feet from centerline of station tracks. Moving these columns just a few feet perpendicular to the tracks has large impacts on bridge spans with a more expensive nonstandard structure type. The 13th Avenue columns will have pier protection, and do not impact HSR drainage facilities. A list of these structures and further constraints can be found in Table 4.6-1.

2. Crossing HST and Freight

   A total of 18 roadway structures (and 1 pedestrian structure in Fresno) are constrained by HST and freight rail right-of-way. Roadway fill slopes are located outside both right-of-ways. Two-thirds of these locations have coincident HST/RR right-of-way and clear spanning both right-of-ways would not be feasible. Therefore columns were placed initially to avoid impacting HST facilities, and then placed to minimize impacts to BNSF facilities (maintaining 25 feet clear from centerline of BNSF tracks). An example can be seen on Alignment M at E. Adams Avenue where the right-of-way lines are coincident. The layout places bent 2 outside HST R/W but to clear span the BNSF R/W would require a span of over 250 feet. The adopted layout brings bent 3 into HST R/W but exceeds both the minimum clearance to HST track and to HST R/W. At locations with single BNSF tracks, clearances allow for future track expansion. At locations with gaps between right-of ways, layouts clear span right-of-way by placing columns in the gap. Locations with high skew or right-of-way width greater than standard do not provide economical options for clear spanning. A list of these structures and any further constraints can be found Table 4.6-2.

3. Crossing HST, Freight, and Road

   A total of 32 roadway structures are constrained by HST, freight and roads. All roadway fill slopes are located outside right-of-ways. In these locations, further consideration was taken into account and was discussed in Section 2.4.2, 2.4.3 and 2.4.5.

04/02/2014 - RFP No.: HSR 13-57

For local roads, columns placed within 10 feet of the traveled way (or 2'-6" from edge of shoulder) received pier protection per Caltrans Highway Design Manual. For State Facilities, such as SR43, future expansions or improvements were considered, per Section 2.4.5. An example can be found on Alignment K2 at Nevada Avenue. Here, columns are outside the BNSF R/W while maintaining acceptable clear distances from HST R/W for both bent 2 and 3. At SR43, bent 5 is within the 30-foot clear recovery zone and has pier protection. Roadway fill was placed outside the 30-foot clear recovery zone (CRZ), and also allowed for the Ultimate Traveled Capacity (UTC) on that section of road. Columns were placed to permit future expansion of these expressways. A list of these structures and any further constraints can be found in Table 4.6-3.

4. Crossing HST or Freight and Road

   A total 3 roadway structures are constrained by HST and roads. The same considerations as the above were considered. Columns are placed in this order: avoid HST right-of-way, avoid HST facilities maintaining clearance requirements, permit future roadway expansion, avoid columns and have no fill in CRZ, and then protect columns in the CRZ. A list of these structures and any further constraints can be found in Table 4.6-4.

5. Crossing Road or Canals Only

   A total of 7 roadway structures are constrained by canals or roads. For canal/levee clearances, see Section 2.4.6. The B2/B3 Westside Parkway/Coffee Road Off Ramps cross the Friant-Kern Canal and provide access to maintenance roads on both sides of canal. Due to depressed roads crossing under HST tracks in Fresno, adjacent intersections must be accommodated with grade separations along G St (frontage Street along F1 alignment). Therefore Fresno St and Tulare St are CIP or Precast slab structures with total bridge span lengths less than 60 ft. These undercrossings providing access for pedestrians were required by local agencies. East Ave on F1, provides access for local properties located between UPRR and BNSF to Church Ave and conforms to the structure elevation. Ave 148 on C3, provides a new overcrossing of the realigned SR43. A list of these secondary structures and any further constraints can be found in Table 4.6-5.

04/02/2014 - RFP No.: HSR 13-57

4.6 Roadway Structure Key Data and Constraints

Table 4.6-1
Constraints: HST Only

	Alignment	Structure	Structure Type	Max Span (ft)	# of Bents in HST R/W	Other Constraints
1	H	S Clovis Ave	CIP	130	0	• S. Clovis realigned to connect offset sections
2	H	E Elkhorn Ave	CIP	128	2	• Crosses HST on high skew > 45°
3	H	S Fowler Ave	CIP	130	0	• S. Fowler realigned to connect offset sections
4	H	E Davis Ave	CIP	154	2	• Crosses HST on high skew > 60°
5	H	Dover Ave	CIP	145	0	• Crosses HST on skew > 20°
6	H	Excelsior Ave	CIP	140	0	• Excelsior realigned to provide better access to adjacent properties • Skew ~12°
7	H	Elder Ave	CIP	135	0	• Elder realigned to provide better access to adjacent properties
8	H	Flint Ave	CIP	134	0	• Flint realigned to provide better access to adjacent properties
9	H	Hanford Armona Rd	CIP	130	0	• Bridge lengthened to avoid culvert
10	H	Houston Ave	CIP	110	0	• Bridge lengthened and retaining wall used to protect adjacent NW property • Culvert between bents 4 and 5
11	H	Iona Ave	CIP	130	0	• Culvert replacing existing canal near abutment 1
12	HW	Excelsior Ave	PC/PS	130	0	• Excelsior realigned to provide better access to adjacent properties
13	HW	Flint Ave	PC/PS	130	0	

04/02/2014 - RFP No.: HSR 13-57

	Alignment	Structure	Structure Type	Max Span (ft)	# of Bents in HST R/W	Other Constraints
14	HW	Fargo Ave	CIP	140	0	• Canal realigned
15	HW	Glendale Ave	PC/PS	122	2	• Station tracks e • Expanded HST R/W
16	HW	State Route 198	PC/PS	123	2	• Station tracks • Expanded HST R/W
17	HW	Hanford Armona Rd	PC/PS	110	2	• Expanded HST R/W (end of station tracks) • Skew ~12°
18	HW	Houston Ave	PC/PS	130	0	• Skew ~12°
19	HW	Iona Ave	PC/PS	130	0	• Skew ~12°
20	HW2	Excelsior Ave	PC/PS	130	0	• Excelsior realigned to provide better access to adjacent properties
21	HW2	Flint Ave	PC/PS	130	0	
22	HW2	Fargo Ave	PC/PS	140	0	
23	HW2	W Lacey Blvd	PC/PS	110	2	• HST in Cut Section, columns outside drainage, access roads at top of cut • Retaining walls used to eliminate fill in access road, and allow for HST Storage Track cut section expansion • Expanded HST R/W • Canal realigned
24	HW2	13th Ave	CIP	206	2	• Crosses HST on skew > 50° • HST in cut section, access roads at top of cut, columns are outside channel at bottom of cut

04/02/2014 - RFP No.: HSR 13-57

	Alignment	Structure	Structure Type	Max Span (ft)	# of Bents in HST R/W	Other Constraints
						• Station and Storage tracks, expanded HST R/W • Pier protection required for columns within 15 foot clearance to track centerline
25	HW2	Glendale Ave	CIP	176	2	• HST in cut section, columns are at bottom of cut and are outside drainage channel. • Station and Storage tracks, expanded HST R/W • Road alignment is curved, deck is superelevated, superelevation accounted for in vertical clearance
26	HW2	State Route 198	CIP	175	2	• HST in cut section, columns outside drainage channel. • Station and Storage tracks, expanded HST R/W • Four columns allow staged construction for maintaining traffic on SR 198
27	HW2	Hanford Armona Rd	PC/PS	110	0	• HST in cut section, columns are in the slope but outside drainage channel. Retaining walls used to support fill adjacent to access road • Station tracks, expanded HST R/W • Skew ~15°
28	HW2	Houston Ave	PC/PS	130	0	• Skew ~14°
29	K1	Jackson Ave	PC/PS	120	1	• Crosses HST on skew > 20°
30	K2	Jackson Ave	CIP	130	0	• Crosses HST on skew Skew ~13°
31	K3	Idaho Ave	PC/PS	140	0	• Canal realigned to avoid structure fill
32	K3	Jackson Ave	PC/PS	134	1	• Expanded HST R/W • Skew ~10°

04/02/2014 - RFP No.: HSR 13-57

	Alignment	Structure	Structure Type	Max Span (ft)	# of Bents in HST R/W	Other Constraints
33	K3	Kent Ave	PC/PS	130	1	• Crosses HST on ~24° skew and curve • Realigned and retaining Wall used to avoid impacts to adjacent property • Curved alignment, vertical clearance accounted for superelevation
34	K3	Kansas Ave	PC/PS	140	0	• Realigned to avoid impact to adjacent property
35	K4	Idaho Ave	PC/PS	140	0	• Canal realigned to avoid structure fill
36	K4	Jackson Ave	PC/PS	140	0	• Canal realigned to avoid structure fill
37	K4	Kent Ave	CIP	150	0	• Realignment and retaining Wall used to provide access to adjacent property • Curved alignment, superelevation accounted for in vertical clearance
38	K4	Kansas Ave	CIP	150	0	• Realigned to provide access to adjacent property
39	K5	Iona Ave	CIP	140	0	• Skew ~15°
40	K5	Jackson Ave	CIP	150	0	• Crosses HST on skew >20º
41	K6	Iona Ave	PC/PS	140	1	• Expanded HST R/W • Skew ~15°
42	K6	Jackson Ave	PC/PS	140	0	• Skew ~16°
43	A1	County Rd J22	PC/PS	140	0	• Skew ~11°
44	A1	Garces Hwy	PC/PS	140	0	• Crosses HST on skew >20°
45	A1	Peterson Rd	CIP	150	0	• Crosses HST on skew >20º
46	L2	State Route 46	CIP	140	0	• Crosses HST on skew >20º

04/02/2014 - RFP No.: HSR 13-57

	Alignment	Structure	Structure Type	Max Span (ft)	# of Bents in HST R/W	Other Constraints
47	L4	State Route 46	CIP	144	0	• Crosses HST on skew >20º
48	WS2	Kimberlina Ave	CIP	145	0	• Crosses HST on skew > ~30°
49	WS2	Shafter Ave	CIP	144	2	• Crosses HST on skew >50º • Retaining wall reduces over-all length
50	WS2	Beech Ave	CIP	144	2	• Crosses HST on skew ~60°
51	WS2	East Lerdo Hwy	CIP	122	1	• Crosses HST on skew >30º
52	WS2	Cherry Ave	CIP	145	2	• Crosses HST on skew ~60°

04/02/2014 - RFP No.: HSR 13-57

Table 4.6-2
Constraints: HST and Freight

	Alignment	Structure	Structure Type	Max Span (ft)	# of Bents in HST R/W	HST/BNSF R/W	# of Bents in BNSF/UPRR R/W	Other Constraints
1	F1	E Central Ave	PC/PS	140	0	Gap	0	• Retaining Walls used to avoid impacts to canal. Retained fill extends through front slope to avoid additional spans, as it is too tall for cantilevered abutment. • Drilled shafts used to reduce impacts to adjacent canals during construction
2	F1	E American Ave	PC/PS	130	2	Coincident	0	• HST MOI Facility (includes HST siding track and access road) • Expanded HST R/W
3	F1	Stanislaus Ped Bridge	PC/PS	150	0	Gap	0	• Similar constraints as Stanislaus roadway structure • Must conform to Stanislaus roadway structure elevation • Must maintain span arrangement as Stanislaus roadway structure • Tie in to G St and H St
4	M	E Lincoln Ave	PC/PS	130	2	Coincident	0	• HST MOI Facility (includes HST siding track and access road), • Expanded HST R/W
5	M	E Adams Ave	PC/PS	130	1	Coincident	0	
6	M	E South Ave	PC/PS	130	1	Coincident	0	• BNSF Realigned

04/02/2014 - RFP No.: HSR 13-57

	Alignment	Structure	Structure Type	Max Span (ft)	# of Bents in HST R/W	HST/BNSF R/W	# of Bents in BNSF/UPRR R/W	Other Constraints
7	M	E Floral Ave	PC/PS	135	1	Coincident	0	
8	M	E Nebraska Ave	PC/PS	130	1	Coincident	0	• Retaining wall to avoid impacts to adjacent property (winery), extended through front slope (too tall for cantilever abutment). • BNSF tracks realigned • Curved alignment, superelevation accounted for in vertical clearance
9	M	E Mountain View Ave	PC/PS	130	1	Coincident	0	• BNSF tracks realigned
10	HW	E Elkhorn Ave	PC/PS	135	1	Coincident	1	• Crosses HST on skew ~20° • Clearances allow for future Bent 3 location same as April 2013 submittal in BNSF R/W (25+ft clear from CL BNSF track)
11	HW2	E Elkhorn Ave	PC/PS	133	1	Coincident	1	• Crosses HST on skew ~20° • Clearances allow for future Bent 3 location same as April 2013 submittal in BNSF R/W (26+ft clear from CL BNSF track)
12	K1	Lansing Ave	CIP + PC/PS	162	1	Coincident	1	• Crosses HST on Skew >30° • Bent 2 location moved from April 2013 submittal in BNSF R/W (25ft clear right) to coincident R/W (45ft clear left) • Clearances allow for future BNSF track

04/02/2014 - RFP No.: HSR 13-57

	Alignment	Structure	Structure Type	Max Span (ft)	# of Bents in HST R/W	HST/BNSF R/W	# of Bents in BNSF/UPRR R/W	Other Constraints
13	K2	Lansing Ave	CIP + PC/PS	123	1	Gap	0	• Crosses HST on Skew >30° • Clearances allow for future BNSF track
14	K5	Lansing Ave	CIP + PC/PS	150	1	Coincident	0	• Crosses HST on skew >30° • Retaining wall to avoid adjacent properties
15	K6	Lansing Ave	PC/PS	140	1	Gap	0	• Crosses HST on skew >30° • Columns placed clear of BNSF R/W
16	C3	Ave 148 West	CIP + PC/PS	164	1	Gap	0	• Existing SR43 realigned, HST does not cross SR43 at this overcrossing • Clearances allow for future BNSF track
17	B1	Rosedale Hwy	CIP + PC/PS	157	2	Coincident	1	• Retaining wall to avoid properties • Crosses HST on skew ~48° • BNSF Realigned • Clearances allow for future BNSF track
18	B2	Rosedale Hwy	CIP + PC/PS	150	2	Coincident	1	• Retaining walls to avoid properties , • Crosses HST on skew ~48° • BNSF Realigned • Clearances allow for future BNSF track
19	B3	Rosedale Hwy	CIP + PC/PS	150	2	Coincident	1	• Retaining wall to avoid properties • Crosses HST on skew > 40°

04/02/2014 - RFP No.: HSR 13-57

	Alignment	Structure	Structure Type	Max Span (ft)	# of Bents in HST R/W	HST/BNSF R/W	# of Bents in BNSF/UPRR R/W	Other Constraints
								• BNSF Realigned • Clearances allow for future BNSF track

04/02/2014 - RFP No.: HSR 13-57

Table 4.6-3
Constraints: HST, Freight and Roads

	Alignment	Structure	Structure Type	Max Span (ft)	# of Bents in HST R/W	HST/BNSF R/W	# of Bents in BNSF/ UPRR R/W	Roadway Crossings	Other Constraints
1	F1	Stanislaus St	PC/PS	159	0	Gap	0-UPRR	G Street, H Street	• Highly constrained urban location, precast section selected to minimize construction impacts • Retaining wall and cantilever abutments used to reduce bridge length and impacts on adjacent properties/buildings. • Steep grades require separate pedestrian structure
2	F1	E Church Ave	CIP + PC/PS	171.8	1	Coincident	0 – UPRR 0 - BNSF	Sunland Ave, BNSF Spur	• Retaining Wall and cantilever abutments used to reduce bridge lengths and impacts to adjacent properties, buildings, Sunland Ave and BNSF spur. • West approach grades require pedestrian ramp on separate retained fill to meet ADA requirements. • Drilled Shafts used due to temporary clearances required near tracks. • High Skews and expanded HST R/W dictate column, clearances to maintain access roads and drainage facilities.

04/02/2014 - RFP No.: HSR 13-57

	Alignment	Structure	Structure Type	Max Span (ft)	# of Bents in HST R/W	HST/BNSF R/W	# of Bents in BNSF/ UPRR R/W	Roadway Crossings	Other Constraints
3	M	E Manning Ave	CIP + PC/PS	165	1	Coincident	0	Chance Ave (2 lanes), Private Access Cul-de-Sac	• Single column utilized on first three bents to avoid impacts to private access road under bridge. • Retaining Wall and cantilever abutment used to reduce bridge lengths and impacts to adjacent properties/buildings. • Realigned BNSF. Columns are outside BNSF R/W
4	K1	Kansas Ave	CIP + PC/PS	150	1	Gap	0	10th Ave (2 lanes)	• Retaining walls used to avoid adjacent properties and extended to front slope (too tall for cantilever abutment) • Kansas realigned to provide better access to 10th Ave • Bent 8 placed to avoid impact to culvert
5	K2	Nevada Ave	CIP + PC/PS	123	2	Coincident	0	SR43 (expressway 4 lane UTC)	• MBGR to protect columns in CRZ • Nevada realigned to provide better access to SR43 •
6	K3	Nevada Ave	PC/PS	140	1	Gap	0	SR43 (expressway 4 lane UTC)	• MBGR to protect columns in CRZ • Nevada realigned to provide better access to SR43

04/02/2014 - RFP No.: HSR 13-57

	Alignment	Structure	Structure Type	Max Span (ft)	# of Bents in HST R/W	HST/BNSF R/W	# of Bents in BNSF/ UPRR R/W	Roadway Crossings	Other Constraints
7	K5	Kansas Ave	CIP + PC/PS	155	1	Coincident	0	10th Ave (2 lanes)	• Retaining wall to avoid adjacent properties • Bent 8 placed to avoid conflict with culvert
8	K6	Nevada Ave	PC/PS	140	1	Gap	0	SR43 (expressway 4 lane UTC)	• Retaining Wall to avoid impact to adjacent property • Culvert located under approach fill • MBGR to protect columns inside CRZ • Nevada realigned to provide better access to SR43

04/02/2014 - RFP No.: HSR 13-57

	Alignment	Structure	Structure Type	Max Span (ft)	# of Bents in HST R/W	HST/BNSF R/W	# of Bents in BNSF/ UPRR R/W	Roadway Crossings	Other Constraints
9	C1	Nevada Ave	PC/PS	131	1	Gap	0	SR43 (expressway 4 lane UTC)	• Canal realigned, no longer impact to structure • Drilled shafts used to avoid impacts to existing canal during construction • MBGR to protect columns in CRZ • Retaining walls used to avoid impact to adjacent canal, extended through front slope (too tall for cantilever abutment). • Clearances allow for future BNSF track • Crosses HST on skew ~30°
10	C1	Ave 144	PC/PS	135	1	Coincident	0	SR43 (conventional hwy, 2 lane UTC),	• Ave 144 realigned to provide better access to SR43 • Abutment extended to avoid impacts to culvert. • Overhead electric to be relocated.

04/02/2014 - RFP No.: HSR 13-57

	Alignment	Structure	Structure Type	Max Span (ft)	# of Bents in HST R/W	HST/BNSF R/W	# of Bents in BNSF/ UPRR R/W	Roadway Crossings	Other Constraints
11	C2	Nevada Ave	CIP + PC/PS	149	1	Gap	0	SR43 (expressway 4 lane UTC)	• Canal Realigned, no longer impact to structure. • Drilled shafts used to avoid impacts to existing canal during construction. • MBGR to protect columns in CRZ. • Retaining walls used to avoid impact to adjacent canal, extended through front slope (too tall for cantilever abutment).
12	C3	Charles St	CIP + PC/PS	128	1	Coincident	1	Realigned Otis & Santa Fe Ave	• Retaining walls to eliminate toe of fill in adjacent roadway • Crosses HST on skew > 30°
13	P	Ave 128	CIP + PC/PS	142	1	Coincident	0	SR43 (conventional hwy, 2 lane UTC),	• MBGR to protect columns in CRZ.
14	P	Hesse Ave	CIP + PC/PS	130	1	Coincident	0	SR43 (conventional hwy, 2 lane UTC),	• Bent 4 avoids culvert with shaft foundation, and retaining walls to maintain access to parallel maint. Road.

04/02/2014 - RFP No.: HSR 13-57

	Alignment	Structure	Structure Type	Max Span (ft)	# of Bents in HST R/W	HST/BNSF R/W	# of Bents in BNSF/ UPRR R/W	Roadway Crossings	Other Constraints
15	P	Ave 112	CIP + PC/PS	120	1	Coincident	0	SR43 (conventional hwy, 2 lane UTC),	• MBGR to protect columns in CRZ
16	P	Ave 88	CIP + PC/PS	124	1	Coincident	0	SR43 (conventional hwy, 2 lane UTC)	• Crosses HST at skew >30° • Clearances allow for future BNSF track
17	A2	County Rd J22	PC/PS	125	1	Coincident	0	SR43 (conventional hwy, 2 lane UTC), & Ramp,(1 lane)	• J22 realigned to provide better connection to SR43MBGR to protect columns in CRZ.
18	A2	Ave 24	PC/PS	130	1	Coincident	0	SR43 (conventional hwy, 2 lane UTC)	• Ave 24 realigned to provide better connection to SR43MBGR to protect columns in CRZ
19	A2	Garces Hwy	PC/PS	140	1	Coincident	2	SR43 (conventional hwy, 2 lane UTC)	• Garces Hwy realigned to provide better connection to SR43 • Large BNSF R/W • MBGR to protect columns in CRZ

04/02/2014 - RFP No.: HSR 13-57

	Alignment	Structure	Structure Type	Max Span (ft)	# of Bents in HST R/W	HST/BNSF R/W	# of Bents in BNSF/ UPRR R/W	Roadway Crossings	Other Constraints
20	A2	Schuster Rd	PC/PS	130	1	Gap	0	SR43 (conventional hwy, 2 lane UTC)	• Schuster realigned to provide better connection to SR43 • MBGR to protect columns in CRZ
21	A2	Peterson Rd	PC/PS	140	0	Gap	0	SR43 (conventional hwy, 2 lane UTC)	• Peterson realigned to provide better connection to SR43MBGR to protect columns in CRZ
22	WS1	Mccombs Ave	PC/PS	125	1	Coincident	0	SR43 (conventional hwy, 2 lane UTC)	• Realigned to provide better access to adjacent property • MBGR to protect columns in CRZ
23	WS1	Merced Ave	CIP + PC/PS	175	2	Coincident	0	SR43 (expressway, 4 lane divided UTC)	• Realigned to provide better local access • Crosses HST on skew • MBGR to protect columns in CRZ • Retaining Wall to keep toe of fill out of HST R/W and minimize bridge length and eliminate additional span

04/02/2014 - RFP No.: HSR 13-57

	Alignment	Structure	Structure Type	Max Span (ft)	# of Bents in HST R/W	HST/BNSF R/W	# of Bents in BNSF/ UPRR R/W	Roadway Crossings	Other Constraints
24	WS1	Poplar Ave	CIP + PC/PS	170	2	Coincident	0	SR43 (expressway, 4 lane divided UTC)	• Crosses HST on skew > 40° • MBGR to protect columns in CRZ • Retaining Wall to keep toe of fill out of HST R/W and minimize bridge length and eliminate additional span
25	WS1	Fresno Ave	CIP + PC/PS	155	1	Coincident	1	SR43 (expressway, 4 lane divided UTC)	• Clearances allow for future BNSF tracks • MBGR to protect columns in CRZ • Realigned on a curve to avoid adjacent development in NW quadrant • Super elevation accounted for in vertical clearance
26	WS1	Burbank St	CIP + PC/PS	165	0	Gap	0	Realigned SFW1, clearance allows for future widening	• Crosses HST on skew > 30° • Realigned to avoid adjacent development in NW quadrant • MBGR to protect columns in CRZ

04/02/2014 - RFP No.: HSR 13-57

	Alignment	Structure	Structure Type	Max Span (ft)	# of Bents in HST R/W	HST/BNSF R/W	# of Bents in BNSF/ UPRR R/W	Roadway Crossings	Other Constraints
27	WS1	7th Standard Rd	PC/PS	140	1	Coincident	0	Realigned SFW1, clearance allows for future widening	• Crosses HST on skew > 20° • Insufficient vertical clearance requires existing overcrossing to be removed • Retaining walls to minimize impacts to adjacent properties • MBGR to protect columns in CRZ
28	WS1	Kratzmeyer Rd	CIP + PC/PS	175	1	Coincident	0	Realigned SFW1, clearance allows for future widening	• Crosses HST on skew > 40° • MBGR to protect columns in CRZ
29	WS1	Renfro Rd	PC/PS	125	1	Coincident	0	Realigned SFW1, clearance allows for future widening	• MBGR to protect columns in CRZ • Allowance for future expansion of Santa Fe Way

04/02/2014 - RFP No.: HSR 13-57

	Alignment	Structure	Structure Type	Max Span (ft)	# of Bents in HST R/W	HST/BNSF R/W	# of Bents in BNSF/ UPRR R/W	Roadway Crossings	Other Constraints
30	WS2	7th Standard Rd	CIP + PC/PS	138.75	0	Coincident	1	Realigned SFW2; (expressway, 4 lane divided UTC)	• HST crosses over existing structure • Existing overcrossing to be removed • Foundations to be reused • Allowance for future expansion of Santa Fe Way • Retaining wall re-used to eliminate impacts to adjacent property owners and road impacts
31	WS2	Kratzmeyer Rd	CIP + PC/PS	160	2	Coincident	0	Realigned SFW2; (expressway, 4 lane divided UTC)	• Crosses HST on skew ~ 45° • MBGR to protect columns in CRZ
32	WS2	Renfro Rd	CIP + PC/PS	121	1	Coincident	1	Realigned SFW2; (expressway, 4 lane divided UTC)	• MBGR to protect columns in CRZ

04/02/2014 - RFP No.: HSR 13-57

Table 4.6-4
Constraints: HST and Roads

	Alignment	Structure	Structure Type	Max Span (ft)	# of Bents in HST R/W	Roadway Crossings	Other Constraints
1	H	Fargo Ave	CIP	133	0	7 1/2 Ave (2 lanes)	• MBGR to protect column • Realignment to provide better access to 7½ Ave
2	C2	Corcoran Hwy	CIP	155	0	5th Ave (2 lanes)	• Curved alignment • Super elevation accounted for in vertical clearance • Retaining wall used at top of slope to avoid impacts to canal at toe of slope.corc • MBGR to protect column
3	A1	Pond Rd	CIP	160	1	Magnolia Ave (2 lanes)	• Crosses HST on ~20° skew • Realigned to provide access to Magnolia Lane

04/02/2014 - RFP No.: HSR 13-57

Table 4.6-5
Constraints: Roads or Canals Only

	Alignment	Structure	Structure Type	Max Span (ft)	Roadway Crossings	Other Constraints
1	F1	G St / Fresno St	Precast Slab	42	Fresno St (2 lanes with median, shoulder and sidewalks)	• Retaining walls for depressed Fresno Street
2	F1	G St / Tulare St	CIP/Precast Slab	57	Tulare St (2 lanes with sidewalk on one side)	• Retaining walls for depressed Tulare Street • Tangent pile retaining walls used to minimize impacts on adjacent properties
3	F1	G St / Ventura St	Precast Slab	49	Venture St (4–12 foot lanes with median, shoulders and sidewalks on both sides)	
4	F1	East Ave	CIP RC	74	None	• Must conform to Church Ave structure elevation • Flared structure to allow for turning lane sight distance • RC structure chosen to facilitate construction
5	C3	Ave 148 East	CIP	132.5	Realigned SR43 (expressway 4 lane divided UTC)	
6	B2	Westside Pkwy/ Coffee Rd Off Ramps	CIP	150	Canal Maintenance Road	• Crosses Friant-Kern Canal • Overhead power line to be relocated
7	B3	Westside Pkwy/ Coffee Rd Off Ramps	CIP	150	Canal Maintenance Road	• Crosses Friant-Kern Canal • Overhead power line to be relocated

04/02/2014 - RFP No.: HSR 13-57

This page intentionally left blank.

04/02/2014 - RFP No.: HSR 13-57

Section 5.0

References

5.0 References

American Association of State Highway and Transportation Officials (AASHTO). 2011. *AASHTO Guide Specifications for LRFD Seismic Bridge Design with 2012 Interim Revisions.* 2nd Ed. Washington, DC: AASHTO. 2011.

BNSF and UPRR. 2007. *Guidelines for Railroad Grade Separation Projects*. Omaha, NE: BNSF and UPRR. January 24, 2007.

California High-Speed Rail Authority. n.d. *Technical Memorandum 2.8.1: Infrastructure Design for Safety and Security.* Draft.

California High-Speed Rail Authority. n.d. *Technical Memorandum 2.10.10: Track Structure Interaction.* Draft.

California High-Speed Rail Authority. n.d. *Technical Memorandum 1.1.10: High-Speed Equipment Structure Gauges.* Draft. Including Directive Drawings.

California High-Speed Rail Authority. n.d. *Technical Memorandum 2.3.3: High-Speed Train Aerial Structures.* Draft. Including Directive Drawings.

California High-Speed Rail Authority. 2010. *Technical Memorandum 2.10.5: 15% Seismic Benchmarks.* 0th Rev. March 2010.

California High-Speed Rail Authority. 2010. *Technical Memorandum 2.10.6: Fault Rupture Analysis and Mitigation.* 0th Rev. June 2010.

California High-Speed Rail Authority. 2011. *Technical Memorandum 2.3.2: Structure Design Loads.* 2nd Rev. April 2011.

California High-Speed Rail Authority. 2011. *Technical Memorandum 2.10.4: Seismic Design Criteria.* 1st Rev. May 2011.

Caltrans. 2005. *Bridge Design Aids.* Sacramento, CA: Caltrans. 2005.

Caltrans. 2006. *State Route 43 Transportation Concept Report*. Sacramento, CA: Caltrans. December 2006.

Caltrans. 2010. *Seismic Design Criteria*. Version 1.6. Sacramento, CA: Caltrans. November 2010.

Caltrans. 2011. AASHTO *LRFD Bridge Design Specifications with Caltrans Amendments*. 4th Ed. Sacramento, CA: Caltrans. November 2011.

Caltrans. 2012a. *Comparative Bridge Costs*. Sacramento, CA: Caltrans. January 2012.

Caltrans. 2012b. *Bridge Design Details*. Sacramento, CA: Caltrans. May 2012.

Caltrans. 2012c. *Bridge Memo to Designers*. Sacramento, CA: Caltrans. November 2012.

Thomas Roads Improvement Program. 2013. Program map.
http://www.bakersfieldfreeways.us/documents/TRIPProgramMap-Mar2012.pdf

URS/HMM/Arup Joint Venture. 2013*. Fresno to Bakersfield Draft 15% Design Submission*. October 2013.

04/02/2014 - RFP No.: HSR 13-57

This page intentionally left blank.

04/02/2014 - RFP No.: HSR 13-57