CALIFORNIA HIGH-SPEED TRAIN

Project Environmental Impact Report/Environmental Impact Statement

FINAL

Merced to Fresno Section Project EIR/EIS

Volume III:

Section L2 – Roadway and Grade Separation Plans

Hybrid Alternative with Ave 21 Wye

April 2012

CALIFORNIA High-Speed Rail Authority

U.S. Department of Transportation
Federal Railroad Administration

VOLUME 3 - ROADWAY

DRAWING No.	REV No.	DRAWING DESCRIPTION
		GENERAL
GE-A0003		PACKAGE 1A - ROADWAY- INDEX OF DRAWINGS - SHEET 1 OF 5
GE-A0004		PACKAGE 1A - ROADWAY- INDEX OF DRAWINGS - SHEET 2 OF 5
GE-A0005		PACKAGE 1A - ROADWAY- INDEX OF DRAWINGS - SHEET 3 OF 5
GE-A0006		PACKAGE 1A - ROADWAY- INDEX OF DRAWINGS - SHEET 4 OF 5
GE-A0007		PACKAGE 1A - ROADWAY- INDEX OF DRAWINGS - SHEET 5 OF 5
CV-B0002		PACKAGE 1A - ROADWAY- GENERAL STRUCTURAL NOTES
CV-B0003		PACKAGE 1A - ROADWAY - INDEX MAP
		ROADWAY
CV-T1001		PACKAGE 1A - ROADWAY - GRADE SEPARATION LAYOUT - W MCKINLEY AVE
CV-T1002		PACKAGE 1A - ROADWAY - GRADE SEPARATION PROFILE - W MCKINLEY
CV-T1003		PACKAGE 1A - ROADWAY - GRADE SEPARATION PROFILE - MCKINLEY AVE CONNECTOR/N WEBER AVE
CV-T1004		PACKAGE 1A - ROADWAY - GRADE SEPARATION LAYOUT - N GOLDEN STATE BLVD
CV-T1005		PACKAGE 1A - ROADWAY - GRADE SEPARATION PROFILE - N GOLDEN STATE BLVD
CV-T1006		PACKAGE 1A - ROADWAY - GRADE SEPARATION PROFILE - N GOLDEN STATE BLVD
CV-T1007		PACKAGE 1A - ROADWAY - GRADE SEPARATION LAYOUT - W OLIVE AVE
CV-T1008		PACKAGE 1A - ROADWAY - GRADE SEPARATION PROFILE - W OLIVE AVE
CV-T1009		PACKAGE 1A - ROADWAY - GRADE SEPARATION LAYOUT - BELMONT AVE
CV-T1010		PACKAGE 1A - ROADWAY - GRADE SEPARATION PROFILE - BELMONT AVE
CV-T1011		PACKAGE 1A - ROADWAY - GRADE SEPARATION PROFILE - N H ST/N WESLEY AVE
CV-T1012		PACKAGE 1A - ROADWAY - GRADE SEPARATION PROFILE - N CARUTH AVE/N FARRIS AVE
CV-R1001-THN		PACKAGE 1A - ROADWAY - ROADWAY LAYOUT - N THORNE AVE
CV-R1002-THN		PACKAGE 1A - ROADWAY - GRADE SEPARATION PROFILE- N THORNE AVE
CV-T3001		PACKAGE 1A - ROADWAY - ROADWAY / GRADE SEPARATION - TYPICAL SECTIONS
CV-T3002		PACKAGE 1A - ROADWAY - ROADWAY / GRADE SEPARATION - TYPICAL SECTIONS
CV-T3003		PACKAGE 1A - ROADWAY - ROADWAY / GRADE SEPARATION - TYPICAL SECTIONS
CV-T3004		PACKAGE 1A - ROADWAY - ROADWAY / GRADE SEPARATION - TYPICAL SECTIONS
CV-T3005		PACKAGE 1A - ROADWAY - ROADWAY / GRADE SEPARATION - TYPICAL SECTIONS
CV-T3006		PACKAGE 1A - ROADWAY - ROADWAY / GRADE SEPARATION - TYPICAL SECTIONS
CT1011		FRESNO SUBSECTION - ALIGNMENT F1 - GRADE SEPARATION LAYOUT - STANISLAUS ST AND TOULUMNE ST
CT1013		FRESNO SUBSECTION - ALIGNMENT F1 - GRADE SEPARATION LAYOUT - FRESNO ST
CT1016		FRESNO SUBSECTION - ALIGNMENT F1 - GRADE SEPARATION LAYOUT - TUOLUMNE ST (OVERHEAD)
CT1017		FRESNO SUBSECTION - ALIGNMENT F1 - GRADE SEPARATION LAYOUT - TUOLUMNE ST (UNDERPASS)
CT1019		FRESNO SUBSECTION - ALIGNMENT F1 - GRADE SEPARATION LAYOUT - VENTURA ST
CT1020		FRESNO SUBSECTION - ALIGNMENT F1 - GRADE SEPARATION LAYOUT - VENTURA ST
CT2011		FRESNO SUBSECTION - ALIGNMENT F1 - GRADE SEPARATION PROFILE - STANISLAUS ST
CT2012		FRESNO SUBSECTION - ALIGNMENT F1 - GRADE SEPARATION PROFILE - TUOLUME ST
CT2013		FRESNO SUBSECTION - ALIGNMENT F1 - GRADE SEPARATION PROFILE - FRESNO ST
CT2014		FRESNO SUBSECTION - ALIGNMENT F1 - GRADE SEPARATION PROFILE - H ST (FRESNO ST)
CT2015		FRESNO SUBSECTION - ALIGNMENT F1 - GRADE SEPARATION PROFILE - G ST (FRESNO ST)

VOLUME 3 - ROADWAY

CT2016		FRESNO SUBSECTION - ALIGNMENT F1 - GRADE SEPARATION PROFILE - TULARE ST (OVERHEAD)
CT2017		FRESNO SUBSECTION - ALIGNMENT F1 - GRADE SEPARATION PROFILE - TULARE ST (UNDERPASS)
CT2018		FRESNO SUBSECTION - ALIGNMENT F1 - GRADE SEPARATION PROFILE - G ST (TULARE STREET UNDERPASS)
CT2019		FRESNO SUBSECTION - ALIGNMENT F1 - GRADE SEPARATION PROFILE - VENTURA ST
CT2029		FRESNO SUBSECTION - ALIGNMENT F1 - GRADE SEPARATION PROFILE - G ST (OVER VENTURA) & H ST
CT3001		FRESNO SUBSECTION - ALIGNMENT F1 - ROADWAY / GRADE SEPARATION LAYOUT - TYPICAL CROSS SECTIONS
CT3002		FRESNO SUBSECTION - ALIGNMENT F1 - ROADWAY / GRADE SEPARATION LAYOUT - TYPICAL CROSS SECTIONS
CT3003		FRESNO SUBSECTION - ALIGNMENT F1 - ROADWAY / GRADE SEPARATION LAYOUT - TYPICAL CROSS SECTIONS
CT3004		FRESNO SUBSECTION - ALIGNMENT F1 - ROADWAY / GRADE SEPARATION LAYOUT - TYPICAL CROSS SECTIONS
CV-T5000		PACKAGE 1A - ROADWAY - CONSTRUCTION DETAILS
CV-T5001		PACKAGE 1A - ROADWAY - ROADWAY CLOSURE DETAILS
ST-I1001		PACKAGE 1A - ROADWAY - GOLDEN STATE BOULEVARD BRIDGE AT HERNDON CANAL - GENERAL PLAN
ST-I1002		PACKAGE 1A - ROADWAY - GOLDEN STATE BOULEVARD BRIDGE AT HERNDON CANAL - TYPICAL SECTIONS
ST-I1003		PACKAGE 1A - ROADWAY - GOLDEN STATE BOULEVARD BRIDGE AT HERNDON CANAL - FOUNDATION PLAN
ST-I1004		PACKAGE 1A - ROADWAY - SHAW AVE OVERHEAD - GENERAL PLAN NO. 1
ST-I1005		PACKAGE 1A - ROADWAY - SHAW AVE OVERHEAD - GENERAL PLAN NO. 2
ST-I1006		PACKAGE 1A - ROADWAY - SHAW AVE OVERHEAD - TYPICAL SECTIONS
ST-I1007		PACKAGE 1A - ROADWAY - SHAW AVE OVERHEAD - FOUNDATION PLAN
ST-I1008		PACKAGE 1A - ROADWAY - ASHLAN OVERHEAD - GENERAL PLAN
ST-I1009		PACKAGE 1A - ROADWAY - ASHLAN OVERHEAD - TYPICAL SECTION
ST-I1010		PACKAGE 1A - ROADWAY - ASHLAN OVERHEAD - FOUNDATION PLAN
ST-I1011		PACKAGE 1A - ROADWAY - ASHLAN OVERHEAD - BENT ELEVATION
ST-I1012		PACKAGE 1A - ROADWAY - CLINTON AVE OVERCROSSING - GENERAL PLAN
ST-I1013		PACKAGE 1A - ROADWAY - CLINTON AVE OVERCROSSING - TYPICAL SECTION
ST-I1014		PACKAGE 1A - ROADWAY - CLINTON AVE OVERCROSSING - FOUNDATION PLAN
ST-I1015		PACKAGE 1A - ROADWAY - CLINTON AVE OVERCROSSING - CONSTRUCTION DETAILS NO. 1
ST-I1016		PACKAGE 1A - ROADWAY - CLINTON AVE OVERCROSSING - CONSTRUCTION DETAILS NO. 2
ST-I1017		PACKAGE 1A - ROADWAY - FRESNO YARD OVERHEAD (CLINTON/UPRR) - GENERAL PLAN
ST-I1018		PACKAGE 1A - ROADWAY - FRESNO YARD OVERHEAD (CLINTON/UPRR) - TYPICAL SECTION
ST-I1019		PACKAGE 1A - ROADWAY - FRESNO YARD OVERHEAD (CLINTON/UPRR) - FOUNDATION PLAN
ST-I1020		PACKAGE 1A - ROADWAY - FRESNO YARD OVERHEAD (CLINTON/UPRR)- BENT ELEVATION
ST-I1021		PACKAGE 1A - ROADWAY - MCKINLEY BLVD UNDERCROSSING (WIDEN) - GENERAL PLAN
ST-I1022		PACKAGE 1A - ROADWAY - MCKINLEY BLVD UNDERCROSSING (WIDEN) - TYPICAL SECTION
ST-I1023		PACKAGE 1A - ROADWAY - MCKINLEY BLVD UNDERCROSSING (WIDEN) - FOUNDATION PLAN
ST-I1024		PACKAGE 1A - ROADWAY - VETERANS BOULEVARD OVERHEAD - DRAFT GENERAL PLAN
ST-I1025		PACKAGE 1A - ROADWAY - VETERANS BOULEVARD OVERHEAD - DRAFT GENERAL PLAN
ST-K1026		PACKAGE 1A - ROADWAY - DRAFT GENERAL PLAN - W MCKINLEY AVE
ST-K1027		PACKAGE 1A - ROADWAY - DRAFT GENERAL PLAN - W OLIVE AVE
ST-K1028		PACKAGE 1A - ROADWAY - DRAFT GENERAL PLAN - BELMONT AVE
ST-K1029		PACKAGE 1A - ROADWAY - DRAFT GENERAL PLAN - BELMONT AVE

I:\CHSR\60022962\Task-03_Merced-Fresno\CADD\Rail\Design\SHIELDSA\CP1A DEIR UPDATED\1S-GE-A0003.dgn $PLTDRVS$ $PENTBLS$ 4/3/2012 3:10:39 PM GibsonR1

REV	DATE	BY	CHK	APP	DESCRIPTION

DESIGNED BY A. SHIELDS
DRAWN BY A. SHIELDS
CHECKED BY A. BOONE
IN CHARGE A. BOONE
DATE 02/01/2012

PROPOSED PRELIMINARY DESIGN

NOT FOR CONSTRUCTION

AECOM Technical Services, Inc.
2020 L Street, Suite 300
Sacramento, CA 95811

CH2MHILL

CALIFORNIA HIGH-SPEED RAIL AUTHORITY

CALIFORNIA HIGH-SPEED TRAIN PROJECT
SIERRA SUBDIVISION
PACKAGE 1A
ROADWAY
INDEX OF DRAWINGS
SHEET 1 OF 5

CONTRACT NO.
DRAWING NO. GE-A0003
SCALE NONE
SHEET NO.

VOLUME 3 - ROADWAY

CV-GE001		PACKAGE 1A - ROADWAY - GENERAL NOTES
CV-R0001		PACKAGE 1A - ROADWAY - KEY MAP - GOLDEN STATE BOULEVARD
CV-R0002		PACKAGE 1A - ROADWAY - KEY MAP - SR 99 RE-ALIGNMENT
CV-R1001-GSB		PACKAGE 1A - ROADWAY - PLAN AND PROFILE - GOLDEN STATE BOULEVARD
CV-R1002-GSB		PACKAGE 1A - ROADWAY - PLAN AND PROFILE - GOLDEN STATE BOULEVARD
CV-R1003-GSB		PACKAGE 1A - ROADWAY - PLAN AND PROFILE - GOLDEN STATE BOULEVARD
CV-R1004-GSB		PACKAGE 1A - ROADWAY - PLAN AND PROFILE - GOLDEN STATE BOULEVARD
CV-R1005-GSB		PACKAGE 1A - ROADWAY - PLAN AND PROFILE - GOLDEN STATE BOULEVARD
CV-R1006-GSB		PACKAGE 1A - ROADWAY - PLAN AND PROFILE - GOLDEN STATE BOULEVARD
CV-R1007-GSB		PACKAGE 1A - ROADWAY - PLAN AND PROFILE - GOLDEN STATE BOULEVARD
CV-R1008-GSB		PACKAGE 1A - ROADWAY - PLAN AND PROFILE - GOLDEN STATE BOULEVARD
CV-R1009-GSB		PACKAGE 1A - ROADWAY - PLAN AND PROFILE - GOLDEN STATE BOULEVARD
CV-R1010-GSB		PACKAGE 1A - ROADWAY - PLAN AND PROFILE - GOLDEN STATE BOULEVARD
CV-R1011-GSB		PACKAGE 1A - ROADWAY - PLAN AND PROFILE - GOLDEN STATE BOULEVARD
CV-R1012-GSB		PACKAGE 1A - ROADWAY - PLAN AND PROFILE - VETERANS BOULEVARD
CV-R1013-GSB		PACKAGE 1A - ROADWAY - PLAN AND PROFILE - BULLARD AVENUE
CV-R1014-GSB		PACKAGE 1A - ROADWAY - PLAN AND PROFILE - SHAW AVENUE
CV-R1015-GSB		PACKAGE 1A - ROADWAY - PLAN AND PROFILE - SHAW AVENUE
CV-R1016-GSB		PACKAGE 1A - ROADWAY - PLAN AND PROFILE - CORNELIA AVENUE/SANTA ANA AVENUE
CV-R1017-GSB		PACKAGE 1A - ROADWAY - PLAN AND PROFILE - CORNELIA AVENUE/SANTA ANA AVENUE
CV-R3001-GSB		PACKAGE 1A - ROADWAY - TYPICAL SECTION - GOLDEN STATE BOULEVARD
CV-R3002-GSB		PACKAGE 1A - ROADWAY - TYPICAL SECTION - GOLDEN STATE BOULEVARD
CV-R3003-GSB		PACKAGE 1A - ROADWAY - TYPICAL SECTION - GOLDEN STATE BOULEVARD
CV-R3004-GSB		PACKAGE 1A - ROADWAY - TYPICAL SECTION - GOLDEN STATE BOULEVARD
CV-R3005-GSB		PACKAGE 1A - ROADWAY - TYPICAL SECTION - GOLDEN STATE BOULEVARD
CV-R3006-GSB		PACKAGE 1A - ROADWAY - TYPICAL SECTION - SHAW AVENUE
CV-R3007-GSB		PACKAGE 1A - ROADWAY - TYPICAL SECTION - SHAW AVENUE
CV-R3008-GSB		PACKAGE 1A - ROADWAY - TYPICAL SECTION - SHAW AVENUE & VETERANS BOULEVARD
CV-R3009-GSB		PACKAGE 1A - ROADWAY - TYPICAL SECTION - VETERANS BOULEVARD & BULLARD AVENUE
CV-R3010-GSB		PACKAGE 1A - ROADWAY - TYPICAL SECTION - CORNELIA AVENUE AND MOTEL DRIVE
CV-R3011-GSB		PACKAGE 1A - ROADWAY - TYPICAL SECTION - MOTEL, JENNIFER, KATHRYN & BARSTOW
CV-R3012-GSB		PACKAGE 1A - ROADWAY - TYPICAL SECTION - WEBER, MARKET & STATE
CV-I1001-GSB		PACKAGE 1A - CONSTRUCTION STAGING - STAGE 1 - GOLDEN STATE BOULEVARD
CV-I1002-GSB		PACKAGE 1A - CONSTRUCTION STAGING - STAGE 1 - GOLDEN STATE BOULEVARD
CV-I1003-GSB		PACKAGE 1A - CONSTRUCTION STAGING - STAGE 1 - GOLDEN STATE BOULEVARD
CV-I1004-GSB		PACKAGE 1A - CONSTRUCTION STAGING - STAGE 1 - GOLDEN STATE BOULEVARD
CV-I1005-GSB		PACKAGE 1A - CONSTRUCTION STAGING - STAGE 1 - GOLDEN STATE BOULEVARD
CV-I1006-GSB		PACKAGE 1A - CONSTRUCTION STAGING - STAGE 1 - GOLDEN STATE BOULEVARD
CV-I1007-GSB		PACKAGE 1A - CONSTRUCTION STAGING - STAGE 1 - GOLDEN STATE BOULEVARD

VOLUME 3 - ROADWAY

CV-I1008-GSB		PACKAGE 1A - CONSTRUCTION STAGING - STAGE 1 - GOLDEN STATE BOULEVARD
CV-I1009-GSB		PACKAGE 1A - CONSTRUCTION STAGING - STAGE 1 - GOLDEN STATE BOULEVARD
CV-I1010-GSB		PACKAGE 1A - CONSTRUCTION STAGING - STAGE 1 - GOLDEN STATE BOULEVARD
CV-I1011-GSB		PACKAGE 1A - CONSTRUCTION STAGING - STAGE 1 - GOLDEN STATE BOULEVARD
CV-I1012-GSB		PACKAGE 1A - CONSTRUCTION STAGING - STAGE 2 - GOLDEN STATE BOULEVARD
CV-I1013-GSB		PACKAGE 1A - CONSTRUCTION STAGING - STAGE 2 - GOLDEN STATE BOULEVARD
CV-I1014-GSB		PACKAGE 1A - CONSTRUCTION STAGING - STAGE 2 - GOLDEN STATE BOULEVARD
CV-I1015-GSB		PACKAGE 1A - CONSTRUCTION STAGING - STAGE 2 - GOLDEN STATE BOULEVARD
CV-I1016-GSB		PACKAGE 1A - CONSTRUCTION STAGING - STAGE 2 - GOLDEN STATE BOULEVARD
CV-I1017-GSB		PACKAGE 1A - CONSTRUCTION STAGING - STAGE 2 - GOLDEN STATE BOULEVARD
CV-I1018-GSB		PACKAGE 1A - CONSTRUCTION STAGING - STAGE 2 - GOLDEN STATE BOULEVARD
CV-I1019-GSB		PACKAGE 1A - CONSTRUCTION STAGING - STAGE 2 - GOLDEN STATE BOULEVARD
CV-I1020-GSB		PACKAGE 1A - CONSTRUCTION STAGING - STAGE 2 - GOLDEN STATE BOULEVARD
CV-I1021-GSB		PACKAGE 1A - CONSTRUCTION STAGING - STAGE 2 - GOLDEN STATE BOULEVARD
CV-I1022-GSB		PACKAGE 1A - CONSTRUCTION STAGING - STAGE 3 - GOLDEN STATE BOULEVARD
CV-I1023-GSB		PACKAGE 1A - CONSTRUCTION STAGING - STAGE 3 - GOLDEN STATE BOULEVARD
CV-G1001-GSB		PACKAGE 1A - ROADWAY - GRADING AND DRAINAGE PLAN - GOLDEN STATE BOULEVARD
CV-G1002-GSB		PACKAGE 1A - ROADWAY - GRADING AND DRAINAGE PLAN - GOLDEN STATE BOULEVARD
CV-G1003-GSB		PACKAGE 1A - ROADWAY - GRADING AND DRAINAGE PLAN - GOLDEN STATE BOULEVARD
CV-G1004-GSB		PACKAGE 1A - ROADWAY - GRADING AND DRAINAGE PLAN - GOLDEN STATE BOULEVARD
CV-G1005-GSB		PACKAGE 1A - ROADWAY - GRADING AND DRAINAGE PLAN - GOLDEN STATE BOULEVARD
CV-G1006-GSB		PACKAGE 1A - ROADWAY - GRADING AND DRAINAGE PLAN - GOLDEN STATE BOULEVARD
CV-G1007-GSB		PACKAGE 1A - ROADWAY - GRADING AND DRAINAGE PLAN - GOLDEN STATE BOULEVARD
CV-G1008-GSB		PACKAGE 1A - ROADWAY - GRADING AND DRAINAGE PLAN - GOLDEN STATE BOULEVARD
CV-G1009-GSB		PACKAGE 1A - ROADWAY - GRADING AND DRAINAGE PLAN - GOLDEN STATE BOULEVARD
CV-G1010-GSB		PACKAGE 1A - ROADWAY - GRADING AND DRAINAGE PLAN - GOLDEN STATE BOULEVARD
CV-G1011-GSB		PACKAGE 1A - ROADWAY - GRADING AND DRAINAGE PLAN - GOLDEN STATE BOULEVARD
CV-R1001-R99		PACKAGE 1A - ROADWAY - LAYOUTS - SR 99 - HIGHWAY
CV-R1002-R99		PACKAGE 1A - ROADWAY - LAYOUTS - SR 99 - HIGHWAY
CV-R1003-R99		PACKAGE 1A - ROADWAY - LAYOUTS - SR 99 - HIGHWAY, RAMPS
CV-R1004-R99		PACKAGE 1A - ROADWAY - LAYOUTS - SR 99 - HIGHWAY, RAMPS
CV-R1005-R99		PACKAGE 1A - ROADWAY - LAYOUTS - SR 99 - HIGHWAY, RAMPS
CV-R1006-R99		PACKAGE 1A - ROADWAY - LAYOUTS - SR 99 - HIGHWAY, LOCAL ROADS
CV-R1007-R99		PACKAGE 1A - ROADWAY - LAYOUTS - SR 99 - HIGHWAY, LOCAL ROADS
CV-R1008-R99		PACKAGE 1A - ROADWAY - LAYOUTS - SR 99 - HIGHWAY
CV-R1009-R99		PACKAGE 1A - ROADWAY - LAYOUTS - SR 99 - HIGHWAY, LOCAL ROADS
CV-R1010-R99		PACKAGE 1A - ROADWAY - LAYOUTS - SR 99 - HIGHWAY, RAMPS, LOCAL ROADS
CV-R1011-R99		PACKAGE 1A - ROADWAY - LAYOUTS - SR 99 - HIGHWAY, RAMPS, LOCAL ROADS
CV-R1012-R99		PACKAGE 1A - ROADWAY - LAYOUTS - SR 99 - W CLINTON AVE

REV	DATE	BY	CHK	APP	DESCRIPTION

DESIGNED BY A. SHIELDS
DRAWN BY A. SHIELDS
CHECKED BY A. BOONE
IN CHARGE A. BOONE
DATE 02/01/2012

PROPOSED PRELIMINARY DESIGN

NOT FOR CONSTRUCTION

AECOM Technical Services, Inc.
2020 L Street, Suite 300
Sacramento, CA 95811

CH2MHILL

CALIFORNIA HIGH-SPEED RAIL AUTHORITY

CALIFORNIA HIGH-SPEED TRAIN PROJECT
SIERRA SUBDIVISION
PACKAGE 1A
ROADWAY
INDEX OF DRAWINGS
SHEET 2 OF 5

CONTRACT NO.
DRAWING NO. GE-A0004
SCALE NONE
SHEET NO.

DeMarcoF 4/3/2012 1:30:53 PM cansrp-r1.+tbl CHSR_half_black_color_rias.tbl CP1A DEIR UPDATED\1S-GE-A0004.dgn

VOLUME 3 - ROADWAY

CV-R1013-R99		PACKAGE 1A - ROADWAY - LAYOUTS - SR 99 - W CLINTON AVE
CV-R1014-R99		PACKAGE 1A - ROADWAY - LAYOUTS - SR 99 - N GOLDEN STATE BLVD
CV-R1015-R99		PACKAGE 1A - ROADWAY - LAYOUTS - SR 99 - RAMPS
CV-R1016-R99		PACKAGE 1A - ROADWAY - LAYOUTS - SR 99 - LOCAL ROADS
CV-R1017-R99		PACKAGE 1A - ROADWAY - LAYOUTS - SR 99 - LOCAL ROADS
CV-R1018-R99		PACKAGE 1A - ROADWAY - LAYOUTS - SR 99 - ASHLAN AVE
CV-R1019-R99		PACKAGE 1A - ROADWAY - LAYOUTS - SR 99 - ASHLAN AVE
CV-R1020-R99		PACKAGE 1A - ROADWAY - LAYOUTS - SR 99 - RAMPS
CV-R1021-R99		PACKAGE 1A - ROADWAY - LAYOUTS - SR 99 - RAMPS
CV-R1101-R99		PACKAGE 1A - ROADWAY - PROFILE AND SUPERELEVATION - SR 99 - HIGHWAY "A"
CV-R1102-R99		PACKAGE 1A - ROADWAY - PROFILE AND SUPERELEVATION - SR 99 - HIGHWAY "A"
CV-R1103-R99		PACKAGE 1A - ROADWAY - PROFILE AND SUPERELEVATION - SR 99 - HIGHWAY "A"
CV-R1104-R99		PACKAGE 1A - ROADWAY - PROFILE AND SUPERELEVATION - SR 99 - HIGHWAY "A"
CV-R1105-R99		PACKAGE 1A - ROADWAY - PROFILE AND SUPERELEVATION - SR 99 - HIGHWAY "A"
CV-R1106-R99		PACKAGE 1A - ROADWAY - PROFILE AND SUPERELEVATION - SR 99 - HIGHWAY "A"
CV-R1107-R99		PACKAGE 1A - ROADWAY - PROFILE AND SUPERELEVATION - SR 99 - HIGHWAY "A"
CV-R1108-R99		PACKAGE 1A - ROADWAY - PROFILE AND SUPERELEVATION - SR 99 - HIGHWAY "A"
CV-R1109-R99		PACKAGE 1A - ROADWAY - PROFILE AND SUPERELEVATION - SR 99 - HIGHWAY "A"
CV-R1110-R99		PACKAGE 1A - ROADWAY - PROFILE AND SUPERELEVATION - SR 99 - W CLINTON AVE "C"
CV-R1111-R99		PACKAGE 1A - ROADWAY - PROFILE AND SUPERELEVATION - SR 99 - W CLINTON AVE "C"
CV-R1112-R99		PACKAGE 1A - ROADWAY - PROFILE AND SUPERELEVATION - SR 99 - RAMP "C1"
CV-R1113-R99		PACKAGE 1A - ROADWAY - PROFILE AND SUPERELEVATION - SR 99 - RAMP "C2"
CV-R1114-R99		PACKAGE 1A - ROADWAY - PROFILE AND SUPERELEVATION - SR 99 - RAMP "C3"
CV-R1115-R99		PACKAGE 1A - ROADWAY - PROFILE AND SUPERELEVATION - SR 99 - RAMP "C4"
CV-R1116-R99		PACKAGE 1A - ROADWAY - PROFILE AND SUPERELEVATION - SR 99 - RAMP "MS"
CV-R1117-R99		PACKAGE 1A - ROADWAY - PROFILE AND SUPERELEVATION - SR 99 - RAMP "MS"
CV-R1118-R99		PACKAGE 1A - ROADWAY - PROFILE AND SUPERELEVATION - SR 99 - RAMP "MS"
CV-R1119-R99		PACKAGE 1A - ROADWAY - PROFILE AND SUPERELEVATION - SR 99 - RAMP "MN4"
CV-R1120-R99		PACKAGE 1A - ROADWAY - PROFILE AND SUPERELEVATION - SR 99 - RAMP "MN"
CV-R1121-R99		PACKAGE 1A - ROADWAY - PROFILE AND SUPERELEVATION - SR 99 - RAMP "MN"
CV-R1122-R99		PACKAGE 1A - ROADWAY - PROFILE AND SUPERELEVATION - SR 99 - ASHLAN AVE "AS"
CV-R1123-R99		PACKAGE 1A - ROADWAY - PROFILE AND SUPERELEVATION - SR 99 - ASHLAN AVE "AS"
CV-R1124-R99		PACKAGE 1A - ROADWAY - PROFILE AND SUPERELEVATION - SR 99 - RAMP "AS1", "AS2"
CV-R1125-R99		PACKAGE 1A - ROADWAY - PROFILE AND SUPERELEVATION - SR 99 - RAMP "AS3"
CV-R1126-R99		PACKAGE 1A - ROADWAY - PROFILE AND SUPERELEVATION - SR 99 - RAMP "AS4"
CV-R1127-R99		PACKAGE 1A - ROADWAY - PROFILE AND SUPERELEVATION - SR 99 - RAMP "AS4"
CV-R1128-R99		PACKAGE 1A - ROADWAY - PROFILE AND SUPERELEVATION - SR 99 - RAMP "AS4"
CV-R1129-R99		PACKAGE 1A - ROADWAY - PROFILE AND SUPERELEVATION - SR 99 - RAMP "AS5"
CV-R1130-R99		PACKAGE 1A - ROADWAY - PROFILE AND SUPERELEVATION - SR 99 - RAMP "H1"
CV-R1131-R99		PACKAGE 1A - ROADWAY - PROFILE AND SUPERELEVATION - SR 99 - RAMP "H1"

VOLUME 3 - ROADWAY

CV-R1132-R99		PACKAGE 1A - ROADWAY - PROFILE AND SUPERELEVATION - SR 99 - RAMP "H2"
CV-R1133-R99		PACKAGE 1A - ROADWAY - PROFILE AND SUPERELEVATION - SR 99 - PLEASANT AVE "P"
CV-R1134-R99		PACKAGE 1A - ROADWAY - PROFILE AND SUPERELEVATION - SR 99 - SHIELDS AVE "S", "SC"
CV-R1135-R99		PACKAGE 1A - ROADWAY - PROFILE AND SUPERELEVATION - SR 99 - VALENTINE AVE "VAL"
CV-R1136-R99		PACKAGE 1A - ROADWAY - PROFILE AND SUPERELEVATION - SR 99 - N PARKWAY DR "V1"
CV-R0001-R99		PACKAGE 1A - ROADWAY - TYPICAL SECTIONS - SR 99 - HIGHWAY
CV-R0002-R99		PACKAGE 1A - ROADWAY - TYPICAL SECTIONS - SR 99 - HIGHWAY
CV-R0003-R99		PACKAGE 1A - ROADWAY - TYPICAL SECTIONS - SR 99 - HIGHWAY
CV-R0004-R99		PACKAGE 1A - ROADWAY - TYPICAL SECTIONS - SR 99 - HIGHWAY
CV-R0005-R99		PACKAGE 1A - ROADWAY - TYPICAL SECTIONS - SR 99 - HIGHWAY
CV-R0006-R99		PACKAGE 1A - ROADWAY - TYPICAL SECTIONS - SR 99 - HIGHWAY
CV-R0007-R99		PACKAGE 1A - ROADWAY - TYPICAL SECTIONS - SR 99 - HIGHWAY
CV-R0008-R99		PACKAGE 1A - ROADWAY - TYPICAL SECTIONS - SR 99 - HIGHWAY
CV-R0009-R99		PACKAGE 1A - ROADWAY - TYPICAL SECTIONS - SR 99 - HIGHWAY
CV-R0010-R99		PACKAGE 1A - ROADWAY - TYPICAL SECTIONS - SR 99 - RAMP "C1"
CV-R0011-R99		PACKAGE 1A - ROADWAY - TYPICAL SECTIONS - SR 99 - RAMP "C2"
CV-R0012-R99		PACKAGE 1A - ROADWAY - TYPICAL SECTIONS - SR 99 - RAMP "C3"
CV-R0013-R99		PACKAGE 1A - ROADWAY - TYPICAL SECTIONS - SR 99 - RAMP "C4"
CV-R0014-R99		PACKAGE 1A - ROADWAY - TYPICAL SECTIONS - SR 99 - W CLINTON AVE
CV-R0015-R99		PACKAGE 1A - ROADWAY - TYPICAL SECTIONS - SR 99 - W CLINTON AVE
CV-R0016-R99		PACKAGE 1A - ROADWAY - TYPICAL SECTIONS - SR 99 - RAMP "MS", "MN"
CV-R0017-R99		PACKAGE 1A - ROADWAY - TYPICAL SECTIONS - SR 99 - RAMP "MN4"
CV-R0018-R99		PACKAGE 1A - ROADWAY - TYPICAL SECTIONS - SR 99 - RAMP "AS1", "AS2", "AS3"
CV-R0019-R99		PACKAGE 1A - ROADWAY - TYPICAL SECTIONS - SR 99 - RAMP "AS4"
CV-R0020-R99		PACKAGE 1A - ROADWAY - TYPICAL SECTIONS - SR 99 - RAMP "AS4", "AS5"
CV-R0021-R99		PACKAGE 1A - ROADWAY - TYPICAL SECTIONS - SR 99 - ASHLAN AVE
CV-R0022-R99		PACKAGE 1A - ROADWAY - TYPICAL SECTIONS - SR 99 - RAMP "H1", "H2"
CV-R0023-R99		PACKAGE 1A - ROADWAY - TYPICAL SECTIONS - SR 99 - LOCAL ROAD "W"
CV-R0024-R99		PACKAGE 1A - ROADWAY - TYPICAL SECTIONS - SR 99 - LOCAL ROAD "S", "SC", "P", "VAL", 'V1"
CV-R0025-R99		PACKAGE 1A - ROADWAY - TYPICAL SECTIONS - SR 99 - LOCAL ROAD "WP", "NP", "VA"
CV-R7001-R99		PACKAGE 1A - ROADWAY - PAVEMENT DELINEATION AND SIGNING - SR 99 RE - ALIGNMENT
CV-R7002-R99		PACKAGE 1A - ROADWAY - PAVEMENT DELINEATION AND SIGNING - SR 99 RE - ALIGNMENT
CV-R7003-R99		PACKAGE 1A - ROADWAY - PAVEMENT DELINEATION AND SIGNING - SR 99 RE - ALIGNMENT
CV-R7004-R99		PACKAGE 1A - ROADWAY - PAVEMENT DELINEATION AND SIGNING - SR 99 RE - ALIGNMENT
CV-R7005-R99		PACKAGE 1A - ROADWAY - PAVEMENT DELINEATION AND SIGNING - SR 99 RE - ALIGNMENT
CV-R7006-R99		PACKAGE 1A - ROADWAY - PAVEMENT DELINEATION AND SIGNING - SR 99 RE - ALIGNMENT
CV-R7007-R99		PACKAGE 1A - ROADWAY - PAVEMENT DELINEATION AND SIGNING - SR 99 RE - ALIGNMENT
CV-R7008-R99		PACKAGE 1A - ROADWAY - PAVEMENT DELINEATION AND SIGNING - SR 99 RE - ALIGNMENT
CV-R7009-R99		PACKAGE 1A - ROADWAY - PAVEMENT DELINEATION AND SIGNING - SR 99 RE - ALIGNMENT

DeMarcoF 4/3/2012 1:31:17 PM cahsrp-r1.tbl CHSR_half_black_color_rlsteel5 P:\60022962\Task-03_Merced-Fresno\CADD\Rail\Design\SHIELDSA\CP1A DEIR UPDATED\1S-GE-A0005.dgn

REV	DATE	BY	CHK	APP	DESCRIPTION

DESIGNED BY A. SHIELDS
DRAWN BY A. SHIELDS
CHECKED BY A. BOONE
IN CHARGE A. BOONE
DATE 02/01/2012

PROPOSED PRELIMINARY DESIGN

NOT FOR CONSTRUCTION

AECOM Technical Services, Inc.
2020 L Street, Suite 300
Sacramento, CA 95811

CH2MHILL

CALIFORNIA HIGH-SPEED RAIL AUTHORITY

CALIFORNIA HIGH-SPEED TRAIN PROJECT
SIERRA SUBDIVISION
PACKAGE 1A
ROADWAY
INDEX OF DRAWINGS
SHEET 3 OF 5

CONTRACT NO.
DRAWING NO. GE-A0005
SCALE NONE
SHEET NO.

VOLUME 3 - ROADWAY

CV-R7010-R99		PACKAGE 1A - ROADWAY - PAVEMENT DELINEATION AND SIGNING - SR 99 RE - ALIGNMENT
CV-R7011-R99		PACKAGE 1A - ROADWAY - PAVEMENT DELINEATION AND SIGNING - SR 99 RE - ALIGNMENT
CV-R7012-R99		PACKAGE 1A - ROADWAY - PAVEMENT DELINEATION AND SIGNING - SR 99 RE - ALIGNMENT
CV-R7013-R99		PACKAGE 1A - ROADWAY - PAVEMENT DELINEATION AND SIGNING - SR 99 RE - ALIGNMENT
CV-R7014-R99		PACKAGE 1A - ROADWAY - PAVEMENT DELINEATION AND SIGNING - SR 99 RE - ALIGNMENT
CV-R7015-R99		PACKAGE 1A - ROADWAY - PAVEMENT DELINEATION AND SIGNING - SR 99 RE - ALIGNMENT
CV-R7016-R99		PACKAGE 1A - ROADWAY - PAVEMENT DELINEATION AND SIGNING - SR 99 RE - ALIGNMENT
CV-R7017-R99		PACKAGE 1A - ROADWAY - PAVEMENT DELINEATION AND SIGNING - SR 99 RE - ALIGNMENT
CV-R7018-R99		PACKAGE 1A - ROADWAY - PAVEMENT DELINEATION AND SIGNING - SR 99 RE - ALIGNMENT
CV-R7019-R99		PACKAGE 1A - ROADWAY - PAVEMENT DELINEATION AND SIGNING - SR 99 RE - ALIGNMENT
CV-R7020-R99		PACKAGE 1A - ROADWAY - PAVEMENT DELINEATION AND SIGNING - SR 99 RE - ALIGNMENT
CV-R7021-R99		PACKAGE 1A - ROADWAY - PAVEMENT DELINEATION AND SIGNING - SR 99 RE - ALIGNMENT
CV-I1001-R99		PACKAGE 1A - CONSTRUCTION STAGING - STAGE 1A - SR 99 RE - ALIGNMENT
CV-I1002-R99		PACKAGE 1A - CONSTRUCTION STAGING - STAGE 1A - SR 99 RE - ALIGNMENT
CV-I1003-R99		PACKAGE 1A - CONSTRUCTION STAGING - STAGE 1A - SR 99 RE - ALIGNMENT
CV-I1004-R99		PACKAGE 1A - CONSTRUCTION STAGING - STAGE 1A - SR 99 RE - ALIGNMENT
CV-I1005-R99		PACKAGE 1A - CONSTRUCTION STAGING - STAGE 1A - SR 99 RE - ALIGNMENT
CV-I1006-R99		PACKAGE 1A - CONSTRUCTION STAGING - STAGE 1A - SR 99 RE - ALIGNMENT
CV-I1007-R99		PACKAGE 1A - CONSTRUCTION STAGING - STAGE 1A - SR 99 RE - ALIGNMENT
CV-I1008-R99		PACKAGE 1A - CONSTRUCTION STAGING - STAGE 1B - SR 99 RE - ALIGNMENT
CV-I1009-R99		PACKAGE 1A - CONSTRUCTION STAGING - STAGE 1B - SR 99 RE - ALIGNMENT
CV-I1010-R99		PACKAGE 1A - CONSTRUCTION STAGING - STAGE 1B - SR 99 RE - ALIGNMENT
CV-I1011-R99		PACKAGE 1A - CONSTRUCTION STAGING - STAGE 1B - SR 99 RE - ALIGNMENT
CV-I1012-R99		PACKAGE 1A - CONSTRUCTION STAGING - STAGE 1B - SR 99 RE - ALIGNMENT
CV-I1013-R99		PACKAGE 1A - CONSTRUCTION STAGING - STAGE 1C - SR 99 RE - ALIGNMENT
CV-I1014-R99		PACKAGE 1A - CONSTRUCTION STAGING - STAGE 1C - SR 99 RE - ALIGNMENT
CV-I1015-R99		PACKAGE 1A - CONSTRUCTION STAGING - STAGE 1C - SR 99 RE - ALIGNMENT
CV-I1016-R99		PACKAGE 1A - CONSTRUCTION STAGING - STAGE 1C - SR 99 RE - ALIGNMENT
CV-I1017-R99		PACKAGE 1A - CONSTRUCTION STAGING - STAGE 1C - SR 99 RE - ALIGNMENT
CV-I1018-R99		PACKAGE 1A - CONSTRUCTION STAGING - STAGE 1C - SR 99 RE - ALIGNMENT
CV-I1019-R99		PACKAGE 1A - CONSTRUCTION STAGING - STAGE 1C - SR 99 RE - ALIGNMENT
CV-I1020-R99		PACKAGE 1A - CONSTRUCTION STAGING - STAGE 1C - SR 99 RE - ALIGNMENT
CV-I1021-R99		PACKAGE 1A - CONSTRUCTION STAGING - STAGE 1C - SR 99 RE - ALIGNMENT
CV-I1022-R99		PACKAGE 1A - CONSTRUCTION STAGING - STAGE 1C - SR 99 RE - ALIGNMENT
CV-I1023-R99		PACKAGE 1A - CONSTRUCTION STAGING - STAGE 1C - SR 99 RE - ALIGNMENT
CV-I1024-R99		PACKAGE 1A - CONSTRUCTION STAGING - STAGE 1C - SR 99 RE - ALIGNMENT
CV-I1025-R99		PACKAGE 1A - CONSTRUCTION STAGING - STAGE 1C - SR 99 RE - ALIGNMENT
CV-I1026-R99		PACKAGE 1A - CONSTRUCTION STAGING - STAGE 2A - SR 99 RE - ALIGNMENT
CV-I1027-R99		PACKAGE 1A - CONSTRUCTION STAGING - STAGE 2A - SR 99 RE - ALIGNMENT
CV-I1028-R99		PACKAGE 1A - CONSTRUCTION STAGING - STAGE 2A - SR 99 RE - ALIGNMENT

VOLUME 3 - ROADWAY

CV-I1029-R99		PACKAGE 1A - CONSTRUCTION STAGING - STAGE 2A - SR 99 RE - ALIGNMENT
CV-I1030-R99		PACKAGE 1A - CONSTRUCTION STAGING - STAGE 2A - SR 99 RE - ALIGNMENT
CV-I1031-R99		PACKAGE 1A - CONSTRUCTION STAGING - STAGE 2A - SR 99 RE - ALIGNMENT
CV-I1032-R99		PACKAGE 1A - CONSTRUCTION STAGING - STAGE 2A - SR 99 RE - ALIGNMENT
CV-I1033-R99		PACKAGE 1A - CONSTRUCTION STAGING - STAGE 2A - SR 99 RE - ALIGNMENT
CV-I1034-R99		PACKAGE 1A - CONSTRUCTION STAGING - STAGE 2A - SR 99 RE - ALIGNMENT
CV-I1035-R99		PACKAGE 1A - CONSTRUCTION STAGING - STAGE 2A - SR 99 RE - ALIGNMENT
CV-I1036-R99		PACKAGE 1A - CONSTRUCTION STAGING - STAGE 2A - SR 99 RE - ALIGNMENT
CV-I1037-R99		PACKAGE 1A - CONSTRUCTION STAGING - STAGE 2B - SR 99 RE - ALIGNMENT
CV-I1038-R99		PACKAGE 1A - CONSTRUCTION STAGING - STAGE 2B - SR 99 RE - ALIGNMENT
CV-I1039-R99		PACKAGE 1A - CONSTRUCTION STAGING - STAGE 2B - SR 99 RE - ALIGNMENT
CV-I1040-R99		PACKAGE 1A - CONSTRUCTION STAGING - STAGE 2B - SR 99 RE - ALIGNMENT
CV-I1041-R99		PACKAGE 1A - CONSTRUCTION STAGING - STAGE 2B - SR 99 RE - ALIGNMENT
CV-I1042-R99		PACKAGE 1A - CONSTRUCTION STAGING - STAGE 2B - SR 99 RE - ALIGNMENT
CV-I1043-R99		PACKAGE 1A - CONSTRUCTION STAGING - STAGE 2B - SR 99 RE - ALIGNMENT
CV-I1044-R99		PACKAGE 1A - CONSTRUCTION STAGING - STAGE 2B - SR 99 RE - ALIGNMENT
CV-I1045-R99		PACKAGE 1A - CONSTRUCTION STAGING - STAGE 2B - SR 99 RE - ALIGNMENT
CV-I1046-R99		PACKAGE 1A - CONSTRUCTION STAGING - STAGE 2B - SR 99 RE - ALIGNMENT
CV-I1047-R99		PACKAGE 1A - CONSTRUCTION STAGING - STAGE 2B - SR 99 RE - ALIGNMENT
CV-I1048-R99		PACKAGE 1A - CONSTRUCTION STAGING - STAGE 2B - SR 99 RE - ALIGNMENT
CV-I1049-R99		PACKAGE 1A - CONSTRUCTION STAGING - STAGE 2B - SR 99 RE - ALIGNMENT
CV-I1050-R99		PACKAGE 1A - CONSTRUCTION STAGING - STAGE 2B - SR 99 RE - ALIGNMENT
CV-I1051-R99		PACKAGE 1A - CONSTRUCTION STAGING - STAGE 2B - SR 99 RE - ALIGNMENT
CV-I1052-R99		PACKAGE 1A - CONSTRUCTION STAGING - STAGE 2B - SR 99 RE - ALIGNMENT
CV-I1053-R99		PACKAGE 1A - CONSTRUCTION STAGING - STAGE 2B - SR 99 RE - ALIGNMENT
CV-I1054-R99		PACKAGE 1A - CONSTRUCTION STAGING - STAGE 2B - SR 99 RE - ALIGNMENT
CV-I1055-R99		PACKAGE 1A - CONSTRUCTION STAGING - STAGE 2B - SR 99 RE - ALIGNMENT
CV-G1001-R99		PACKAGE 1A - ROADWAY - GRADING AND DRAINAGE PLAN - SR 99 RE-ALIGNMENT
CV-G1002-R99		PACKAGE 1A - ROADWAY - GRADING AND DRAINAGE PLAN - SR 99 RE-ALIGNMENT
CV-G1003-R99		PACKAGE 1A - ROADWAY - GRADING AND DRAINAGE PLAN - SR 99 RE-ALIGNMENT
CV-G1003A-R99		PACKAGE 1A - ROADWAY - GRADING AND DRAINAGE PLAN - SR 99 RE-ALIGNMENT
CV-G1004-R99		PACKAGE 1A - ROADWAY - GRADING AND DRAINAGE PLAN - SR 99 RE-ALIGNMENT
CV-G1004A-R99		PACKAGE 1A - ROADWAY - GRADING AND DRAINAGE PLAN - SR 99 RE-ALIGNMENT
CV-G1005-R99		PACKAGE 1A - ROADWAY - GRADING AND DRAINAGE PLAN - SR 99 RE-ALIGNMENT
CV-G1006-R99		PACKAGE 1A - ROADWAY - GRADING AND DRAINAGE PLAN - SR 99 RE-ALIGNMENT
CV-G1007-R99		PACKAGE 1A - ROADWAY - GRADING AND DRAINAGE PLAN - SR 99 RE-ALIGNMENT
CV-G1008-R99		PACKAGE 1A - ROADWAY - GRADING AND DRAINAGE PLAN - SR 99 RE-ALIGNMENT
CV-G1009-R99		PACKAGE 1A - ROADWAY - GRADING AND DRAINAGE PLAN - SR 99 RE-ALIGNMENT
CV-G1010-R99		PACKAGE 1A - ROADWAY - GRADING AND DRAINAGE PLAN - SR 99 RE-ALIGNMENT
CV-G1011-R99		PACKAGE 1A - ROADWAY - GRADING AND DRAINAGE PLAN - SR 99 RE-ALIGNMENT

REV	DATE	BY	CHK	APP	DESCRIPTION

DESIGNED BY A. SHIELDS
DRAWN BY A. SHIELDS
CHECKED BY A. BOONE
IN CHARGE A. BOONE
DATE 02/01/2012

PROPOSED PRELIMINARY DESIGN

NOT FOR CONSTRUCTION

AECOM Technical Services, Inc.
2020 L Street, Suite 300
Sacramento, CA 95811

CH2MHILL

CALIFORNIA HIGH-SPEED RAIL AUTHORITY

CALIFORNIA HIGH-SPEED TRAIN PROJECT
SIERRA SUBDIVISION
PACKAGE 1A
ROADWAY
INDEX OF DRAWINGS
SHEET 4 OF 5

CONTRACT NO.
DRAWING NO. GE-A0006
SCALE NONE
SHEET NO.

DeMarcoF 4/3/2012 1:31:36 PM cahsrp-r1.+tbl CHSR_half_black_color_rgb.tbl c:\pwworking\00022962\Task-03_Merced-Fresno\CADD\Rail\Design\SHIELDSA\CP1A DEIR UPDATED\1S-GE-A0006.dgn

VOLUME 3 - ROADWAY

CV-G1012-R99		PACKAGE 1A - ROADWAY - GRADING AND DRAINAGE PLAN - SR 99 RE-ALIGNMENT
CV-G1013-R99		PACKAGE 1A - ROADWAY - GRADING AND DRAINAGE PLAN - SR 99 RE-ALIGNMENT
CV-G1014-R99		PACKAGE 1A - ROADWAY - GRADING AND DRAINAGE PLAN - SR 99 RE-ALIGNMENT
CV-G1015-R99		PACKAGE 1A - ROADWAY - GRADING AND DRAINAGE PLAN - SR 99 RE-ALIGNMENT
CV-G1016-R99		PACKAGE 1A - ROADWAY - GRADING AND DRAINAGE PLAN - SR 99 RE-ALIGNMENT
CV-G1017-R99		PACKAGE 1A - ROADWAY - GRADING AND DRAINAGE PLAN - SR 99 RE-ALIGNMENT
CV-G1018-R99		PACKAGE 1A - ROADWAY - GRADING AND DRAINAGE PLAN - SR 99 RE-ALIGNMENT
CV-G1019-R99		PACKAGE 1A - ROADWAY - GRADING AND DRAINAGE PLAN - SR 99 RE-ALIGNMENT
CV-G1020-R99		PACKAGE 1A - ROADWAY - GRADING AND DRAINAGE PLAN - SR 99 RE-ALIGNMENT
CV-G1021-R99		PACKAGE 1A - ROADWAY - GRADING AND DRAINAGE PLAN - SR 99 RE-ALIGNMENT

VOLUME 3 - ROADWAY

GibsonR1 4/3/2012 2:03:56 PM $PENTBLS$ $PLTDRVS$ I:\CHSR\60022962\Task-03_Merced-Fresno\CADD\Rail\Design\SHIELDSA\CP1A DEIR UPDATED\1S-GE-A0007.dgn

REV	DATE	BY	CHK	APP	DESCRIPTION

DESIGNED BY A. SHIELDS
DRAWN BY A. SHIELDS
CHECKED BY A. BOONE
IN CHARGE A. BOONE
DATE 02/01/2012

PROPOSED PRELIMINARY DESIGN

NOT FOR CONSTRUCTION

AECOM Technical Services, Inc.
2020 L Street, Suite 300
Sacramento, CA 95811

CH2MHILL

CALIFORNIA HIGH-SPEED RAIL AUTHORITY

CALIFORNIA HIGH-SPEED TRAIN PROJECT
SIERRA SUBDIVISION
PACKAGE 1A
ROADWAY
INDEX OF DRAWINGS
SHEET 5 OF 5

CONTRACT NO.
DRAWING NO. GE-A0007
SCALE NONE
SHEET NO.

GENERAL NOTES
LOAD AND RESISTANCE FACTOR DESIGN

DESIGN:	HIGH SPEED RAIL TECHNICAL MEMORANDA, AASHTO LRFD BRIDGE DESIGN SPECIFICATIONS 4th EDITION AND CALTRANS AMENDMENTS
STANDARD SPECIFICATIONS:	HIGH SPEED RAIL SPECIFICATIONS, CALTRANS STANDARD SPECIFICATIONS DATED MAY 2006
SEISMIC DESIGN:	HIGH SPEED RAIL TECHNICAL MEMORANDA, CALTRANS SEISMIC DESIGN CRITERIA (SDC) VERSION 1.6, NOVEMBER 2010
DEAD LOAD:	INCLUDES 35 PSF FOR FUTURE WEARING SURFACE
LIVE LOADING:	HL93 AND PERMIT DESIGN LOAD
WIND LOAD:	100 MPH WIND VELOCITY
REINFORCED CONCRETE:	fy = 60 ksi f'c = SEE CONCRETE STRENGTH AND TYPE LIMITS
PRESTRESSED CONCRETE:	LOW RELAXATION STRANDS fpy = 243 ksi fpu = 270 ksi f'ci = 5 ksi AT TIME OF RELEASE f'c = 7 ksi AT 28 DAYS
PILES:	CLASS 200 PILES B2-8 CLASS 140 PILES CLASS 90 PILES B2-5

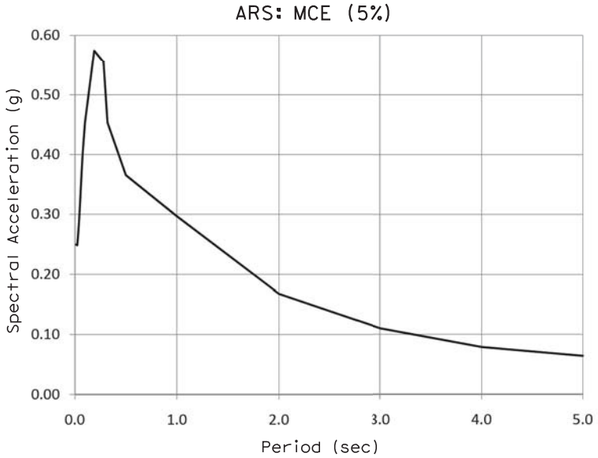

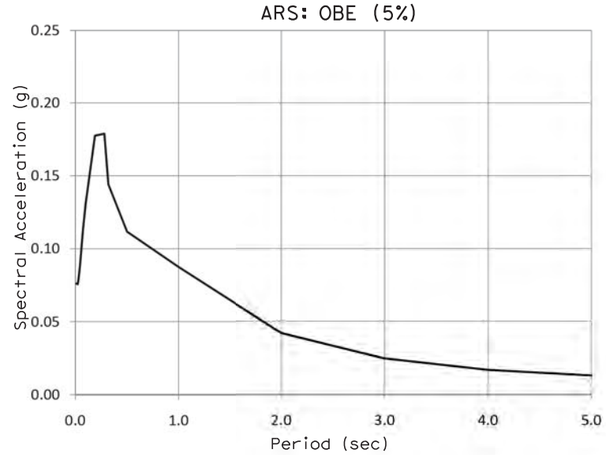

GENERAL STRUCTURAL NOTES

1. PILE/SHAFT LENGTHS TO BE DETERMINED
2. EMBEDDED ITEMS REQUIRED FOR UTILITY INSTALLATIONS ARE NOT SHOWN ON THE STRUCTURAL DRAWINGS. CONTRACTOR SHALL REFER TO THE UTILITY DRAWINGS FOR THE LOCATIONS AND DETAILS OF THESE ITEMS.
3. MSE WALL REINFORCEMENT AND PANEL TO BE DETERMINED
4. ALL STRUCTURAL DRAWINGS SHALL BE READ IN CONJUNCTION WITH THE SPECIFICATIONS AND OTHER DRAWINGS RELATED TO THE WORK.
5. ALL SPANS ARE DESIGNED CONTINUOUS FOR LIVE LOAD.

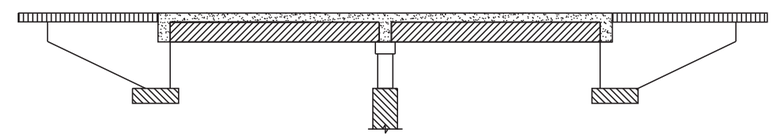

STRUCTURAL CONCRETE, BRIDGE
f'c = 5 ksi AT 28 DAYS

STRUCTURAL CONCRETE, APPROACH SLAB
f'c = 4 ksi AT 28 DAYS

STRUCTURAL CONCRETE, SUPERSTRUCTURE
f'c = 5 ksi AT 28 DAYS

STRUCTURAL CONCRETE, BRIDGE FOOTING
f'c = 4 ksi AT 28 DAYS

PRECAST PRESTRESSED GIRDER
f'c = SEE PRESTRESSED CONCRETE

CONCRETE STRENGTH AND TYPE LIMITS
NO SCALE

REV	DATE	BY	CHK	APP	DESCRIPTION

DESIGNED BY M. BURGARD
DRAWN BY D. BARNHART
CHECKED BY E. MORAN
IN CHARGE Y. BERI
DATE 12/08/11

PROPOSED PRELIMINARY DESIGN
NOT FOR CONSTRUCTION

URS | HMM | ARUP
CALIFORNIA HIGH-SPEED TRAIN

CALIFORNIA HIGH-SPEED RAIL AUTHORITY

CALIFORNIA HIGH-SPEED TRAIN PROJECT
SIERRA SUBDIVISION
PACKAGE 1A
ROADWAY
GENERAL STRUCTURAL NOTES

CONTRACT NO.
DRAWING NO. CV-B0002
SCALE AS SHOWN
SHEET NO.

BUR52804 12/8/2011 10:02:51 AM CAHSRP-r1.tbl CHSR_PDF_half_black.pltG:_Sacramento\URS\235413 CA HSR Fresno Palmdale\16.0 Drawings\S1 HSR06-0003\Sheet Files\Package#1\Structures\S1-ST-I0001-GNT.dgn

LOCATION NO.	SHEET TITLE	ROADWAY DWG NO.	STRUCTURE DWG NO.
1	GRADE SEPARATION - MCKINLEY AVE	CV-T1001 - CV-T1003	ST-K1026
2	GRADE SEPARATION - OLIVE AVE	CV-T1007 - CV-T1008	ST-K1027
3	GRADE SEPARATION - BELMONT AVE	CV-T1009 - CV-T1010	ST-K1028 - ST-K1029
21	LOCAL ROAD - MCKINLEY AVE CONNECTOR	CV-T1001 & CV-T1003	-
22	LOCAL ROAD - N WEBER AVE	CV-T1001 & CV-T1003	-
23	LOCAL ROAD - N WEST AVE	CV-T1004	-
24	LOCAL ROAD - N GOLDEN STATE BLVD	CV-T1001 - CV-T1006	-
25	LOCAL ROAD - N H ST / N WEBER AVE	CV-T1009 & CV-T1011	-
26	LOCAL ROAD - N WESLEY AVE	CV-T1009 & CV-T1011	-
27	LOCAL ROAD - N THORNE AVE	CV-R1001-THN - CV-R1002-THN	-

LOCATION NO.	SHEET TITLE	ROADWAY DWG NO.	STRUCTURE DWG NO.
40	ROAD CLOSURE - N DELNO AVE	CV-T1007	-
41	ROAD CLOSURE - N GOLDEN STATE BLVD	CV-T1004 - CV-T1007	-
42	ROAD CLOSURE - N HARRISON AVE	CV-T1009	-
43	ROAD CLOSURE - N THORNE AVE	CV-T1009	-
44	ROAD CLOSURE - DIVISADERO ST	CV-T5001	-

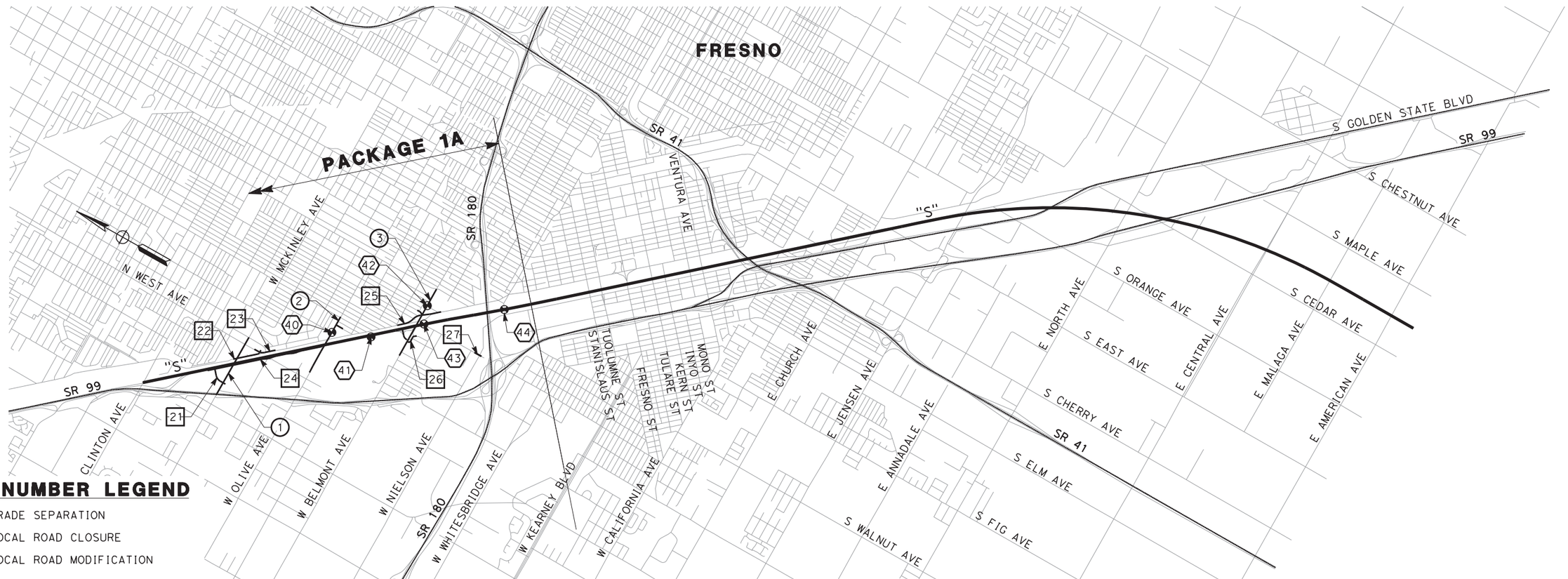

LOCATION NUMBER LEGEND

(#) - INDICATES GRADE SEPARATION

⟨#⟩ - INDICATES LOCAL ROAD CLOSURE

[#] - INDICATES LOCAL ROAD MODIFICATION

REV	DATE	BY	CHK	APP	DESCRIPTION

DESIGNED BY I. JOSIFEK
DRAWN BY V. ORTEGA
CHECKED BY B. RAWSON
IN CHARGE O. EARLE
DATE 02/17/12

PROPOSED PRELIMINARY DESIGN

NOT FOR CONSTRUCTION

URS | HMM | ARUP
CALIFORNIA HIGH-SPEED TRAIN

CALIFORNIA HIGH-SPEED RAIL AUTHORITY

CALIFORNIA HIGH-SPEED TRAIN PROJECT
SIERRA SUBDIVISION
PACKAGE 1A
ROADWAY
INDEX MAP

CONTRACT NO.
DRAWING NO. CV-B0003
SCALE NO SCALE
SHEET NO.

NET53329 2/16/2012 4:12:34 PM CAHSRP-r1.tbl CHSR_PDF_half_black.pl+\\SNA-DATA2\SNA_Project$_Sacramento\URS\235413 CA HSR Fresno Palmdale\16.0 Drawings\S1 HSR06-0003\Sheet Files\Package#1\Civil\S1-0

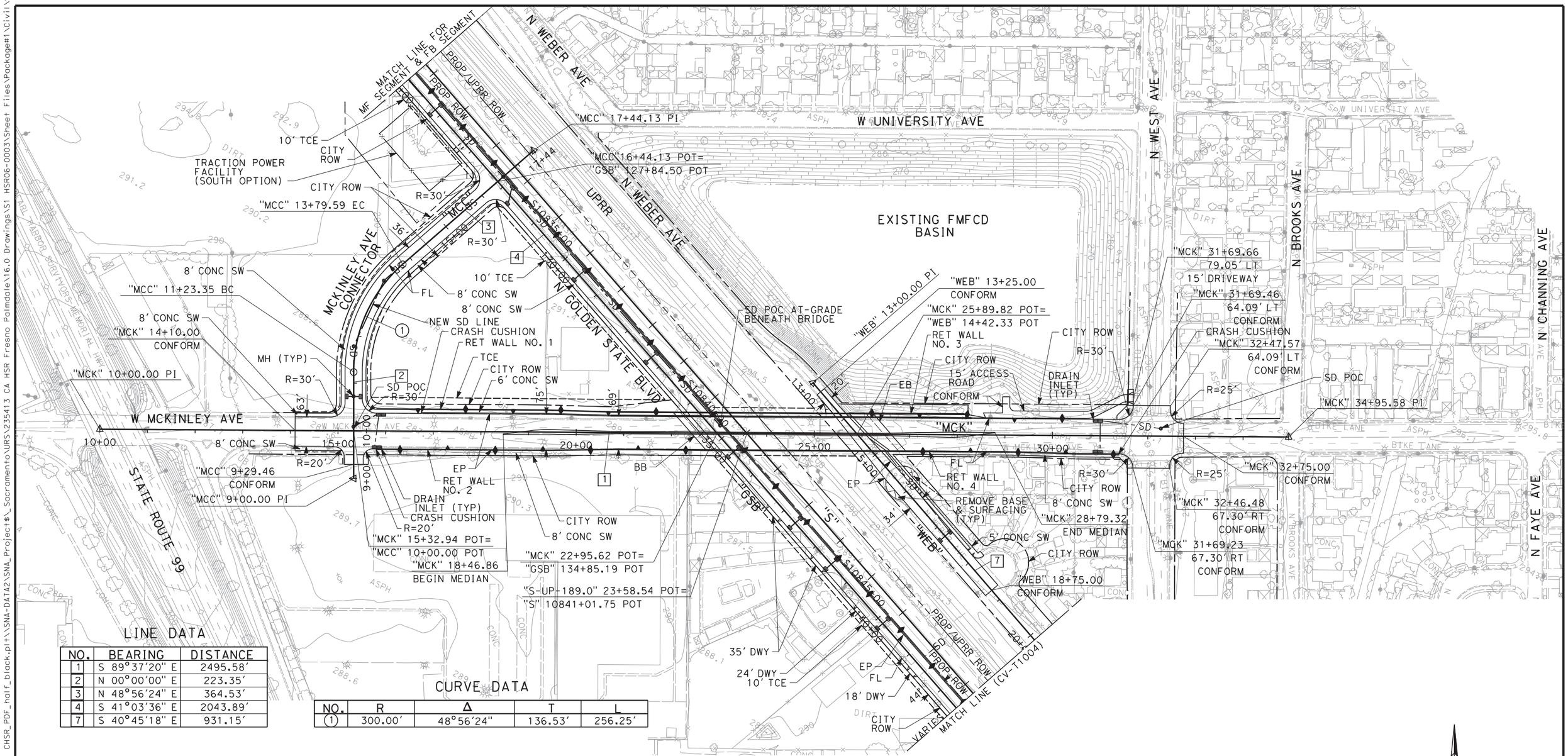

LINE DATA

NO.	BEARING	DISTANCE
1	S 89°37'20" E	2495.58'
2	N 00°00'00" E	223.35'
3	N 48°56'24" E	364.53'
4	S 41°03'36" E	2043.89'
7	S 40°45'18" E	931.15'

CURVE DATA

NO.	R	Δ	T	L
1	300.00'	48°56'24"	136.53'	256.25'

RETAINING WALL DATA

NO.	LOCATIONS		LENGTH	AVG HEIGHT
	BEGIN	END		
1	45.50' LT "MCK" 15+80.44	42.50' LT "MCK" 22+17.63	637'	20'
2	37.50' RT "MCK" 15+80.44	34.50' RT "MCK" 22+88.21	708'	20'
3	42.50' LT "MCK" 26+07.75	34.50' LT "MCK" 30+70.00	447'	10'
4	34.50' RT "MCK" 26+78.12	37.50' RT "MCK" 31+39.23	461'	10'

REV	DATE	BY	CHK	APP	DESCRIPTION

DESIGNED BY J. NETTLETON
DRAWN BY V. ORTEGA
CHECKED BY B. RAWSON
IN CHARGE O. EARLE
DATE 02/17/12

PROPOSED PRELIMINARY DESIGN

NOT FOR CONSTRUCTION

URS | HMM | ARUP
CALIFORNIA HIGH-SPEED TRAIN

CALIFORNIA HIGH-SPEED RAIL AUTHORITY

CALIFORNIA HIGH-SPEED TRAIN PROJECT
SIERRA SUBDIVISION
PACKAGE 1A
ROADWAY
GRADE SEPARATION LAYOUT
W MCKINLEY AVE

CONTRACT NO.
DRAWING NO. CV-T1001
SCALE AS SHOWN
SHEET NO.

NET53329 2/15/2012 8:15:49 AM CAHSRP-R1.TBL CHSR_PDF_half_black.plt \\SNA-DATA2\SNA_Project$_Sacramento\URS\235413 CA HSR Fresno Palmdale\16.0 Drawings\S1 HSR06-0003\Sheet Files\Package#1\Civil\S1-0

NOTES:

1. FOR BRIDGE INFORMATION, SEE STRUCTURAL PLANS.
2. SIDEWALK PROFILE CONTROLLED BY ROADWAY PROFILE EXCEPT AS SHOWN.

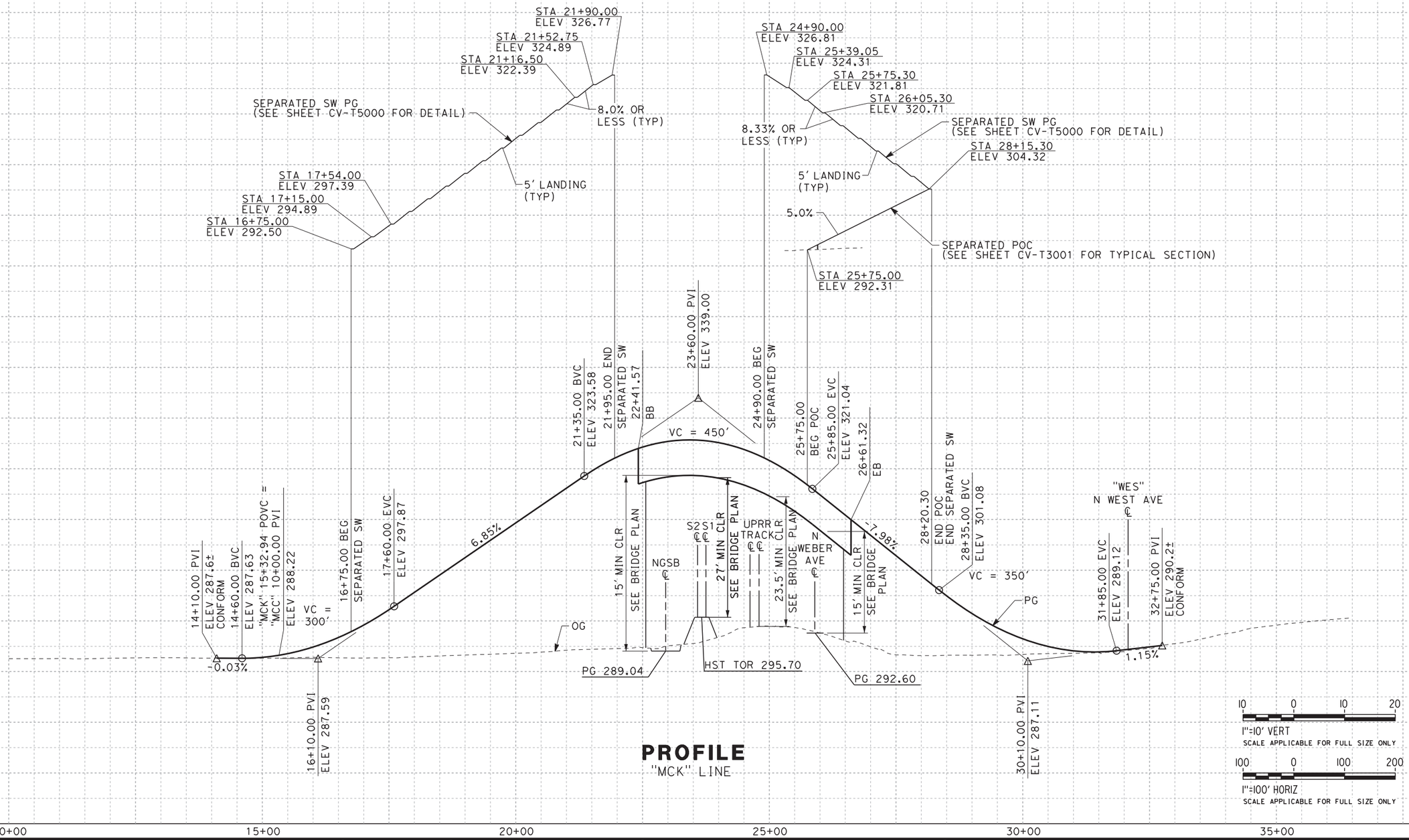

PROFILE

"MCK" LINE

REV	DATE	BY	CHK	APP	DESCRIPTION

DESIGNED BY J. NETTLETON
DRAWN BY V. ORTEGA
CHECKED BY B. RAWSON
IN CHARGE Q. EARLE
DATE 12/08/11

PROPOSED PRELIMINARY DESIGN

NOT FOR CONSTRUCTION

URS | HMM | ARUP
CALIFORNIA HIGH-SPEED TRAIN

CALIFORNIA HIGH-SPEED RAIL AUTHORITY

CALIFORNIA HIGH-SPEED TRAIN PROJECT
SIERRA SUBDIVISION
PACKAGE 1A
ROADWAY
GRADE SEPARATION PROFILE
W MCKINLEY

CONTRACT NO.
DRAWING NO. CV-T1002
SCALE AS SHOWN
SHEET NO.

ort52801 12/2/2011 2:38:49 PM CAHSRP-r1.tbl CHSR_PDF_half_black.pltG:_Sacramento\URS\235413 CA HSR Fresno Palmdale\16.0 Drawings\S1 HSR06-0003\Sheet Files\Package#1\Civil\S1-CV-T1002.dgn

NOTES:

1. FOR BRIDGE INFORMATION, SEE STRUCTURAL PLANS.

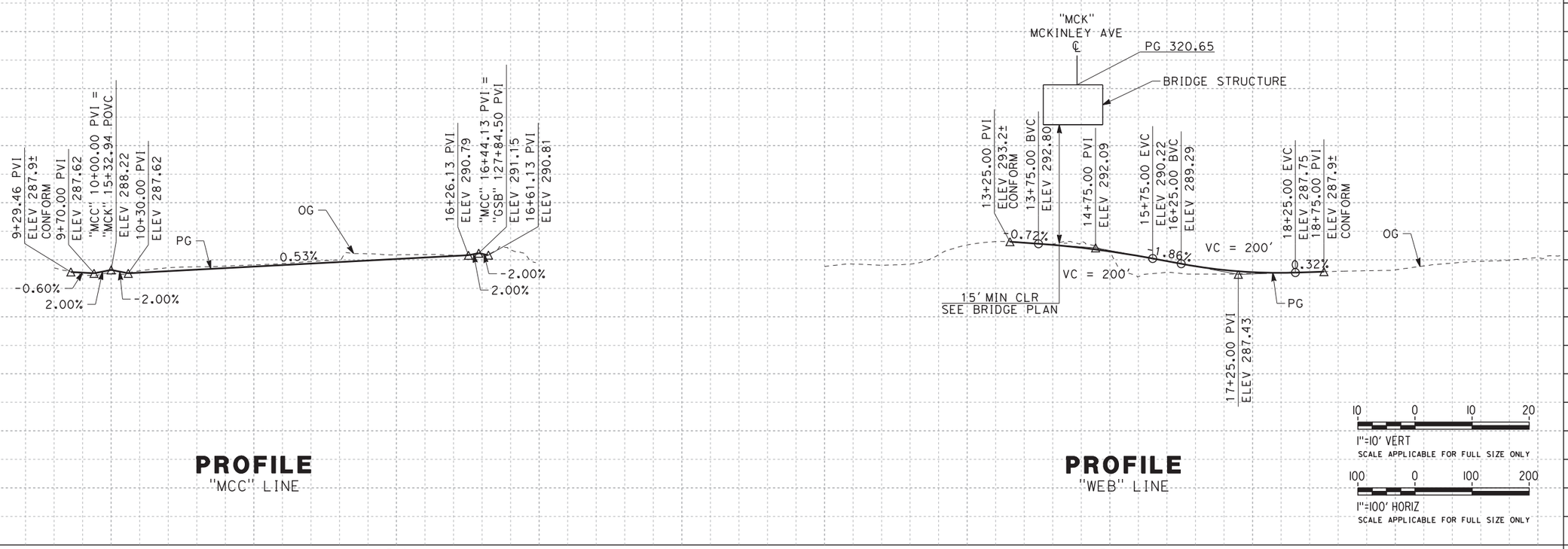

PROFILE
"MCC" LINE

PROFILE
"WEB" LINE

REV	DATE	BY	CHK	APP	DESCRIPTION

DESIGNED BY J. NETTLETON
DRAWN BY V. ORTEGA
CHECKED BY B. RAWSON
IN CHARGE O. EARLE
DATE 12/08/11

PROPOSED PRELIMINARY DESIGN

NOT FOR CONSTRUCTION

URS | HMM | ARUP
CALIFORNIA HIGH-SPEED TRAIN

CALIFORNIA HIGH-SPEED RAIL AUTHORITY

CALIFORNIA HIGH-SPEED TRAIN PROJECT
SIERRA SUBDIVISION
PACKAGE 1A
ROADWAY
GRADE SEPARATION PROFILE
MCKINLEY AVE CONNECTOR/N WEBER AVE

CONTRACT NO.
DRAWING NO. CV-T1003
SCALE AS SHOWN
SHEET NO.

DEA54595 12/1/2011 3:59:55 PM CAHSRP-r1.tbl CHSR_PDF_half_black.pltG:_Sacramento\URS\235413 CA HSR Fresno Palmdale\16.0 Drawings\S1 HSR06-0003\Sheet Files\Package#1\Civil\S1-CV-T1003.dgn

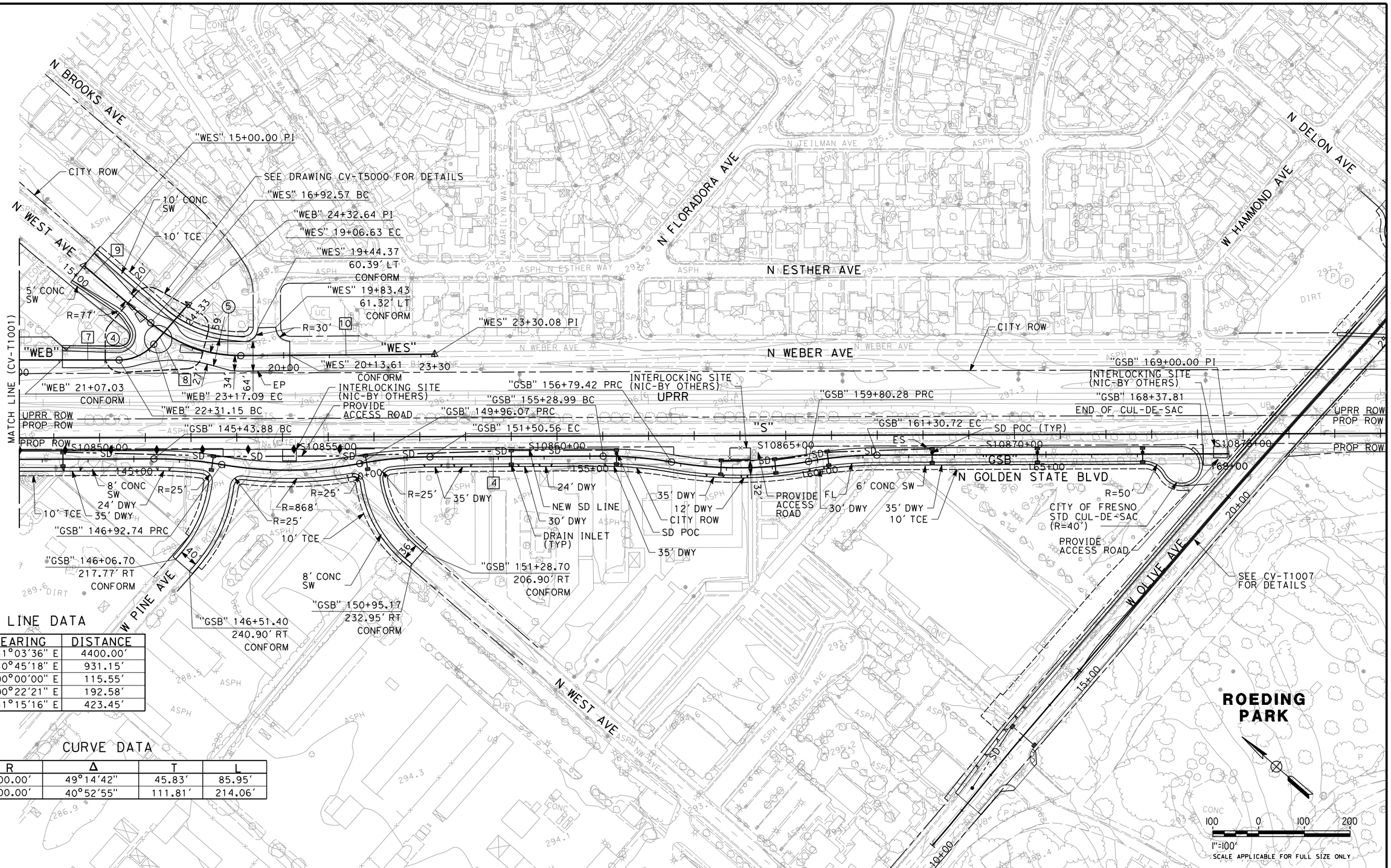

LINE DATA

NO.	BEARING	DISTANCE
4	S 41°03'36" E	4400.00'
7	N 40°45'18" E	931.15'
8	N 90°00'00" E	115.55'
9	N 00°22'21" E	192.58'
10	S 41°15'16" E	423.45'

CURVE DATA

NO.	R	Δ	T	L
4	100.00'	49°14'42"	45.83'	85.95'
5	300.00'	40°52'55"	111.81'	214.06'

REV	DATE	BY	CHK	APP	DESCRIPTION

DESIGNED BY J. NETTLETON
DRAWN BY V. ORTEGA
CHECKED BY B. RAWSON
IN CHARGE Q. EARLE
DATE 03/20/12

PROPOSED PRELIMINARY DESIGN

NOT FOR CONSTRUCTION

URS | HMM | ARUP
CALIFORNIA HIGH-SPEED TRAIN

CALIFORNIA HIGH-SPEED RAIL AUTHORITY

CALIFORNIA HIGH-SPEED TRAIN PROJECT
SIERRA SUBDIVISION
PACKAGE 1A
ROADWAY
GRADE SEPARATION LAYOUT
N GOLDEN STATE BLVD

CONTRACT NO.
DRAWING NO. CV-T1004
SCALE AS SHOWN
SHEET NO.

NET53329 3/20/2012 2:53:16 PM CAHSRP-r1.tbl CHSR_PDF_half_black.pltG:_Sacramento\URS\235413 CA HSR Fresno Palmdale\16.0 Drawings\S1 HSR06-0003\Sheet Files\Package#1\Civil\S1-CV-T1004.dgn

NOTES:

1. FOR BRIDGE INFORMATION, SEE STRUCTURAL PLANS.

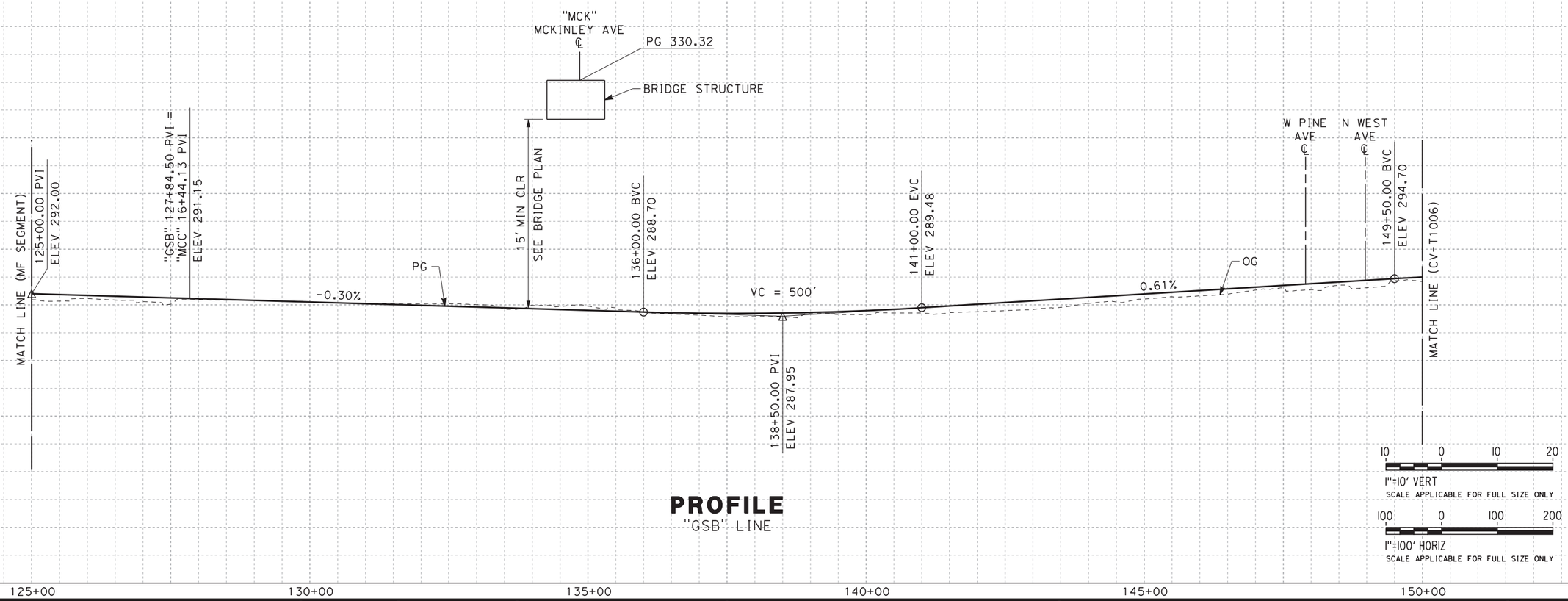

PROFILE

"GSB" LINE

REV	DATE	BY	CHK	APP	DESCRIPTION

DESIGNED BY J. NETTLETON
DRAWN BY V. ORTEGA
CHECKED BY B. RAWSON
IN CHARGE Q. EARLE
DATE 02/17/12

PROPOSED PRELIMINARY DESIGN

NOT FOR CONSTRUCTION

URS | HMM | ARUP
CALIFORNIA HIGH-SPEED TRAIN

CALIFORNIA HIGH-SPEED RAIL AUTHORITY

CALIFORNIA HIGH-SPEED TRAIN PROJECT
SIERRA SUBDIVISION
PACKAGE 1A
ROADWAY
GRADE SEPARATION PROFILE
N GOLDEN STATE BLVD

CONTRACT NO.
DRAWING NO. CV-T1005
SCALE AS SHOWN
SHEET NO.

NET53329 2/15/2012 9:34:56 AM CAHSRP-r1.tbl CHSR_PDF_half_black.plt\SNA-DATA2\SNA_Project#$_Sacramento\URS\235413 CA HSR Fresno Palmdale\16.0 Drawings\S1 HSR06-0003\Sheet Files\Package#1\Civil\S1-0

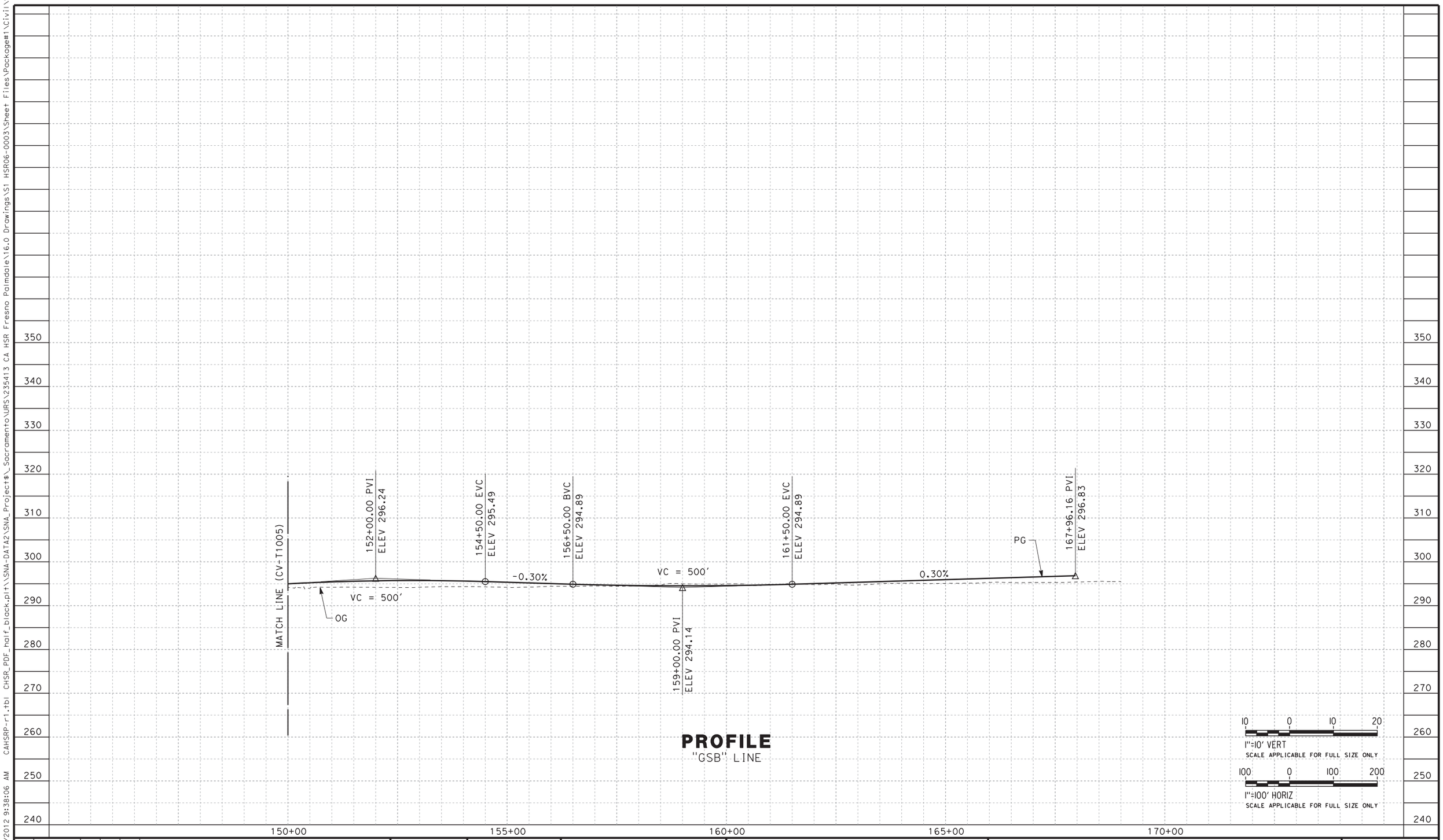

PROFILE

"GSB" LINE

REV	DATE	BY	CHK	APP	DESCRIPTION

DESIGNED BY J. NETTLETON
DRAWN BY V. ORTEGA
CHECKED BY B. RAWSON
IN CHARGE O. EARLE
DATE 02/17/12

PROPOSED PRELIMINARY DESIGN

NOT FOR CONSTRUCTION

URS | HMM | ARUP
CALIFORNIA HIGH-SPEED TRAIN

CALIFORNIA HIGH-SPEED RAIL AUTHORITY

CALIFORNIA HIGH-SPEED TRAIN PROJECT
SIERRA SUBDIVISION
PACKAGE 1A
ROADWAY
GRADE SEPARATION PROFILE
N GOLDEN STATE BLVD

CONTRACT NO.
DRAWING NO. CV-T1006
SCALE AS SHOWN
SHEET NO.

NET53329 2/15/2012 9:38:06 AM CAHSRP-r1.tbl CHSR_PDF_half_black.pl+\\SNA-DATA2\SNA_Project$_Sacramento\URS\235413 CA HSR Fresno Palmdale\16.0 Drawings\S1 HSR06-0003\Sheet Files\Package#1\Civil\S1-0

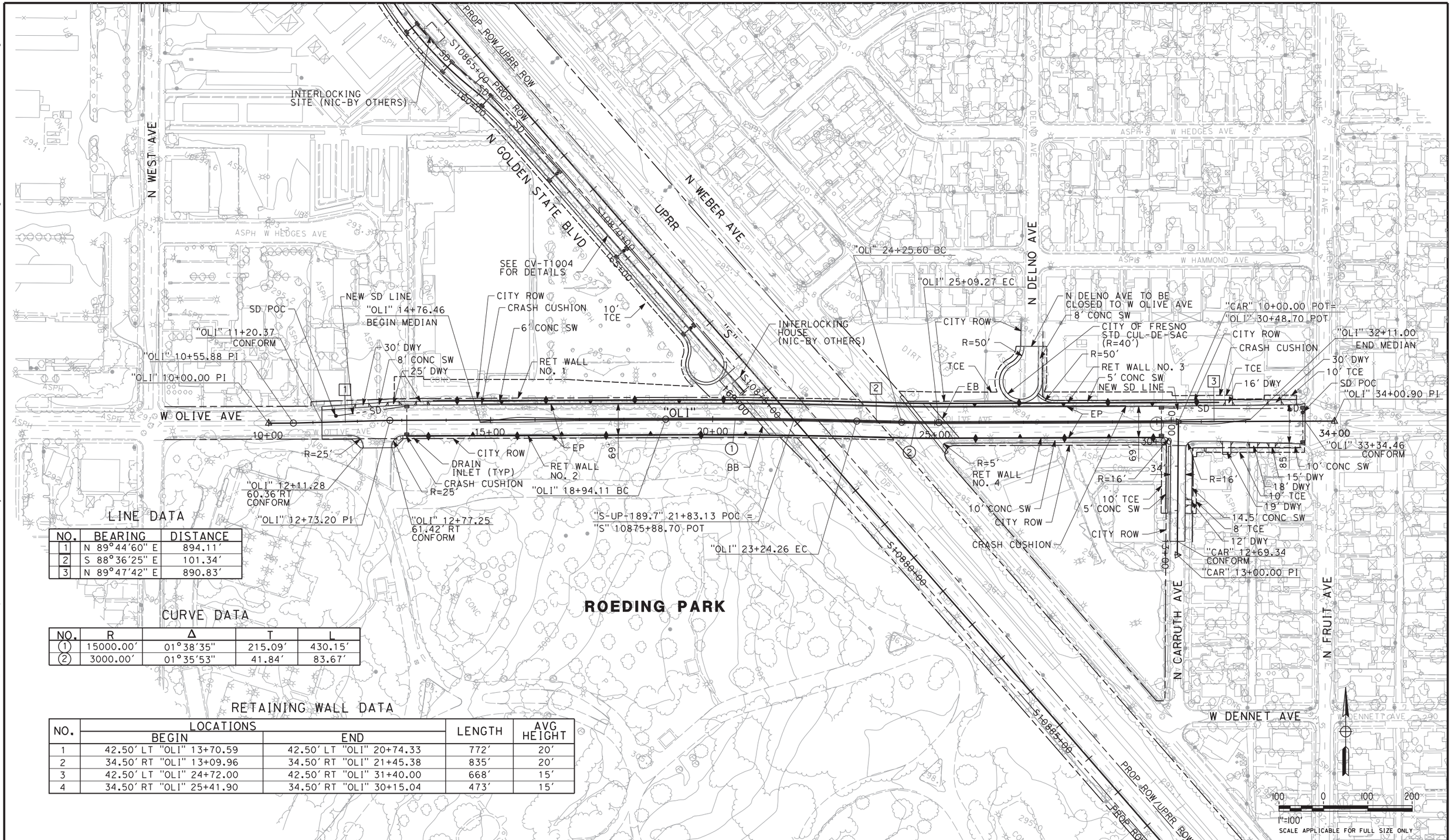

LINE DATA

NO.	BEARING	DISTANCE
1	N 89°44'60" E	894.11'
2	S 88°36'25" E	101.34'
3	N 89°47'42" E	890.83'

CURVE DATA

NO.	R	Δ	T	L
1	15000.00'	01°38'35"	215.09'	430.15'
2	3000.00'	01°35'53"	41.84'	83.67'

RETAINING WALL DATA

NO.	LOCATIONS		LENGTH	AVG HEIGHT
	BEGIN	END		
1	42.50' LT "OLI" 13+70.59	42.50' LT "OLI" 20+74.33	772'	20'
2	34.50' RT "OLI" 13+09.96	34.50' RT "OLI" 21+45.38	835'	20'
3	42.50' LT "OLI" 24+72.00	42.50' RT "OLI" 31+40.00	668'	15'
4	34.50' RT "OLI" 25+41.90	34.50' RT "OLI" 30+15.04	473'	15'

REV	DATE	BY	CHK	APP	DESCRIPTION

DESIGNED BY I. JOSIFEK
DRAWN BY V. ORTEGA
CHECKED BY B. RAWSON
IN CHARGE O. EARLE
DATE 02/17/12

PROPOSED PRELIMINARY DESIGN

NOT FOR CONSTRUCTION

URS | HMM | ARUP
CALIFORNIA HIGH-SPEED TRAIN

CALIFORNIA HIGH-SPEED RAIL AUTHORITY

CALIFORNIA HIGH-SPEED TRAIN PROJECT
SIERRA SUBDIVISION
PACKAGE 1A
ROADWAY
GRADE SEPARATION LAYOUT
W OLIVE AVE

CONTRACT NO.
DRAWING NO. CV-T1007
SCALE AS SHOWN
SHEET NO.

NET53329 2/15/2012 8:16:02 AM CAHSRP-R1.TBL CHSR_PDF_half_black.plt\SNA-DATA2\SNA_Project#$_Sacramento\URS\235413 CA HSR Fresno Palmdale\16.0 Drawings\S1 HSR06-0003\Sheet Files\Package#1\Civil\S1-0

NOTES:

1. FOR BRIDGE INFORMATION, SEE STRUCTURAL PLANS.
2. SIDEWALK PROFILE CONTROLLED BY ROADWAY PROFILE EXCEPT AS SHOWN.

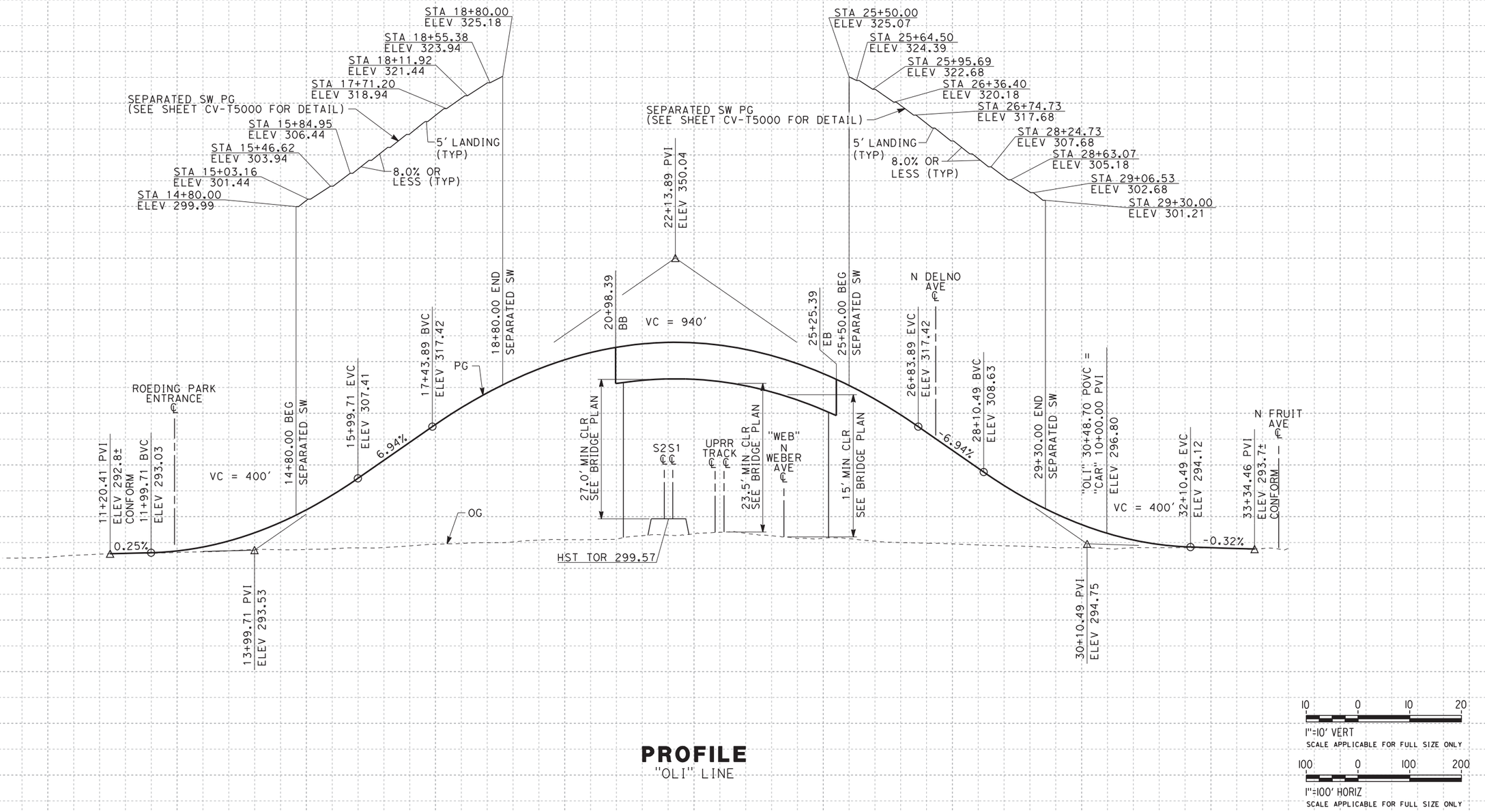

PROFILE

"OLI" LINE

REV	DATE	BY	CHK	APP	DESCRIPTION

DESIGNED BY I. JOSIFEK
DRAWN BY V. ORTEGA
CHECKED BY B. RAWSON
IN CHARGE O. EARLE
DATE 02/17/12

PROPOSED PRELIMINARY DESIGN

NOT FOR CONSTRUCTION

URS | HMM | ARUP
CALIFORNIA HIGH-SPEED TRAIN

CALIFORNIA HIGH-SPEED RAIL AUTHORITY

CALIFORNIA HIGH-SPEED TRAIN PROJECT
SIERRA SUBDIVISION
PACKAGE 1A
ROADWAY
GRADE SEPARATION PROFILE
W OLIVE AVE

CONTRACT NO.
DRAWING NO. CV-T1008
SCALE AS SHOWN
SHEET NO.

NET53329 2/15/2012 8:16:04 AM CAHSRP-R1.TBL CHSR_PDF_half_black.pl1 \\SNA-DATA2\SNA_Project$_Sacramento\URS\235413 CA HSR Fresno Palmdale\16.0 Drawings\S1 HSR06-0003\Sheet Files\Package#1\Civil\S1-0

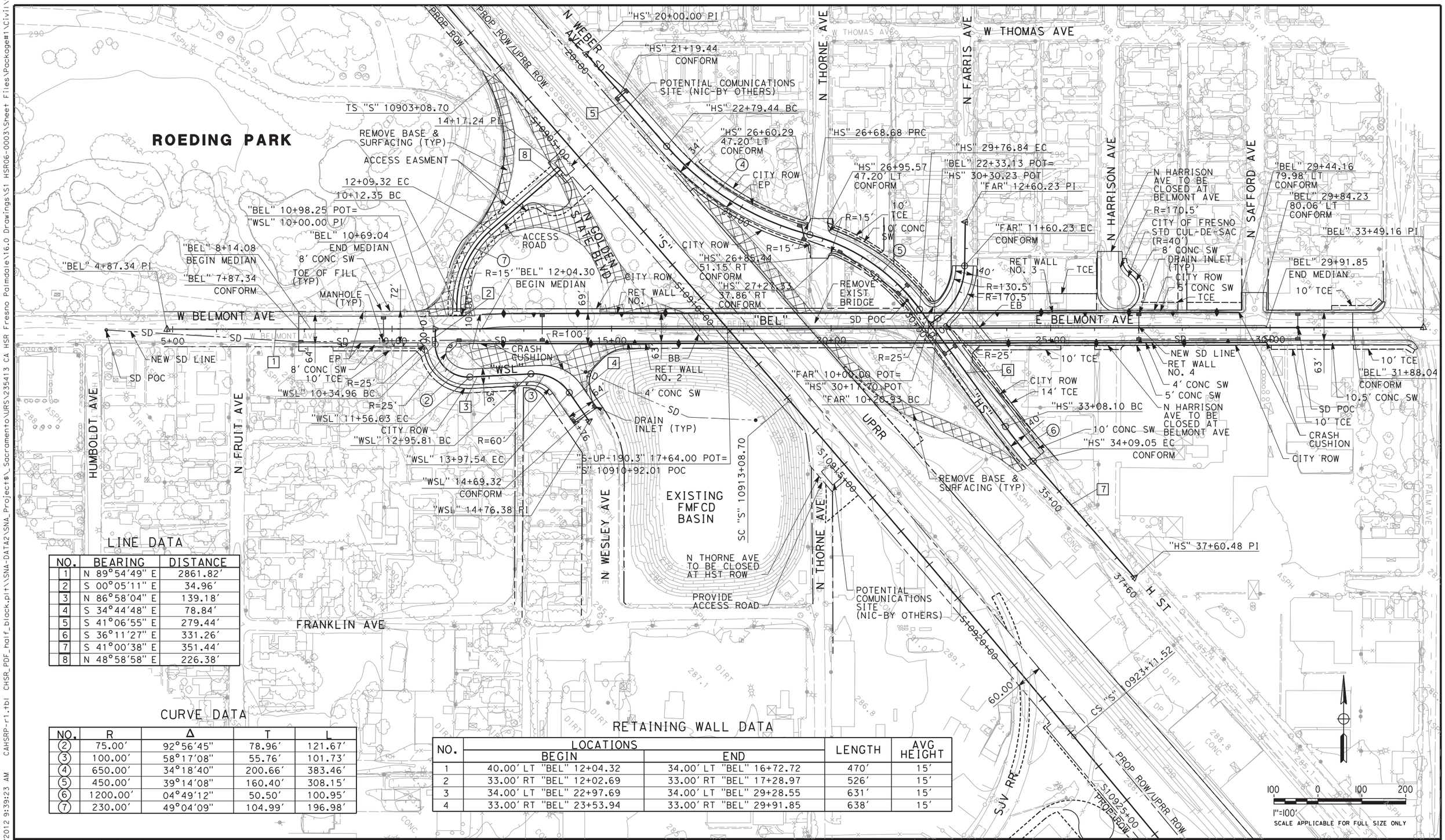

LINE DATA

NO.	BEARING	DISTANCE
1	N 89°54'49" E	2861.82'
2	S 00°05'11" E	34.96'
3	N 86°58'04" E	139.18'
4	S 34°44'48" E	78.84'
5	S 41°06'55" E	279.44'
6	S 36°11'27" E	331.26'
7	S 41°00'38" E	351.44'
8	N 48°58'58" E	226.38'

CURVE DATA

NO.	R	Δ	T	L
2	75.00'	92°56'45"	78.96'	121.67'
3	100.00'	58°17'08"	55.76'	101.73'
4	650.00'	34°18'40"	200.66'	383.46'
5	450.00'	39°14'08"	160.40'	308.15'
6	1200.00'	04°49'12"	50.50'	100.95'
7	230.00'	49°04'09"	104.99'	196.98'

RETAINING WALL DATA

NO.	LOCATIONS BEGIN	LOCATIONS END	LENGTH	AVG HEIGHT
1	40.00' LT "BEL" 12+04.32	34.00' LT "BEL" 16+72.72	470'	15'
2	33.00' RT "BEL" 12+02.69	33.00' RT "BEL" 17+28.97	526'	15'
3	34.00' LT "BEL" 22+97.69	34.00' LT "BEL" 29+28.55	631'	15'
4	33.00' RT "BEL" 23+53.94	33.00' RT "BEL" 29+91.85	638'	15'

REV	DATE	BY	CHK	APP	DESCRIPTION

DESIGNED BY I. JOSIFEK
DRAWN BY V. ORTEGA
CHECKED BY B. RAWSON
IN CHARGE Q. EARLE
DATE 02/17/12

PROPOSED PRELIMINARY DESIGN

NOT FOR CONSTRUCTION

URS | HMM | ARUP
CALIFORNIA HIGH-SPEED TRAIN

CALIFORNIA HIGH-SPEED RAIL AUTHORITY

CALIFORNIA HIGH-SPEED TRAIN PROJECT
SIERRA SUBDIVISION
PACKAGE 1A
ROADWAY
GRADE SEPARATION LAYOUT
BELMONT AVE

CONTRACT NO.
DRAWING NO. CV-T1009
SCALE AS SHOWN
SHEET NO.

NET53329 2/15/2012 9:39:23 AM CAHSRP-r1.tbl CHSR_PDF_half_black.plt\\SNA-DATA2\SNA_Project#$_Sacramento\URS\235413 CA HSR Fresno Palmdale\16.0 Drawings\S1 HSR06-0003\Sheet Files\Package#1\Civil\S1-0

NOTES:

1. FOR BRIDGE INFORMATION, SEE STRUCTURAL PLANS.

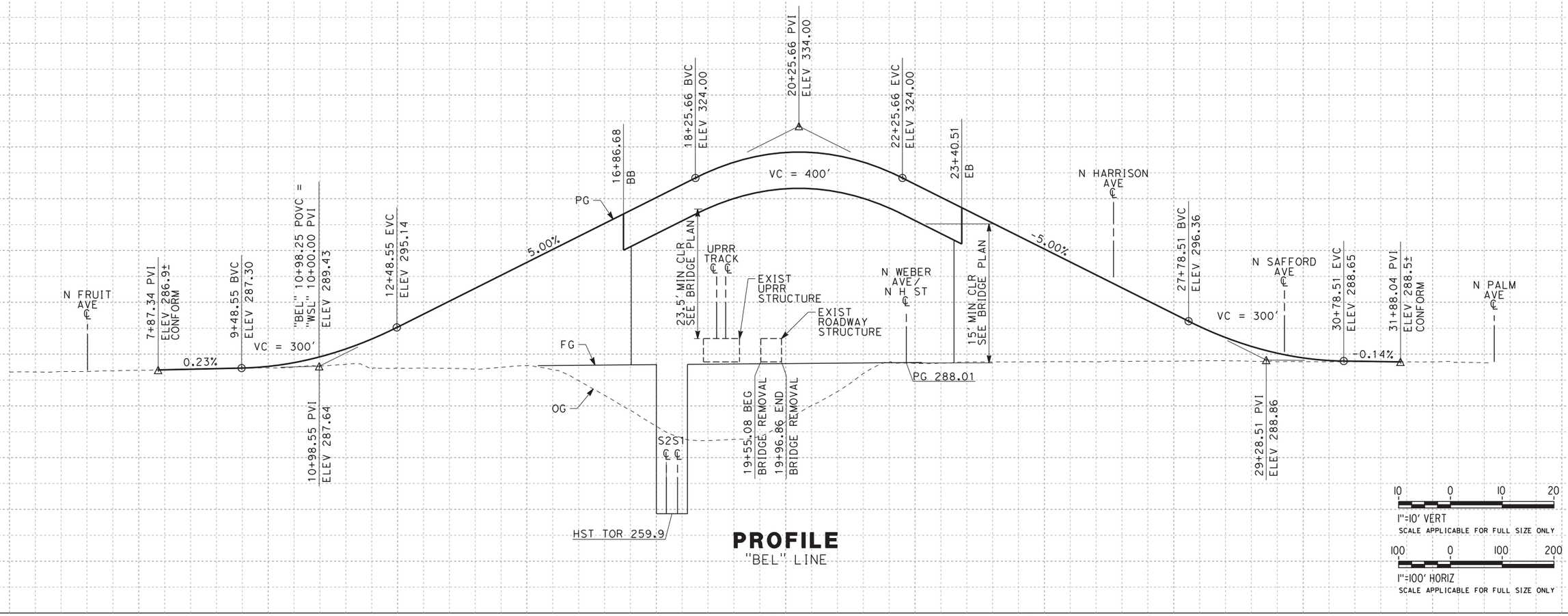

PROFILE

"BEL" LINE

REV	DATE	BY	CHK	APP	DESCRIPTION

DESIGNED BY I. JOSIFEK
DRAWN BY V. ORTEGA
CHECKED BY B. RAWSON
IN CHARGE O. EARLE
DATE 02/17/12

PROPOSED PRELIMINARY DESIGN

NOT FOR CONSTRUCTION

URS | HMM | ARUP
CALIFORNIA HIGH-SPEED TRAIN

CALIFORNIA HIGH-SPEED RAIL AUTHORITY

CALIFORNIA HIGH-SPEED TRAIN PROJECT
SIERRA SUBDIVISION
PACKAGE 1A
ROADWAY
GRADE SEPARATION PROFILE
BELMONT AVE

CONTRACT NO.
DRAWING NO. CV-T1010
SCALE AS SHOWN
SHEET NO.

NET53329 2/15/2012 8:16:10 AM CAHSRP-R1.TBL CHSR_PDF_half_black.plt\\SNA-DATA2\SNA_Project$_Sacramento\URS\235413 CA HSR Fresno Palmdale\16.0 Drawings\S1 HSR06-0003\Sheet Files\Package#1\Civil\S1-0

NOTES:

1. FOR BRIDGE INFORMATION, SEE STRUCTURAL PLANS.

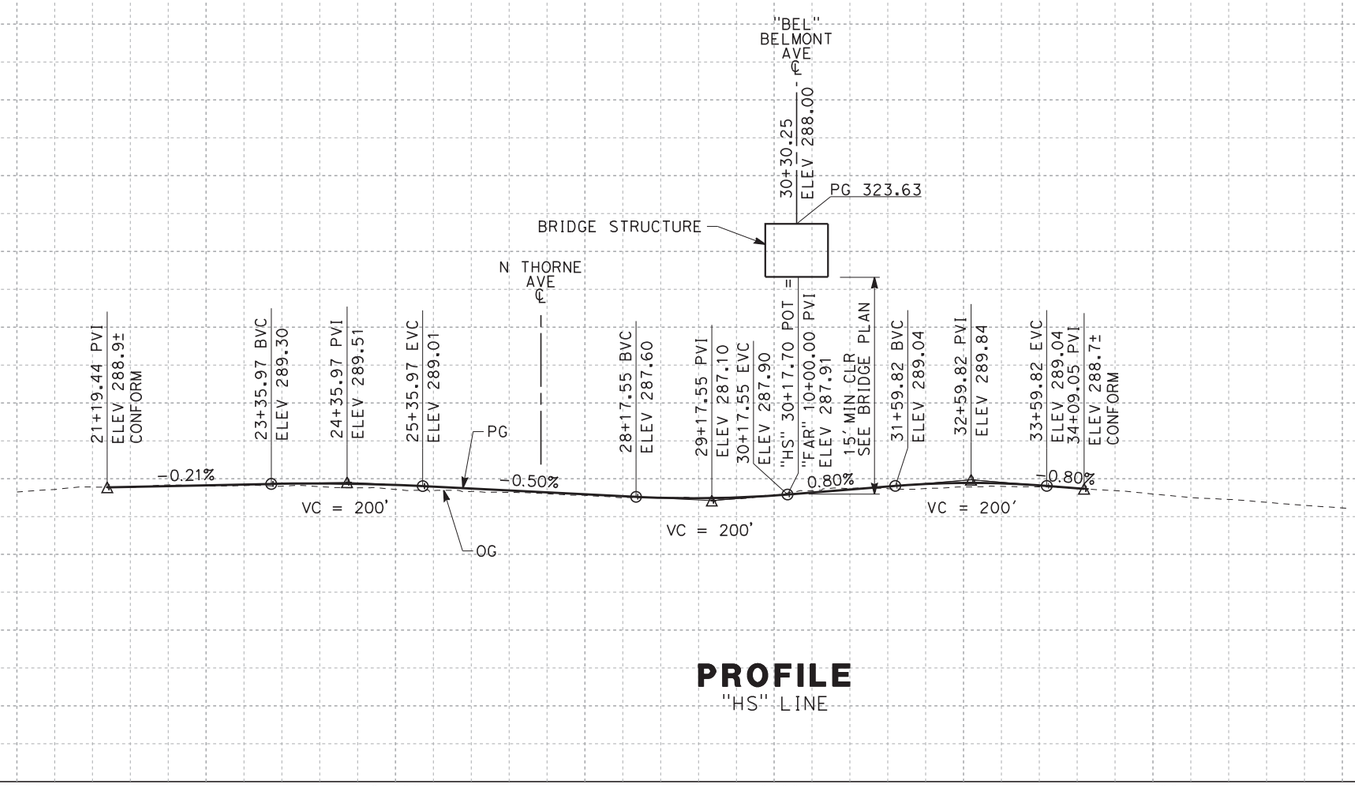

PROFILE
"HS" LINE

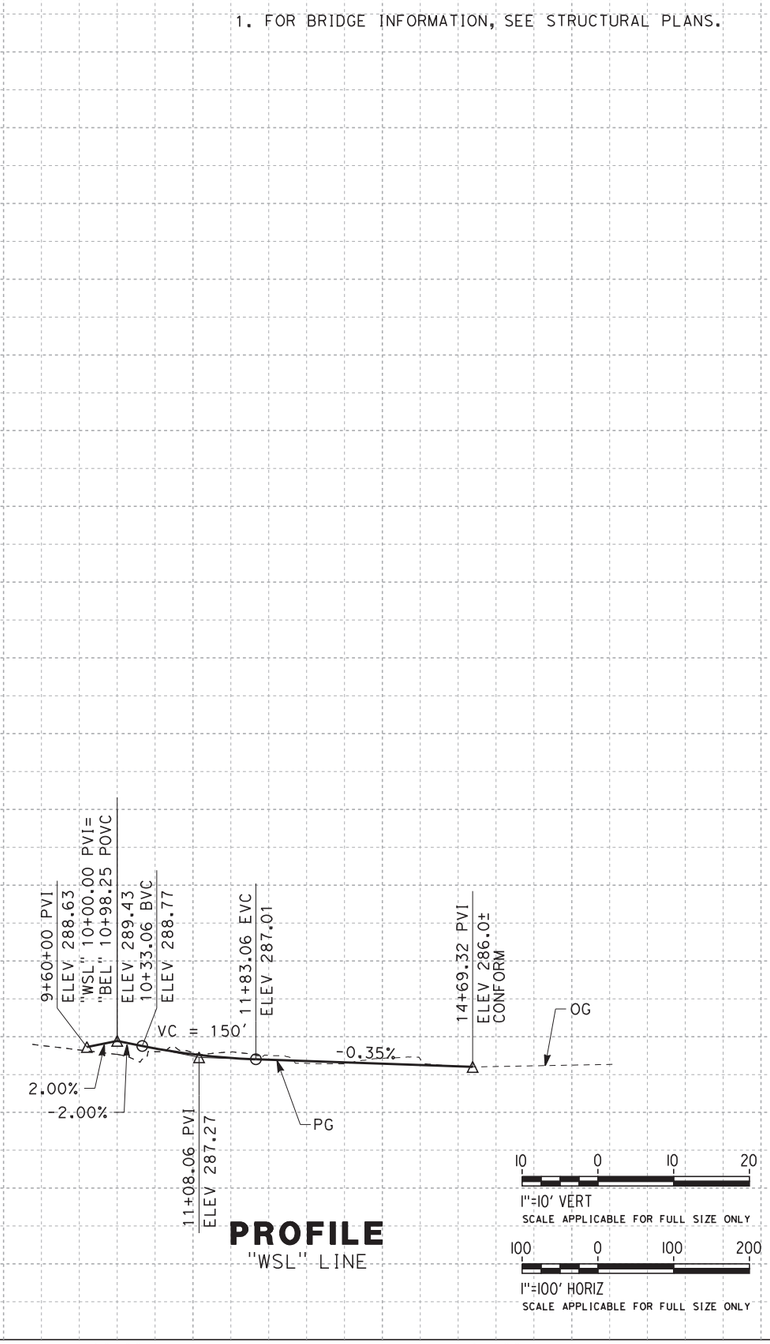

PROFILE
"WSL" LINE

10 0 10 20
1"=10' VERT
SCALE APPLICABLE FOR FULL SIZE ONLY

100 0 100 200
1"=100' HORIZ
SCALE APPLICABLE FOR FULL SIZE ONLY

REV	DATE	BY	CHK	APP	DESCRIPTION

DESIGNED BY I. JOSIFEK
DRAWN BY V. ORTEGA
CHECKED BY B. RAWSON
IN CHARGE Q. EARLE
DATE 02/17/12

PROPOSED PRELIMINARY DESIGN

NOT FOR CONSTRUCTION

URS | HMM | ARUP
CALIFORNIA HIGH-SPEED TRAIN

CALIFORNIA
HIGH-SPEED RAIL AUTHORITY

CALIFORNIA HIGH-SPEED TRAIN PROJECT
SIERRA SUBDIVISION
PACKAGE 1A
ROADWAY
GRADE SEPARATION PROFILE
N H ST/N WESLEY AVE

CONTRACT NO.
DRAWING NO. CV-T1011
SCALE AS SHOWN
SHEET NO.

NET53329 2/15/2012 8:16:11 AM CAHSRP-R1.TBL CHSR_PDF_half_black.plt \\SNA-DATA2\SNA_Project$_Sacramento\URS\235413 CA HSR Fresno Palmdale\16.0 Drawings\S1 HSR06-0003\Sheet Files\Package#1\Civil\S1-0

NOTES:

1. FOR BRIDGE INFORMATION, SEE STRUCTURAL PLANS.

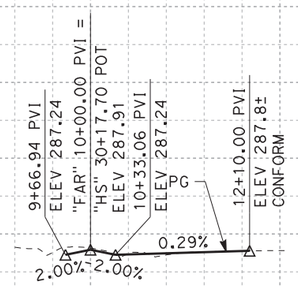

PROFILE
"FAR" LINE

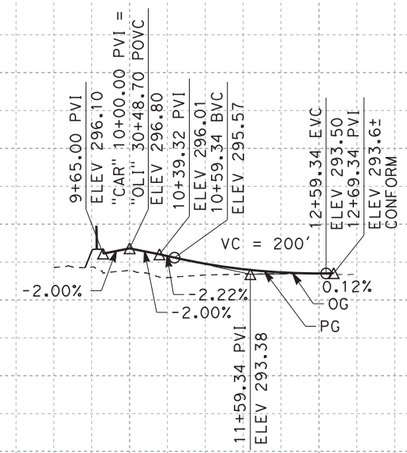

PROFILE
"CAR" LINE

10 0 10 20
1"=10' VERT
SCALE APPLICABLE FOR FULL SIZE ONLY

100 0 100 200
1"=100' HORIZ
SCALE APPLICABLE FOR FULL SIZE ONLY

350 340 330 320 310 300 290 280 270 260 250 240

5+00 10+00 15+00 5+00 10+00 15+00

REV	DATE	BY	CHK	APP	DESCRIPTION

DESIGNED BY I. JOSIFEK
DRAWN BY V. ORTEGA
CHECKED BY B. RAWSON
IN CHARGE O. EARLE
DATE 02/17/12

PROPOSED PRELIMINARY DESIGN

NOT FOR CONSTRUCTION

URS | HMM | ARUP
CALIFORNIA HIGH-SPEED TRAIN

CALIFORNIA HIGH-SPEED RAIL AUTHORITY

CALIFORNIA HIGH-SPEED TRAIN PROJECT
SIERRA SUBDIVISION
PACKAGE 1A
ROADWAY
GRADE SEPARATION PROFILE
N CARUTH AVE/N FARRIS AVE

CONTRACT NO.
DRAWING NO. CV-T1012
SCALE AS SHOWN
SHEET NO.

NET53329 2/15/2012 8:16:11 AM CAHSRP-R1.TBL CHSR_PDF_half_black.plt\\SNA-DATA2\SNA_Projects$_Sacramento\URS\235413 CA HSR Fresno Palmdale\16.0 Drawings\S1 HSR06-0003\Sheet Files\Package#1\Civil\S1-0

LINE DATA

NO.	BEARING	DISTANCE
3	N 00°00'00" E	207.32'

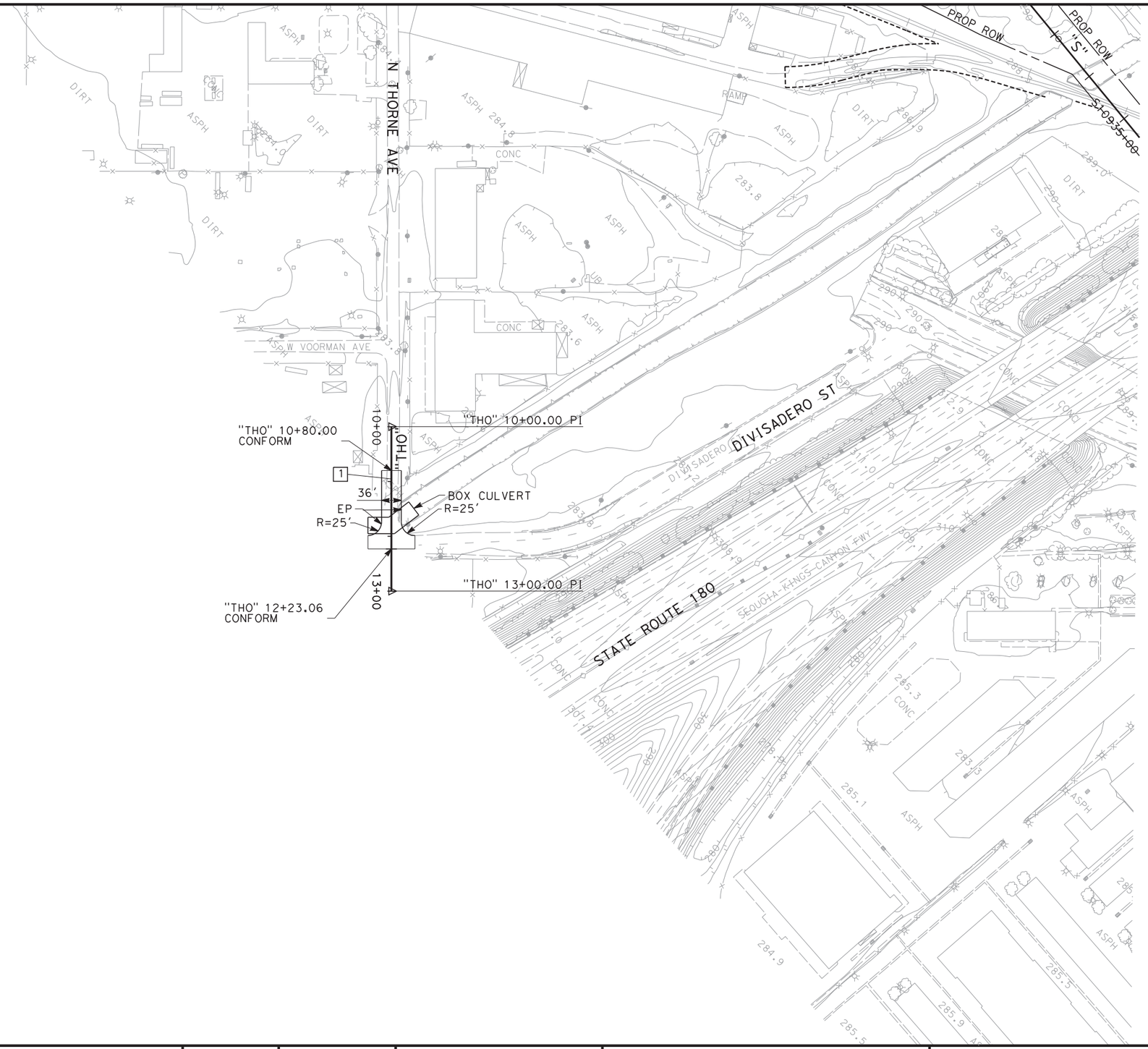

NOTES:

1. BOX CULVERT TO BE REPLACED "IN-KIND".
2. SUBJECT TO APPROVAL BY CITY OF FRESNO AND FRESNO IRRIGATION DISTRICT.

100 0 100 200

1"=100'

SCALE APPLICABLE FOR FULL SIZE ONLY

REV	DATE	BY	CHK	APP	DESCRIPTION

DESIGNED BY J. NETTLETON
DRAWN BY V. ORTEGA
CHECKED BY B. RAWSON
IN CHARGE Q. EARLE
DATE 12/08/11

PROPOSED PRELIMINARY DESIGN

NOT FOR CONSTRUCTION

URS | HMM | ARUP
CALIFORNIA HIGH-SPEED TRAIN

CALIFORNIA
HIGH-SPEED RAIL AUTHORITY

CALIFORNIA HIGH-SPEED TRAIN PROJECT
SIERRA SUBDIVISION
PACKAGE 1A
ROADWAY
ROADWAY LAYOUT
N THORNE AVE

CONTRACT NO.
DRAWING NO. CV-R1001-THN
SCALE AS SHOWN
SHEET NO.

DEA54595 12/1/2011 3:42:20 PM CAHSRP-r1.tbl CHSR_PDF_half_black.pltG:_Sacramento\URS\235413 CA HSR Fresno Palmdale\16.0 Drawings\S1 HSR06-0003\Sheet Files\Package#1\Civil\S1-CV-R1001-THN.dgn

DEA54595 12/1/2011 3:59:49 PM CAHSRP-r1.tbl CHSR_PDF_half_black.pltG:_Sacramento\URS\235413 CA HSR Fresno Palmdale\16.0 Drawings\S1 HSR06-0003\Sheet Files\Package#1\Civil\S1-CV-R1002-THN.dgn

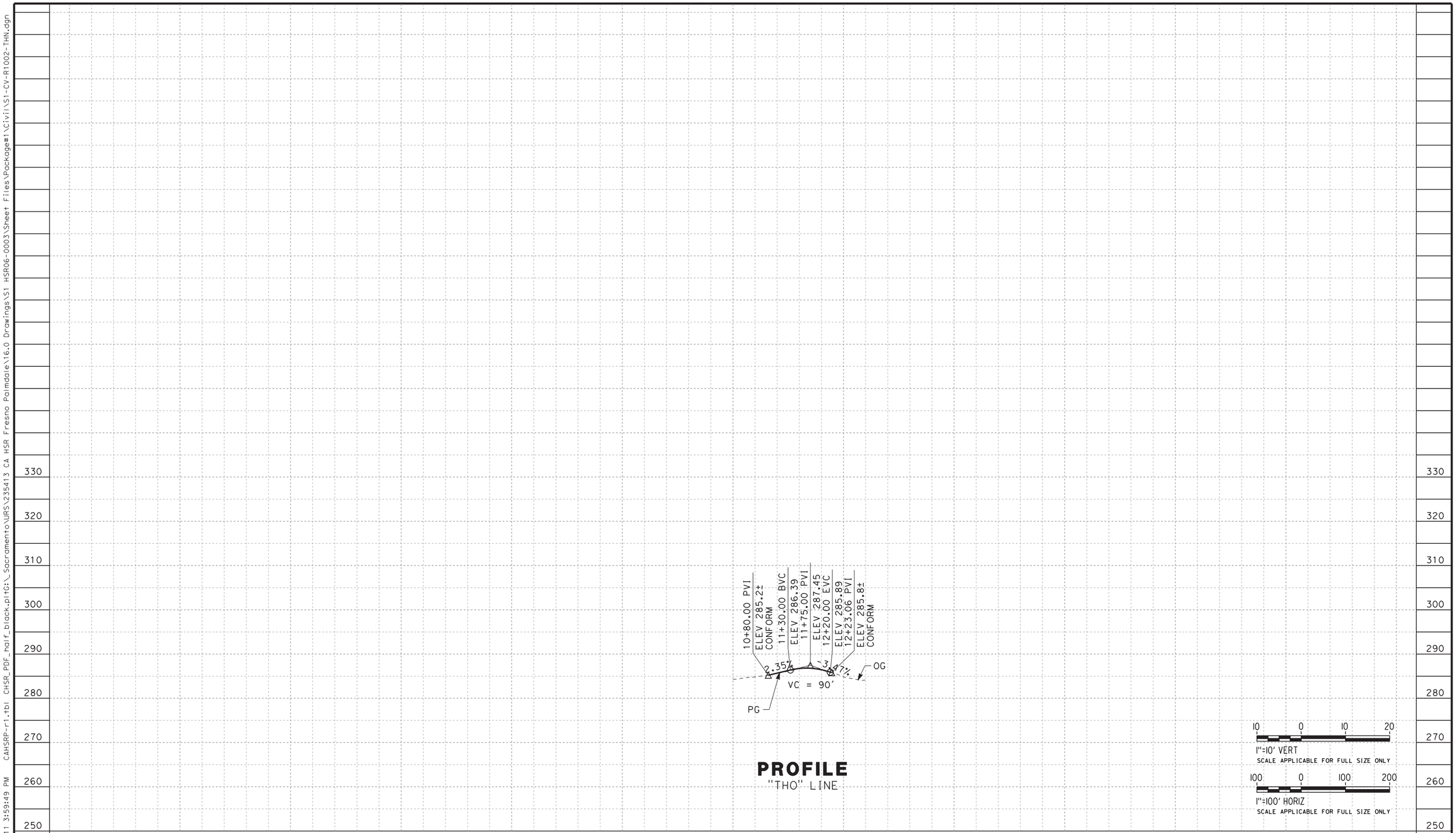

PROFILE

"THO" LINE

REV	DATE	BY	CHK	APP	DESCRIPTION

DESIGNED BY J. NETTLETON
DRAWN BY V. ORTEGA
CHECKED BY B. RAWSON
IN CHARGE Q. EARLE
DATE 12/08/11

PROPOSED PRELIMINARY DESIGN

NOT FOR CONSTRUCTION

URS | HMM | ARUP
CALIFORNIA HIGH-SPEED TRAIN

CALIFORNIA HIGH-SPEED RAIL AUTHORITY

CALIFORNIA HIGH-SPEED TRAIN PROJECT
SIERRA SUBDIVISION
PACKAGE 1A
ROADWAY
GRADE SEPARATION PROFILE
N THORNE AVE

CONTRACT NO.
DRAWING NO. CV-R1002-THN
SCALE AS SHOWN
SHEET NO.

NET53329 2/15/2012 8:16:17 AM CAHSRP-R1.TBL CHSR_PDF_half_black.plt\\SNA-DATA2\SNA_Project$_Sacramento\URS\235413 CA HSR Fresno Palmdale\16.0 Drawings\S1 HSR06-0003\Sheet Files\Package#1\Civil\S1-0

"MCK" 25+95.30 TO 28+15.30

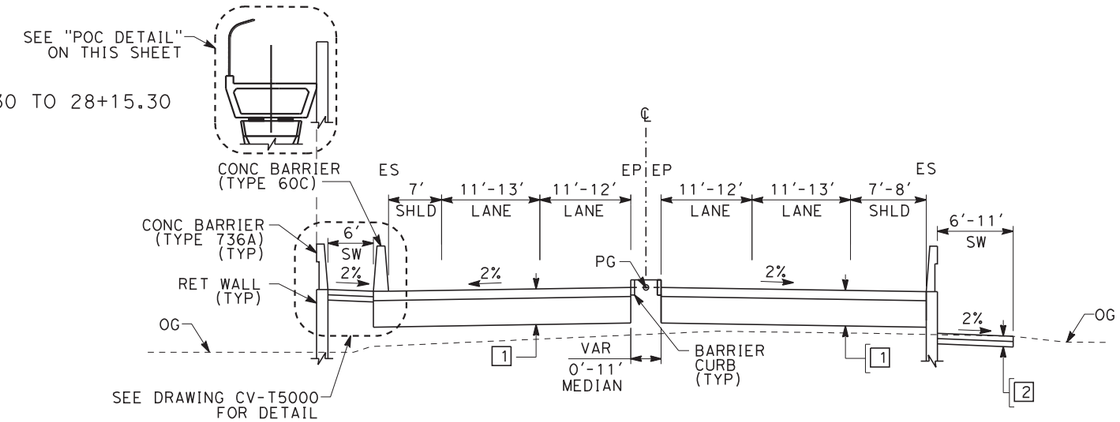

W MCKINLEY AVE

"MCK" 18+23.08 TO 22+41.57
"MCK" 26+61.32 TO 28+13.80

"MCK" 28+13.80 TO 30+70.00

"MCK" 16+75.00 TO 18+23.08

"MCK" 15+73.32 TO 16+75.00

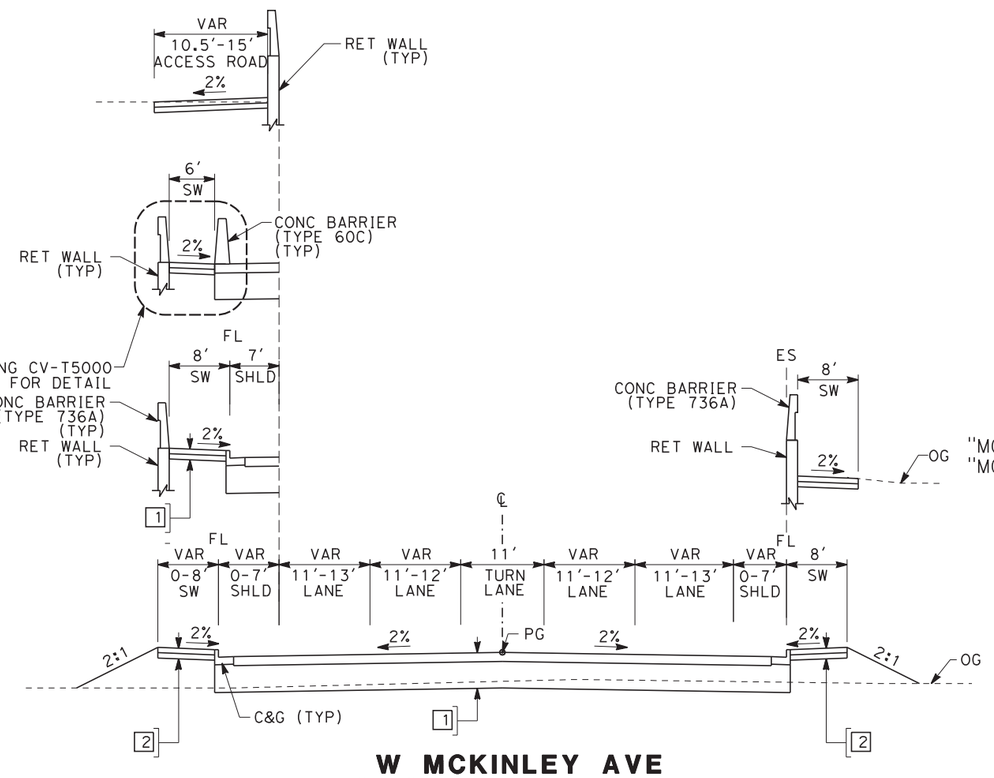

W MCKINLEY AVE

"MCK" 14+10.00 TO 18+23.08
"MCK" 28+13.80 TO 31+39.23*

NOTES:

1. SUPERELEVATION AS SHOWN OR AS DIRECTED BY THE ENGINEER.
2. PAVEMENT SECTIONS ARE SHOWN FOR INFORMATIONAL PURPOSES ONLY.

DESIGN SPEED TABLE

STREET NAME	ALIGNMENT DESIGNATION	DESIGN SPEED (MPH)
W MCKINLEY AVE	MCK	30
W OLIVE AVE	OLI	35
BELMONT AVE	BEL	30
MCKINLEY AVE CONNECTOR	MCC	30
N GOLDEN STATE BLVD	GSB	50
N WEBER AVE	WEB	40
N H ST	HS	35
N WESLEY AVE	WSL	<20
N WEST AVE	WES	30
N CARUTH AVE	CAR	30
N FARRIS AVE	FAR	30

STRUCTURAL SECTIONS
TYPICAL ROADWAY

1 — 0.50' HMA (TYPE A)
1.50' CL2 AB

2 — 0.35' PCC
0.35' CL2 AB

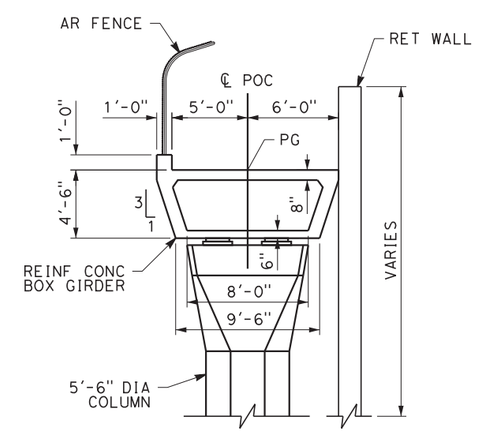

POC DETAIL

NO SCALE

*PROVIDE E.B. RIGHT TURN LANE
FROM STA 30+50.00 TO 31+39.23

10 0 10 20
1"=10'
SCALE APPLICABLE FOR FULL SIZE ONLY

REV	DATE	BY	CHK	APP	DESCRIPTION

DESIGNED BY I. JOSIFEK
DRAWN BY V. ORTEGA
CHECKED BY B. RAWSON
IN CHARGE Q. EARLE
DATE 02/17/12

PROPOSED PRELIMINARY DESIGN

NOT FOR CONSTRUCTION

URS | HMM | ARUP
CALIFORNIA HIGH-SPEED TRAIN

CALIFORNIA HIGH-SPEED RAIL AUTHORITY

CALIFORNIA HIGH-SPEED TRAIN PROJECT
SIERRA SUBDIVISION
PACKAGE 1A
ROADWAY
ROADWAY / GRADE SEPARATION
TYPICAL SECTIONS

CONTRACT NO.
DRAWING NO. CV-T3001
SCALE AS SHOWN
SHEET NO.

STRUCTURAL SECTIONS
TYPICAL ROADWAY

1 — 0.50' HMA (TYPE A)
1.50' CL2 AB

2 — 0.35' PCC
0.35' CL2 AB

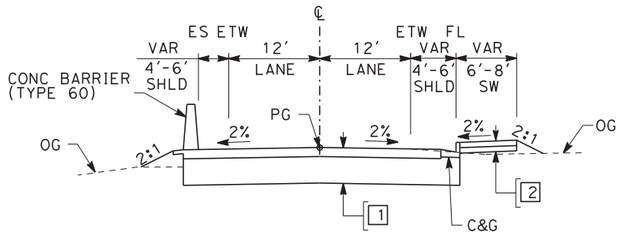

N GOLDEN STATE BLVD
"GSB" 125+00.00 TO 167+16.56

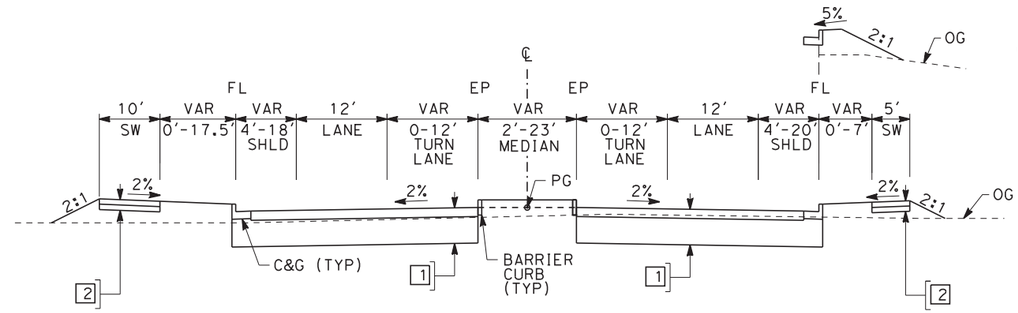

"WES" 16+92.57 TO 20+13.60

N WEST AVE
"WES" 15+00.00 TO 20+13.60

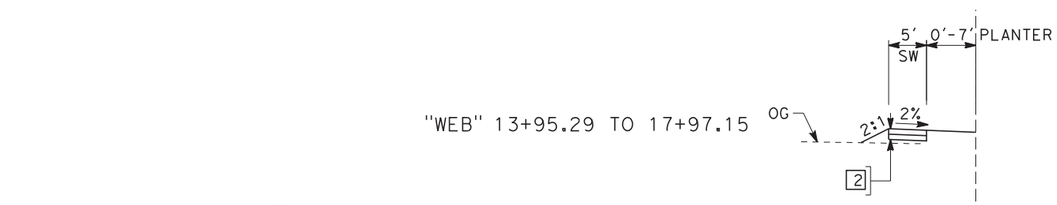

"WEB" 13+95.29 TO 17+97.15

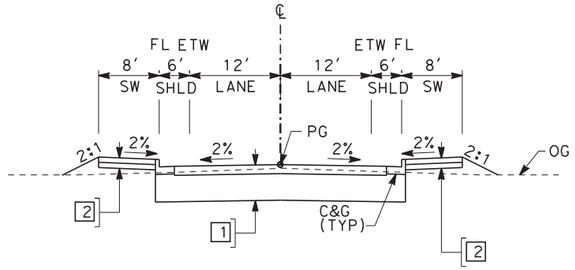

MCKINLEY AVE CONNECTOR
"MCC" 9+29.46 TO 15+96.13

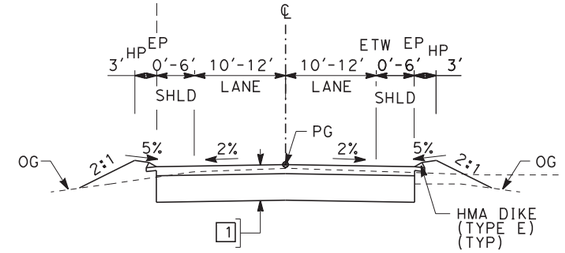

N WEBER AVE
"WEB" 13+25.00 TO 18+75.00

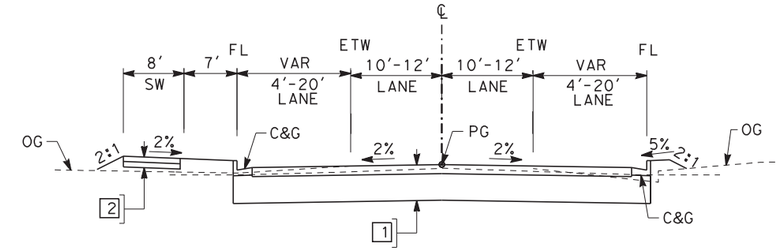

N WEBER AVE
"WEB" 21+07.03 TO 23+50.54

10 0 10 20
1"=10'
SCALE APPLICABLE FOR FULL SIZE ONLY

REV	DATE	BY	CHK	APP	DESCRIPTION

DESIGNED BY I. JOSIFEK
DRAWN BY V. ORTEGA
CHECKED BY B. RAWSON
IN CHARGE Q. EARLE
DATE 02/17/12

PROPOSED PRELIMINARY DESIGN

NOT FOR CONSTRUCTION

URS | HMM | ARUP
CALIFORNIA HIGH-SPEED TRAIN

CALIFORNIA HIGH-SPEED RAIL AUTHORITY

CALIFORNIA HIGH-SPEED TRAIN PROJECT
SIERRA SUBDIVISION
PACKAGE 1A
ROADWAY
ROADWAY / GRADE SEPARATION
TYPICAL SECTIONS

CONTRACT NO.
DRAWING NO. CV-T3002
SCALE AS SHOWN
SHEET NO.

NET53329 2/15/2012 9:43:33 AM CAHSRP-r1.tbl CHSR_PDF_half_black.plt \\SNA-DATA2\SNA_Project#$_Sacramento\URS\235413 CA HSR Fresno Palmdale\16.0 Drawings\S1 HSR06-0003\Sheet Files\Package#1\Civil\S1-0

STRUCTURAL SECTIONS
TYPICAL ROADWAY

1 — 0.50' HMA (TYPE A)
1.50' CL2 AB

2 — 0.35' PCC
0.35' CL2 AB

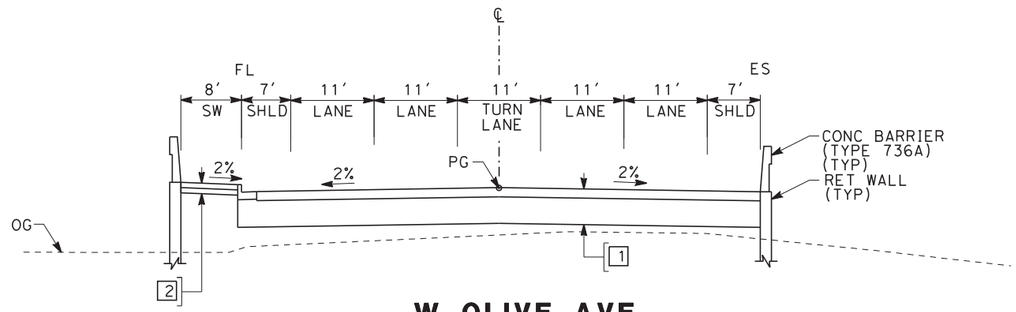

W OLIVE AVE
"OLI" 13+09.96 TO 14+80.16

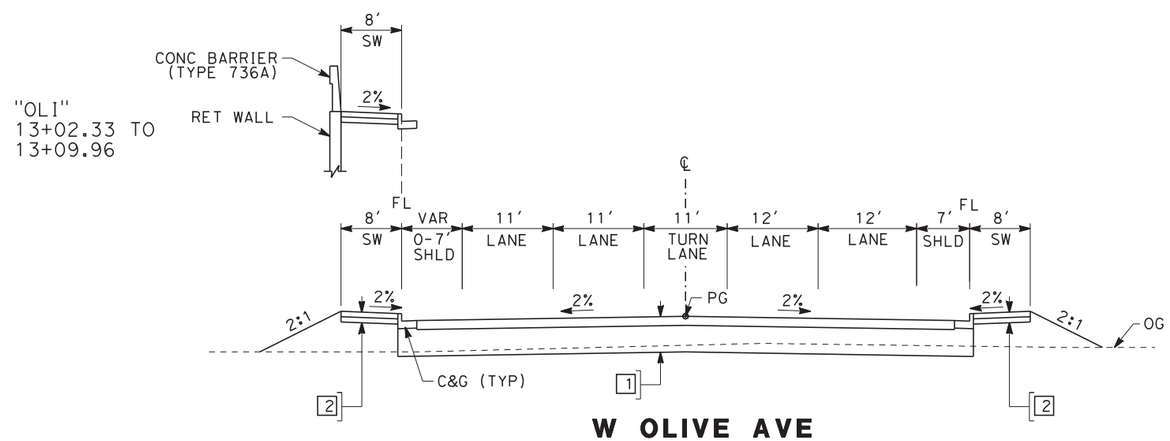

W OLIVE AVE
"OLI" 11+20.41 TO 13+09.96

10 0 10 20
1"=10'
SCALE APPLICABLE FOR FULL SIZE ONLY

REV	DATE	BY	CHK	APP	DESCRIPTION

DESIGNED BY I. JOSIFEK
DRAWN BY V. ORTEGA
CHECKED BY B. RAWSON
IN CHARGE Q. EARLE
DATE 02/17/12

PROPOSED PRELIMINARY DESIGN

NOT FOR CONSTRUCTION

URS | HMM | ARUP
CALIFORNIA HIGH-SPEED TRAIN

CALIFORNIA HIGH-SPEED RAIL AUTHORITY

CALIFORNIA HIGH-SPEED TRAIN PROJECT
SIERRA SUBDIVISION
PACKAGE 1A
ROADWAY
ROADWAY / GRADE SEPARATION
TYPICAL SECTIONS

CONTRACT NO.
DRAWING NO. CV-T3003
SCALE AS SHOWN
SHEET NO.

NET53329 2/15/2012 8:16:18 AM CAHSRP-R1.TBL CHSR_PDF_half_black.plt\\SNA-DATA2\SNA_Project$_Sacramento\URS\235413 CA HSR Fresno Palmdale\16.0 Drawings\S1 HSR06-0003\Sheet Files\Package#1\Civil\S1-0

STRUCTURAL SECTIONS
TYPICAL ROADWAY

1 — 0.50' HMA (TYPE A)
1.50' CL2 AB

2 — 0.35' PCC
0.35' CL2 AB

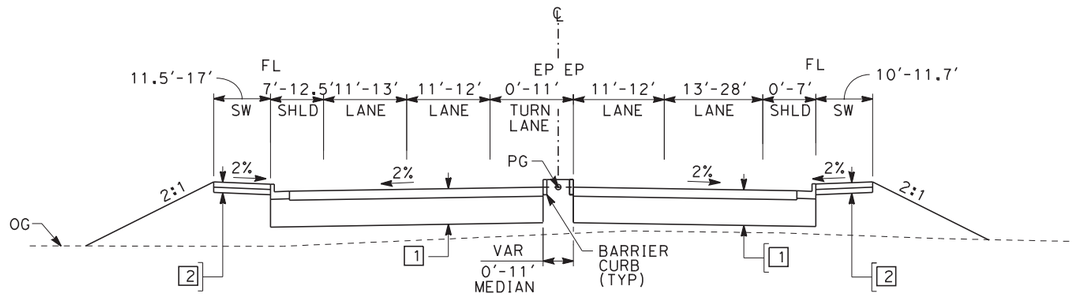

W OLIVE AVE
"OLI" 30+15.04 TO 33+34.46

"OLI" 29+30.00 TO 30+00.00

"OLI" 25+10.81 TO 30+15.04

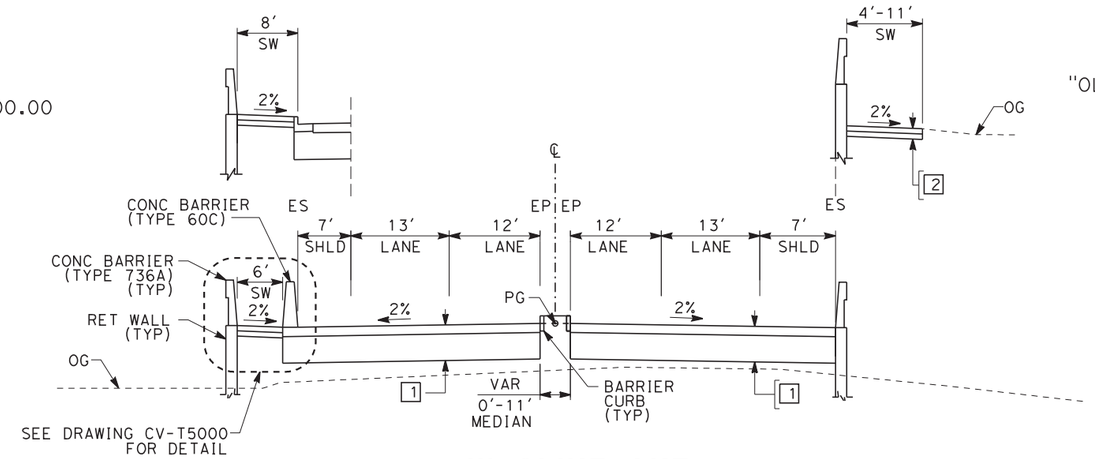

W OLIVE AVE
"OLI" 14+80.16 TO 20+98.39
"OLI" 25+25.39 TO 30+15.04

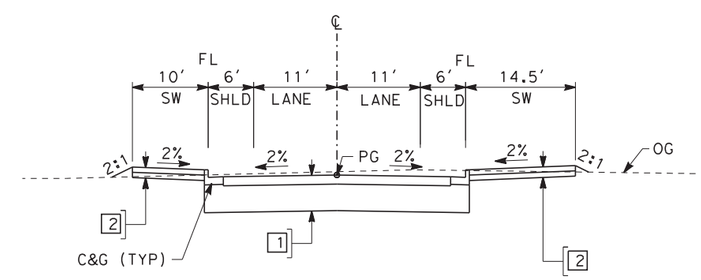

N CARRUTH AVE
"CAR" 10+00.00 TO 11+23.92

10 0 10 20
1"=10'
SCALE APPLICABLE FOR FULL SIZE ONLY

REV	DATE	BY	CHK	APP	DESCRIPTION

DESIGNED BY I. JOSIFEK
DRAWN BY V. ORTEGA
CHECKED BY B. RAWSON
IN CHARGE O. EARLE
DATE 02/17/12

PROPOSED PRELIMINARY DESIGN

NOT FOR CONSTRUCTION

URS | HMM | ARUP
CALIFORNIA HIGH-SPEED TRAIN

CALIFORNIA HIGH-SPEED RAIL AUTHORITY

CALIFORNIA HIGH-SPEED TRAIN PROJECT
SIERRA SUBDIVISION
PACKAGE 1A
ROADWAY
ROADWAY / GRADE SEPARATION
TYPICAL SECTIONS

CONTRACT NO.
DRAWING NO. CV-T3004
SCALE AS SHOWN
SHEET NO.

NET53329 2/15/2012 8:16:19 AM CAHSRP-R1.TBL CHSR_PDF_half_black.pl1\\SNA-DATA2\SNA_Project$_Sacramento\URS\235413 CA HSR Fresno Palmdale\16.0 Drawings\S1 HSR06-0003\Sheet Files\Package#1\Civil\S1-0

NET53329 2/15/2012 8:16:20 AM CAHSRP-R1.TBL CHSR_PDF_half_black.pl+\\SNA-DATA2\SNA_Project$_Sacramento\URS\235413 CA HSR Fresno Palmdale\16.0 Drawings\S1 HSR06-0003\Sheet Files\Package#1\Civil\S1-0

STRUCTURAL SECTIONS
TYPICAL ROADWAY

[1] 0.50' HMA (TYPE A)
1.50' CL2 AB

[2] 0.35' PCC
0.35' CL2 AB

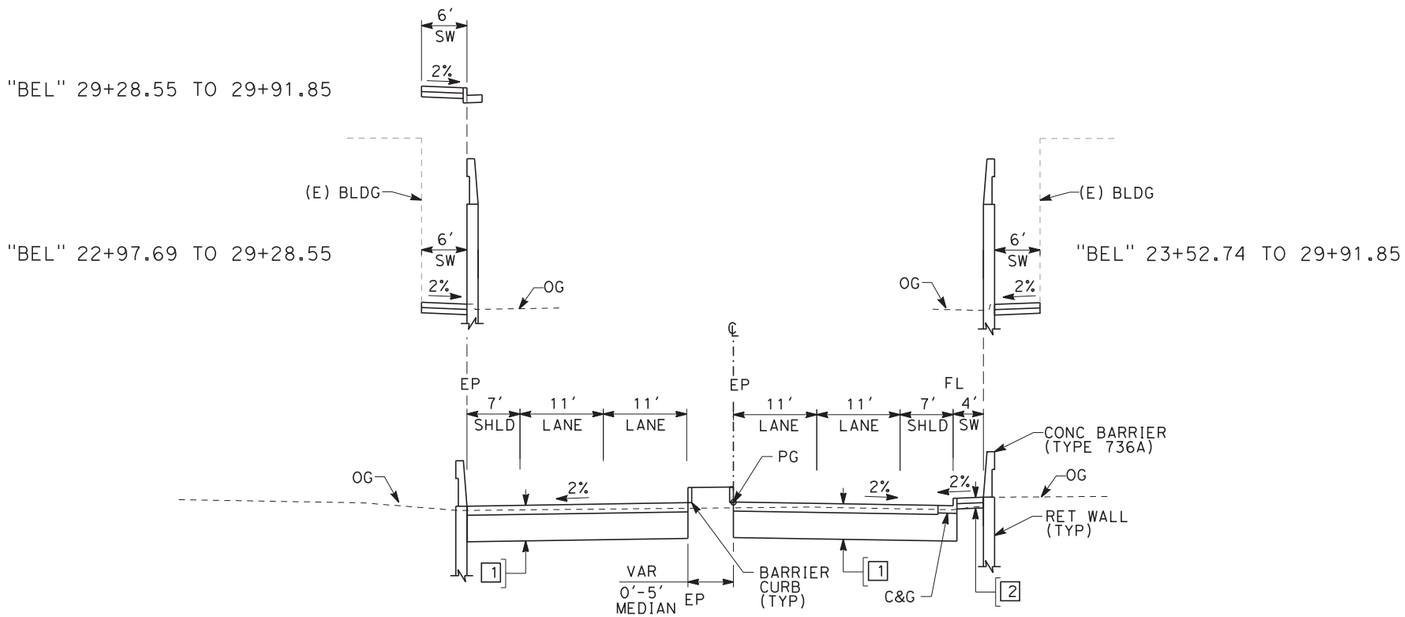

W BELMONT AVE
"BEL" 12+04.32 TO 16+86.68
"BEL" 23+40.51 TO 29+91.85

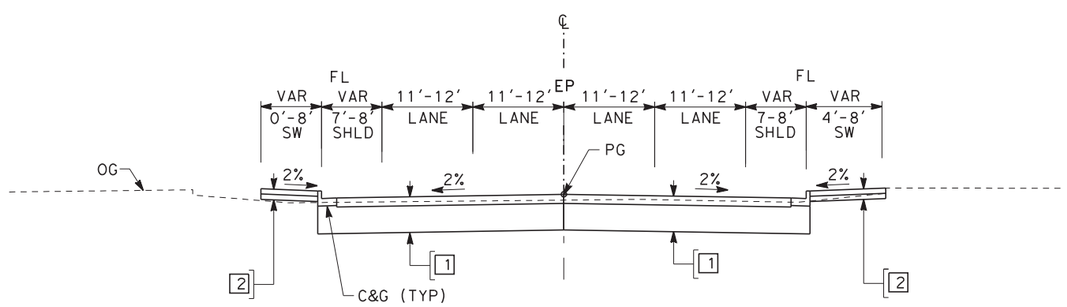

W BELMONT AVE
"BEL" 7+87.34 TO 12+04.32

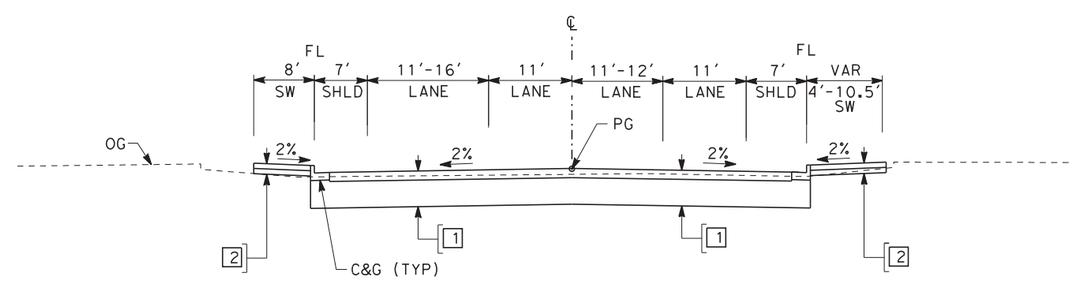

W BELMONT AVE
"BEL" 29+91.85 TO 31+88.04

10 0 10 20
1"=10'
SCALE APPLICABLE FOR FULL SIZE ONLY

REV	DATE	BY	CHK	APP	DESCRIPTION

DESIGNED BY I. JOSIFEK
DRAWN BY V. ORTEGA
CHECKED BY B. RAWSON
IN CHARGE O. EARLE
DATE 02/17/12

PROPOSED PRELIMINARY DESIGN

NOT FOR CONSTRUCTION

URS | HMM | ARUP
CALIFORNIA HIGH-SPEED TRAIN

CALIFORNIA HIGH-SPEED RAIL AUTHORITY

CALIFORNIA HIGH-SPEED TRAIN PROJECT
SIERRA SUBDIVISION
PACKAGE 1A
ROADWAY
ROADWAY / GRADE SEPARATION
TYPICAL SECTIONS

CONTRACT NO.
DRAWING NO. CV-T3005
SCALE AS SHOWN
SHEET NO.

STRUCTURAL SECTIONS
TYPICAL ROADWAY

1 — 0.50' HMA (TYPE A)
1.50' CL2 AB

2 — 0.35' PCC
0.35' CL2 AB

"HS" 27+16.09 TO 34+09.05

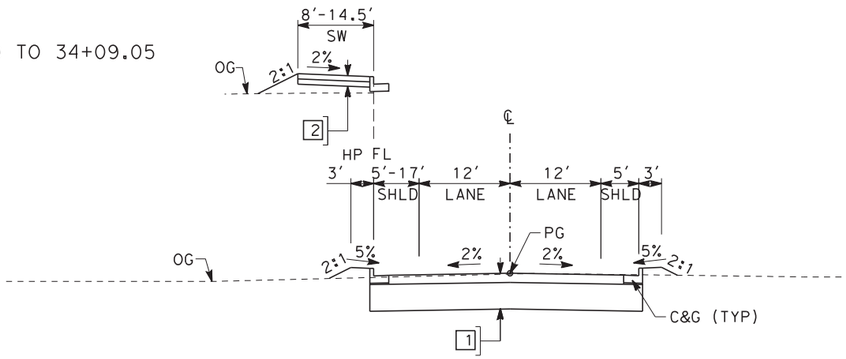

H ST
"HS" 21+19.44 TO 34+09.05

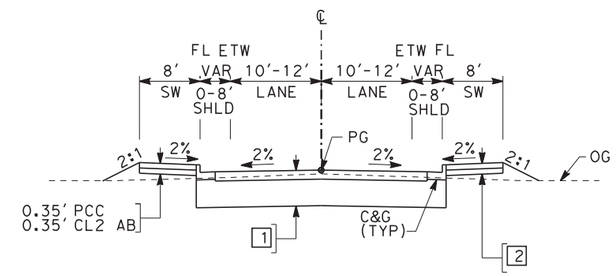

N THORNE AVE
"THO" 10+00.00 TO 12+23.06

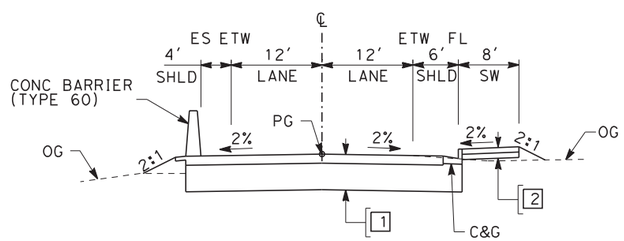

N WESLEY AVE
"WSL" 10+00.00 TO 14+69.32

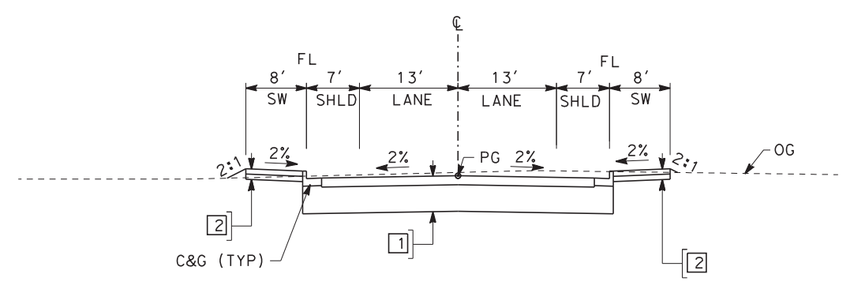

N FARRIS AVE
"FAR" 10+00.00 TO 11+60.23

10 0 10 20
1"=10'
SCALE APPLICABLE FOR FULL SIZE ONLY

REV	DATE	BY	CHK	APP	DESCRIPTION

DESIGNED BY I. JOSIFEK
DRAWN BY V. ORTEGA
CHECKED BY B. RAWSON
IN CHARGE Q. EARLE
DATE 02/17/12

PROPOSED PRELIMINARY DESIGN

NOT FOR CONSTRUCTION

URS | HMM | ARUP
CALIFORNIA HIGH-SPEED TRAIN

CALIFORNIA
HIGH-SPEED RAIL AUTHORITY

CALIFORNIA HIGH-SPEED TRAIN PROJECT
SIERRA SUBDIVISION
PACKAGE 1A
ROADWAY
ROADWAY / GRADE SEPARATION
TYPICAL SECTIONS

CONTRACT NO.
DRAWING NO. CV-T3006
SCALE AS SHOWN
SHEET NO.

NET53329 2/15/2012 8:16:21 AM CAHSRP-R1.TBL CHSR_PDF_half_black.plt \\SNA-DATA2\SNA_Project$_Sacramento\URS\235413 CA HSR Fresno Palmdale\16.0 Drawings\S1 HSR06-0003\Sheet Files\Package#1\Civil\S1-0

RETAINING WALL DATA

NO.	LOCATIONS BEGIN	LOCATIONS END	LENGTH	MAX HEIGHT
1	30.48' LT "STN" 16+22.65	30.48' LT "STN" 20+01.08	379'	26'
2	30.48' RT "STN" 16+91.14	30.48' RT "STN" 20+01.08	310'	26'
3	30.48' LT "STN" 27+96.08	30.48' LT "STN" 30+78.65	283'	19'
4	30.48' RT "STN" 27+96.08	30.48' RT "STN" 30+77.33	281'	19'

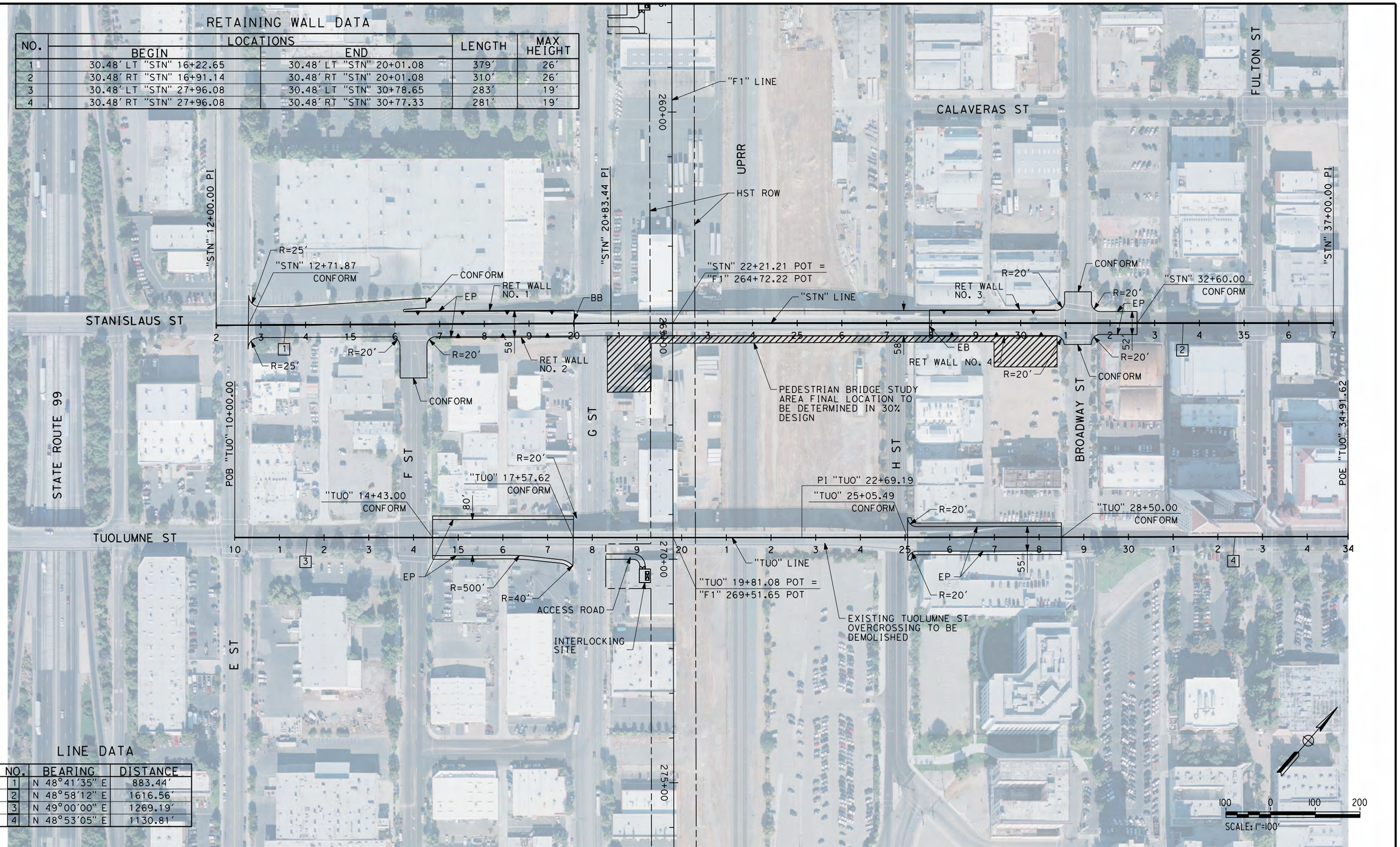

LINE DATA

NO.	BEARING	DISTANCE
1	N 48°41'35" E	883.44'
2	N 48°58'12" E	1616.56'
3	N 49°00'00" E	1269.19'
4	N 48°53'05" E	1130.81'

REV	DATE	BY	CHK	APP	DESCRIPTION

DESIGNED BY J. NETTLETON
DRAWN BY V. ORTEGA
CHECKED BY B. RAWSON
IN CHARGE Q. EARLE
DATE 03/28/12

RECORD SET 15% DESIGN SUBMISSION - NOT FOR CONSTRUCTION

URS | HMM | ARUP
CALIFORNIA HIGH-SPEED TRAIN

CALIFORNIA HIGH-SPEED RAIL AUTHORITY

CALIFORNIA HIGH-SPEED TRAIN PROJECT
FRESNO TO BAKERSFIELD
FRESNO SUBSECTION
ALIGNMENT F1
GRADE SEPARATION LAYOUT
STANISLAUS ST AND TUOLUMNE ST

CONTRACT NO. HSR 06-0003
DRAWING NO. CT1011
SCALE AS SHOWN
SHEET NO.

or152801 3/28/2012 3:35:18 PM CAHSRP-r1.tbl CHSR_PDF_half_black.plt G:_Sacramento\URS\235413 CA HSR Fresno Palmdale\16.0 Drawings\M-15% RBNSF Fresno\Sheet Files\Civil\CT1011.dgn

eron.sudhausen 2/13/2012 8:26:03 PM \\global\americas\Jobs\S-F\131000\131577\4 Internal Project Data\4-03 Drawings\4-03-02 15% Redesign\4-03-02-05 Design Sheets\Highway\F1\FB-CT-1013-F1.dgn

CURVE DATA

NO.	R	Δ	T	L	V
1	5000.00′	02°34′01"	112.01′	224.01′	30 MPH
2	2000.00′	05°55′10"	103.41′	206.63′	30 MPH
3	3000.00′	03°23′12"	88.69′	177.33′	30 MPH

LINE DATA

NO.	BEARING	DISTANCE
1	N 49°02′28" E	550.72′
2	N 51°36′29" E	312.56′
3	N 45°41′19" E	197.08′
4	N 49°04′31" E	587.07′
5	S 40°58′08" E	800.00′
6	S 41°00′03" E	1188.39′

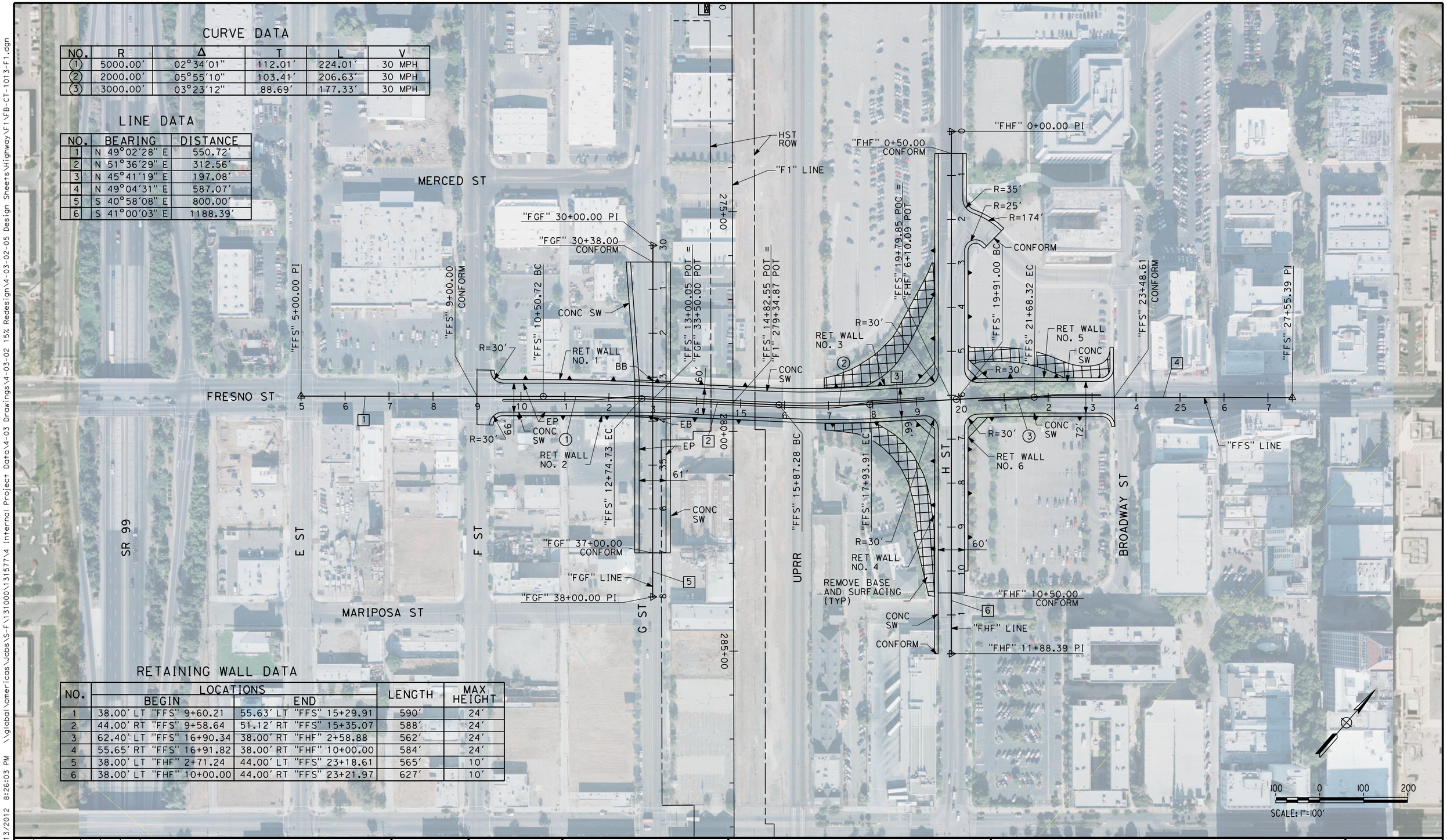

RETAINING WALL DATA

NO.	LOCATIONS BEGIN	LOCATIONS END	LENGTH	MAX HEIGHT
1	38.00′ LT "FFS" 9+60.21	55.63′ LT "FFS" 15+29.91	590′	24′
2	44.00′ RT "FFS" 9+58.64	51.12′ RT "FFS" 15+35.07	588′	24′
3	62.40′ LT "FFS" 16+90.34	38.00′ RT "FHF" 2+58.88	562′	24′
4	55.65′ RT "FFS" 16+91.82	38.00′ RT "FHF" 10+00.00	584′	24′
5	38.00′ LT "FHF" 2+71.24	44.00′ LT "FFS" 23+18.61	565′	10′
6	38.00′ LT "FHF" 10+00.00	44.00′ RT "FFS" 23+21.97	627′	10′

REV	DATE	BY	CHK	APP	DESCRIPTION

DESIGNED BY K. MING
DRAWN BY E. SUDHAUSEN
CHECKED BY M. BAMM
IN CHARGE R. COFFIN
DATE 02/15/12

RECORD SET 15% DESIGN SUBMISSION - NOT FOR CONSTRUCTION

URS | HMM | ARUP
CALIFORNIA HIGH-SPEED TRAIN

CALIFORNIA HIGH-SPEED RAIL AUTHORITY

CALIFORNIA HIGH-SPEED TRAIN PROJECT
FRESNO TO BAKERSFIELD

FRESNO SUBSECTION
ALIGNMENT F1
GRADE SEPARATION LAYOUT
FRESNO ST

CONTRACT NO. HSR 06-0003
DRAWING NO. CT1013
SCALE AS SHOWN
SHEET NO. 3 OF 28

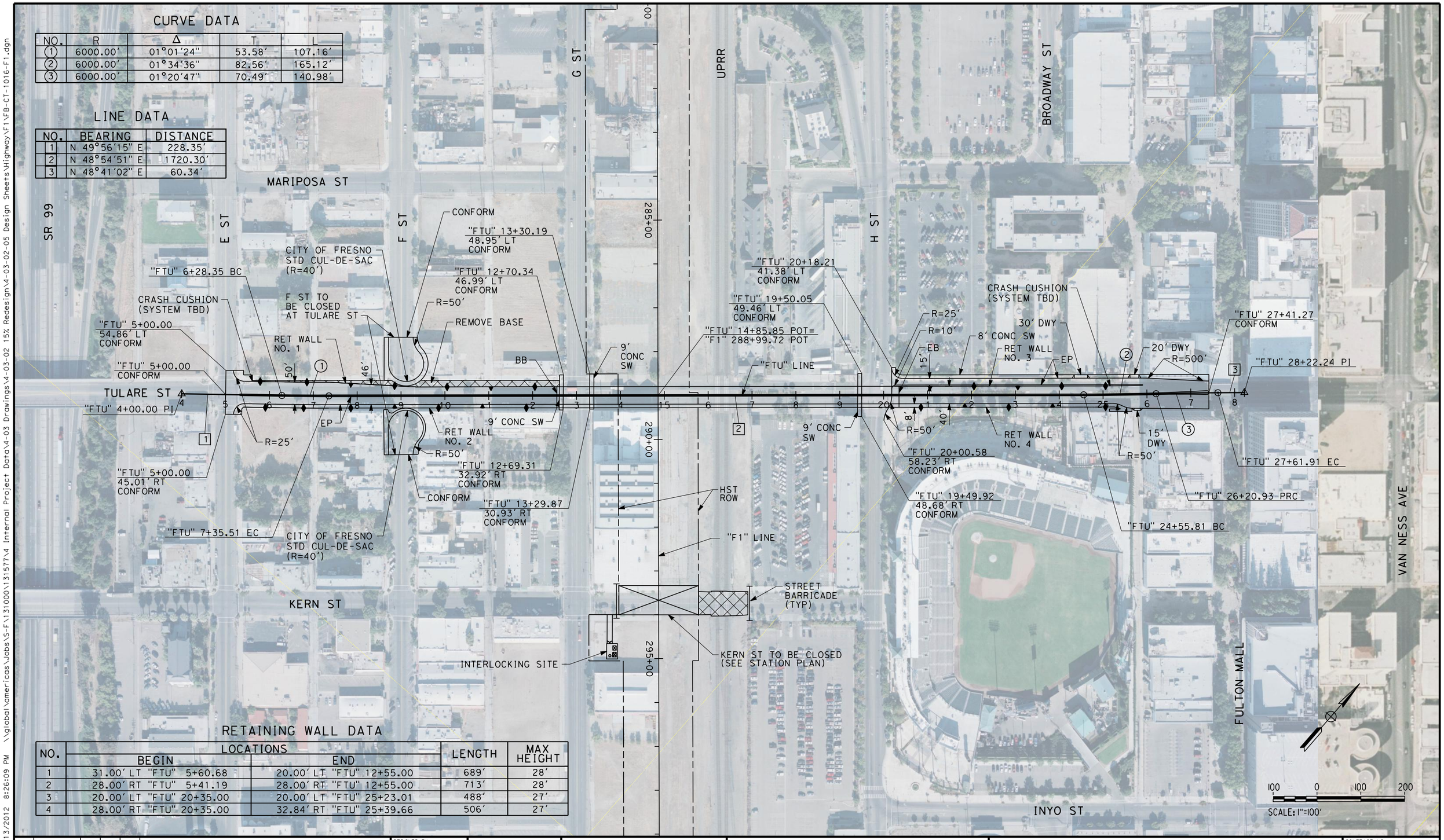

CURVE DATA

NO.	R	Δ	T	L
1	6000.00'	01°01'24"	53.58'	107.16'
2	6000.00'	01°34'36"	82.56'	165.12'
3	6000.00'	01°20'47"	70.49'	140.98'

LINE DATA

NO.	BEARING	DISTANCE
1	N 49°56'15" E	228.35'
2	N 48°54'51" E	1720.30'
3	N 48°41'02" E	60.34'

RETAINING WALL DATA

NO.	LOCATIONS		LENGTH	MAX HEIGHT
	BEGIN	END		
1	31.00' LT "FTU" 5+60.68	20.00' LT "FTU" 12+55.00	689'	28'
2	28.00' RT "FTU" 5+41.19	28.00' RT "FTU" 12+55.00	713'	28'
3	20.00' LT "FTU" 20+35.00	20.00' LT "FTU" 25+23.01	488'	27'
4	28.00' RT "FTU" 20+35.00	32.84' RT "FTU" 25+39.66	506'	27'

REV	DATE	BY	CHK	APP	DESCRIPTION

DESIGNED BY K. MING
DRAWN BY E. SUDHAUSEN
CHECKED BY M. BAMM
IN CHARGE R. COFFIN
DATE 02/15/12

RECORD SET 15% DESIGN SUBMISSION - NOT FOR CONSTRUCTION

URS | HMM | ARUP
CALIFORNIA HIGH-SPEED TRAIN

CALIFORNIA HIGH-SPEED RAIL AUTHORITY

CALIFORNIA HIGH-SPEED TRAIN PROJECT
FRESNO TO BAKERSFIELD
FRESNO SUBSECTION
ALIGNMENT F1
GRADE SEPARATION LAYOUT
TULARE ST (OVERHEAD)

CONTRACT NO. HSR 06-0003
DRAWING NO. CT1016
SCALE AS SHOWN
SHEET NO. 4 OF 28

eron.sudhausen 2/13/2012 8:26:09 PM \\global\americas\Jobs\S-F\131000\131577\4 Internal Project Data\4-03 Drawings\4-03-02 15% Redesign\4-03-02-05 Design Sheets\Highway\F1\FB-CT-1016-F1.dgn

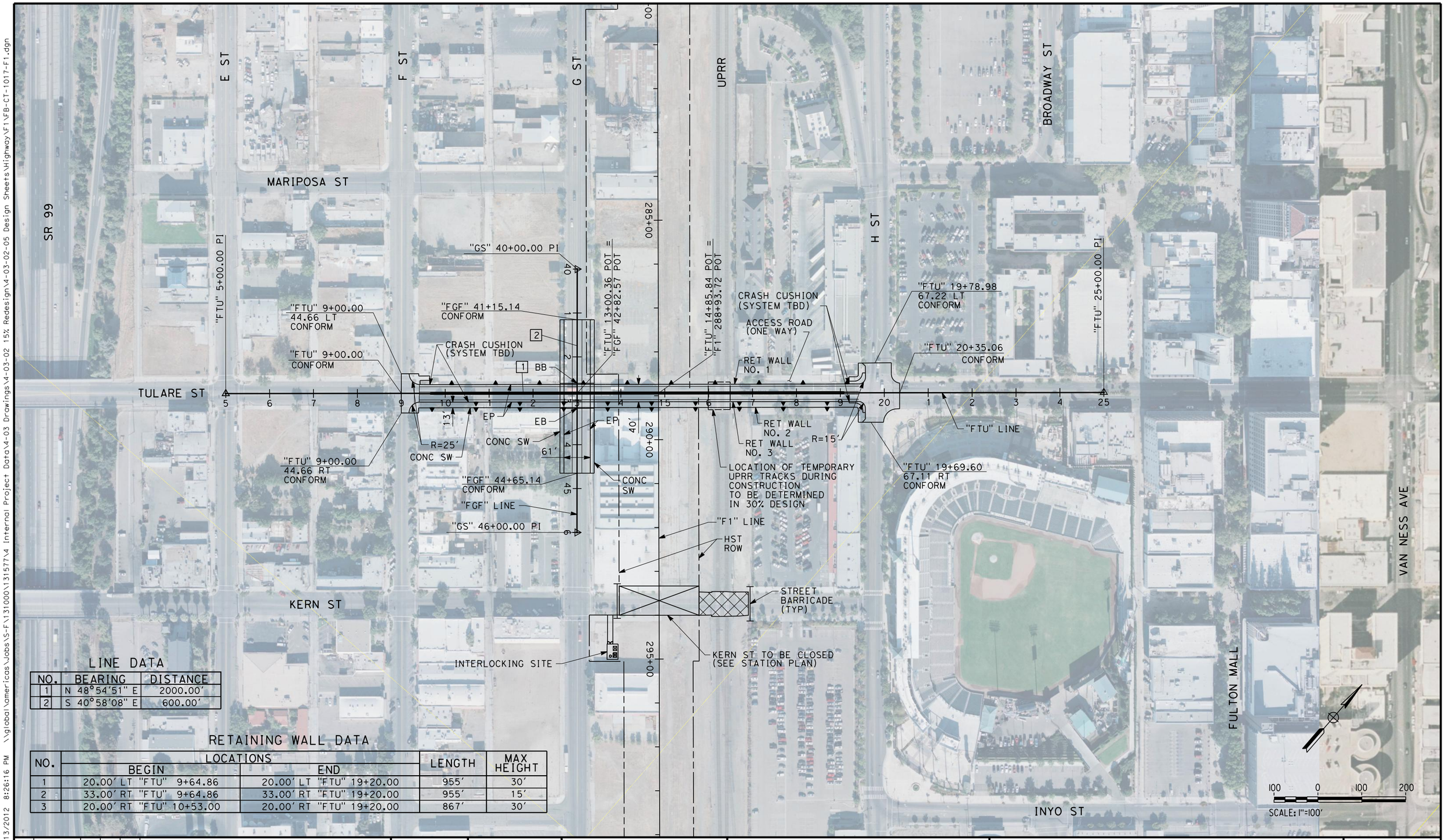

LINE DATA

NO.	BEARING	DISTANCE
1	N 48°54'51" E	2000.00'
2	S 40°58'08" E	600.00'

RETAINING WALL DATA

NO.	LOCATIONS		LENGTH	MAX HEIGHT
	BEGIN	END		
1	20.00' LT "FTU" 9+64.86	20.00' LT "FTU" 19+20.00	955'	30'
2	33.00' RT "FTU" 9+64.86	33.00' RT "FTU" 19+20.00	955'	15'
3	20.00' RT "FTU" 10+53.00	20.00' RT "FTU" 19+20.00	867'	30'

REV	DATE	BY	CHK	APP	DESCRIPTION

DESIGNED BY K. MING
DRAWN BY E. SUDHAUSEN
CHECKED BY M. BAMM
IN CHARGE R. COFFIN
DATE 02/15/12

RECORD SET 15% DESIGN SUBMISSION - NOT FOR CONSTRUCTION

URS | HMM | ARUP
CALIFORNIA HIGH-SPEED TRAIN

CALIFORNIA HIGH-SPEED RAIL AUTHORITY

CALIFORNIA HIGH-SPEED TRAIN PROJECT
FRESNO TO BAKERSFIELD
FRESNO SUBSECTION
ALIGNMENT F1
GRADE SEPARATION LAYOUT
TULARE ST (UNDERPASS)

CONTRACT NO. HSR 06-0003
DRAWING NO. CT1017
SCALE AS SHOWN
SHEET NO. 5 OF 28

eron.sudhausen 2/13/2012 8:26:16 PM \\global\americas\Jobs\S-F\131000\131577\4 Internal Project Data\4-03 Drawings\4-03-02 15% Redesign\4-03-02-05 Design Sheets\Highway\F1\FB-CT-1017-F1.dgn

NET53329 2/13/2012 1:52:03 PM CAHSRP-r1.tbl CHSR_PDF_half_black.pltx\SNA-DATA2\SNA_Project#$_Sacramento\URS\235413 CA HSR Fresno Palmdale\16.0 Drawings\M-15% RBNSF Fresno\Sheet Files\Civil\CT1019.dgn

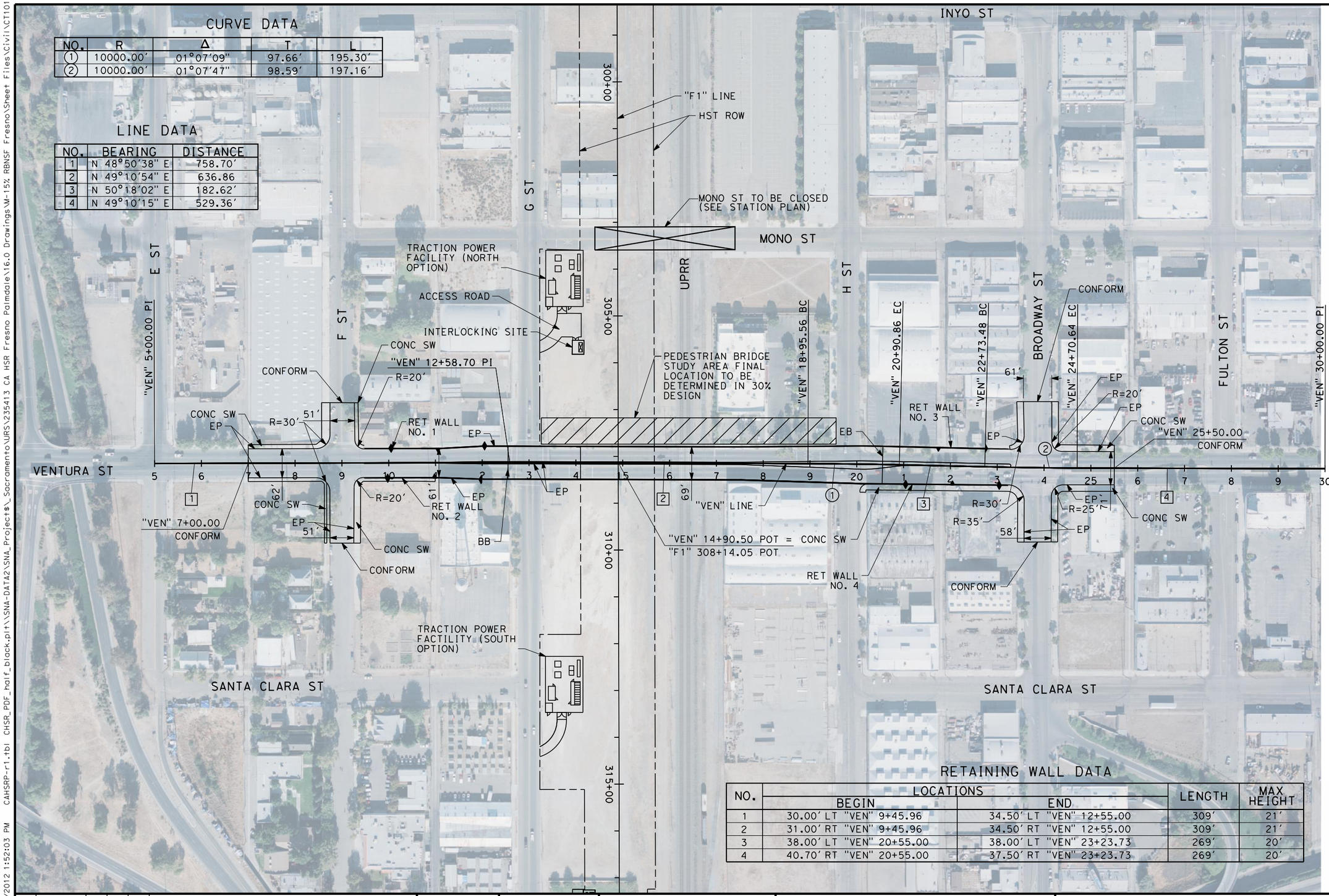

CURVE DATA

NO.	R	Δ	T	L
1	10000.00'	01°07'09"	97.66'	195.30'
2	10000.00'	01°07'47"	98.59'	197.16'

LINE DATA

NO.	BEARING	DISTANCE
1	N 48°50'38" E	758.70'
2	N 49°10'54" E	636.86
3	N 50°18'02" E	182.62'
4	N 49°10'15" E	529.36'

RETAINING WALL DATA

NO.	LOCATIONS BEGIN	LOCATIONS END	LENGTH	MAX HEIGHT
1	30.00' LT "VEN" 9+45.96	34.50' LT "VEN" 12+55.00	309'	21'
2	31.00' RT "VEN" 9+45.96	34.50' RT "VEN" 12+55.00	309'	21'
3	38.00' LT "VEN" 20+55.00	38.00' LT "VEN" 23+23.73	269'	20'
4	40.70' RT "VEN" 20+55.00	37.50' RT "VEN" 23+23.73	269'	20'

100 0 100 200
SCALE: 1"=100'

REV	DATE	BY	CHK	APP	DESCRIPTION

DESIGNED BY J. NETTLETON
DRAWN BY V. ORTEGA
CHECKED BY M. BAMM
IN CHARGE Q. EARLE
DATE 02/15/12

RECORD SET 15% DESIGN SUBMISSION - NOT FOR CONSTRUCTION

URS | HMM | ARUP
CALIFORNIA HIGH-SPEED TRAIN

CALIFORNIA HIGH-SPEED RAIL AUTHORITY

CALIFORNIA HIGH-SPEED TRAIN PROJECT
FRESNO TO BAKERSFIELD
FRESNO SUBSECTION
ALIGNMENT F1
GRADE SEPARATION LAYOUT
VENTURA ST

CONTRACT NO. HSR 06-0003
DRAWING NO. CT1019
SCALE AS SHOWN
SHEET NO. 6 OF 28

LINE DATA

NO.	BEARING	DISTANCE
1	N 48°50'38" E	150.84'
2	N 47°43'02" E	351.77'
3	N 48°50'38" E	641.15'
4	N 51°32'20" E	438.07'

CURVE DATA

NO.	R	Δ	T	L
1	5000.00'	01°07'36"	49.16'	98.32'
2	5000.00'	01°07'36"	49.16'	98.32'
3	2000.00'	02°41'43"	47.05'	94.08'

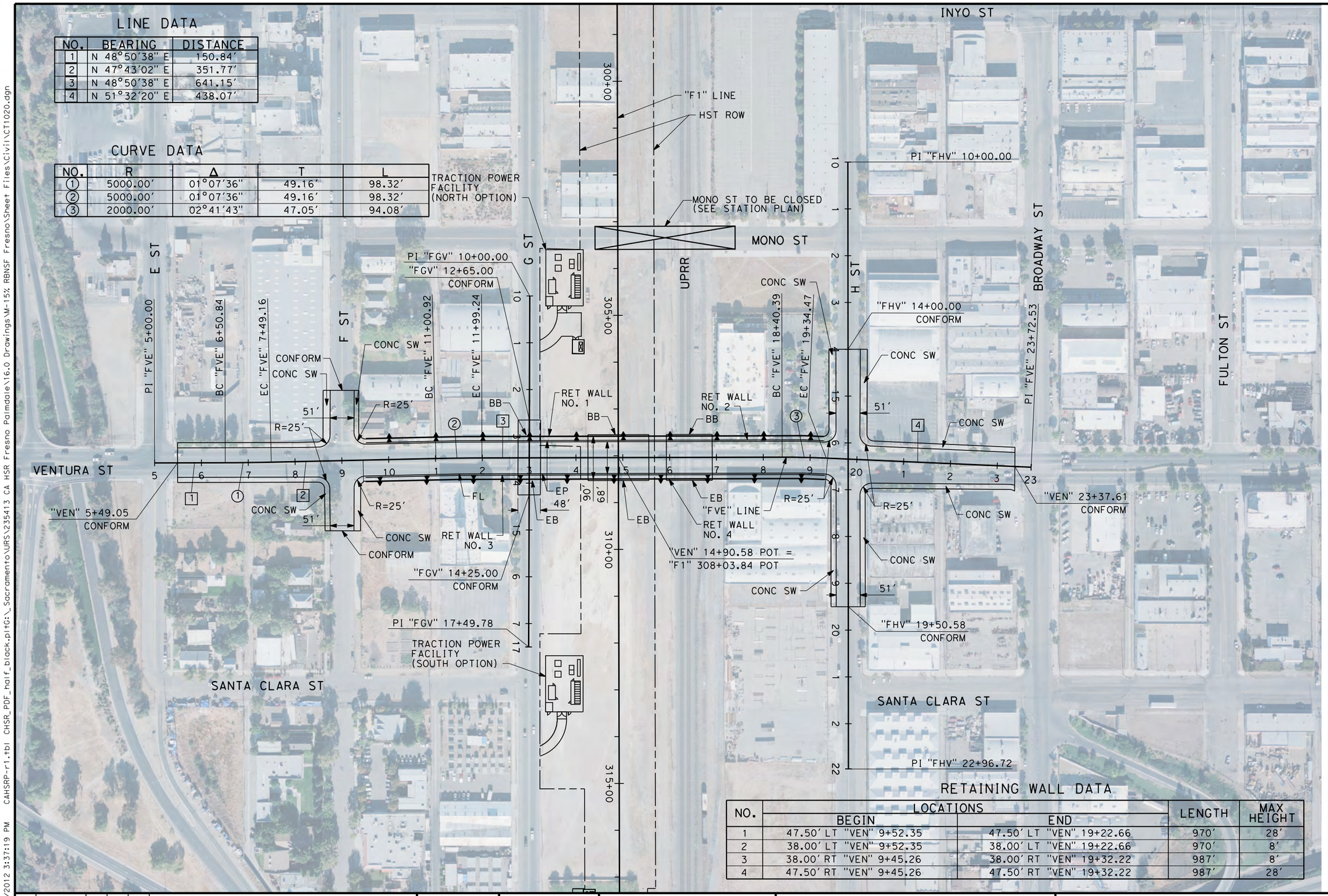

RETAINING WALL DATA

NO.	LOCATIONS BEGIN	LOCATIONS END	LENGTH	MAX HEIGHT
1	47.50' LT "VEN" 9+52.35	47.50' LT "VEN" 19+22.66	970'	28'
2	38.00' LT "VEN" 9+52.35	38.00' LT "VEN" 19+22.66	970'	8'
3	38.00' RT "VEN" 9+45.26	38.00' RT "VEN" 19+32.22	987'	8'
4	47.50' RT "VEN" 9+45.26	47.50' RT "VEN" 19+32.22	987'	28'

100 0 100 200
SCALE: 1"=100'

REV	DATE	BY	CHK	APP	DESCRIPTION

DESIGNED BY J. NETTLETON
DRAWN BY V. ORTEGA
CHECKED BY B. RAWSON
IN CHARGE Q. EARLE
DATE 03/28/12

RECORD SET 15% DESIGN SUBMISSION - NOT FOR CONSTRUCTION

URS | HMM | ARUP
CALIFORNIA HIGH-SPEED TRAIN

CALIFORNIA HIGH-SPEED RAIL AUTHORITY

CALIFORNIA HIGH-SPEED TRAIN PROJECT
FRESNO TO BAKERSFIELD
FRESNO SUBSECTION
ALIGNMENT F1
GRADE SEPARATION LAYOUT
VENTURA ST

CONTRACT NO. HSR 06-0003
DRAWING NO. CT1020
SCALE AS SHOWN
SHEET NO.

ort52801 3/28/2012 3:37:19 PM CAHSRP-r1.tbl CHSR_PDF_half_black.pltG:_Sacramento\URS\235413 CA HSR Fresno Palmdale\16.0 Drawings\M-15% RBNSF Fresno\Sheet Files\Civil\CT1020.dgn

NOTES:

1. MINIMUM VERTICAL CLEARANCE OVER HST IS 27' FROM TOP OF RAIL.
2. MINIMUM VERTICAL CLEARANCE OVER UPRR IS 23.5' FROM TOP OF RAIL.
3. MINIMUM VERTICAL CLEARANCE OVER LOCAL STREET IS 15' FROM ROAD SURFACE.
4. VERTICAL DESIGN SPEED = 30 MPH

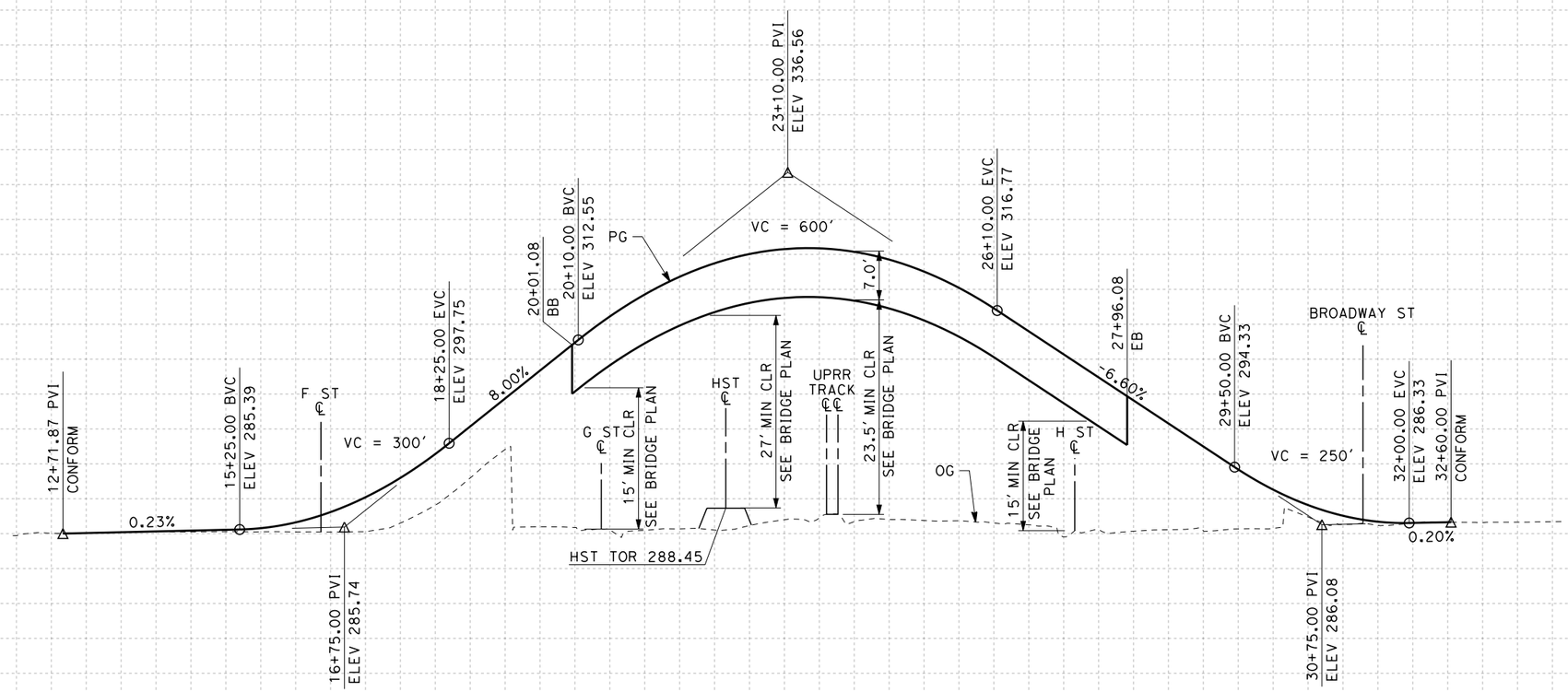

PROFILE
"STN" LINE
SCALE: HORIZ 1"=100'
VERT 1"=10'

STATION		10	1	2	3	4	15	6	7	8	9	20	1	2	3	4	25	6	7	8	9	30	1	2	3	4	35	TOTAL
CY	Exc																											
	Emb																											

REV	DATE	BY	CHK	APP	DESCRIPTION

DESIGNED BY J. NETTLETON
DRAWN BY V. ORTEGA
CHECKED BY B. RAWSON
IN CHARGE O. EARLE
DATE 03/28/12

RECORD SET 15% DESIGN SUBMISSION
-
NOT FOR CONSTRUCTION

URS | HMM | ARUP
CALIFORNIA HIGH-SPEED TRAIN

CALIFORNIA HIGH-SPEED RAIL AUTHORITY

CALIFORNIA HIGH-SPEED TRAIN PROJECT
FRESNO TO BAKERSFIELD
FRESNO SUBSECTION
ALIGNMENT F1
GRADE SEPARATION PROFILE
STANISLAUS ST

CONTRACT NO. HSR 06-0003
DRAWING NO. CT2011
SCALE AS SHOWN
SHEET NO.

3/28/2012 3:38:35 PM CAHSRP-r1.tbl CHSR_PDF_half_black.pltG:_Sacramento\URS\235413 CA HSR Fresno Palmdale\16.0 Drawings\M-15% RBNSF Fresno\Sheet Files\Civil\CT2011.dgn
ort52801

NOTES:

1. VERTICAL DESIGN SPEED = 30 MPH

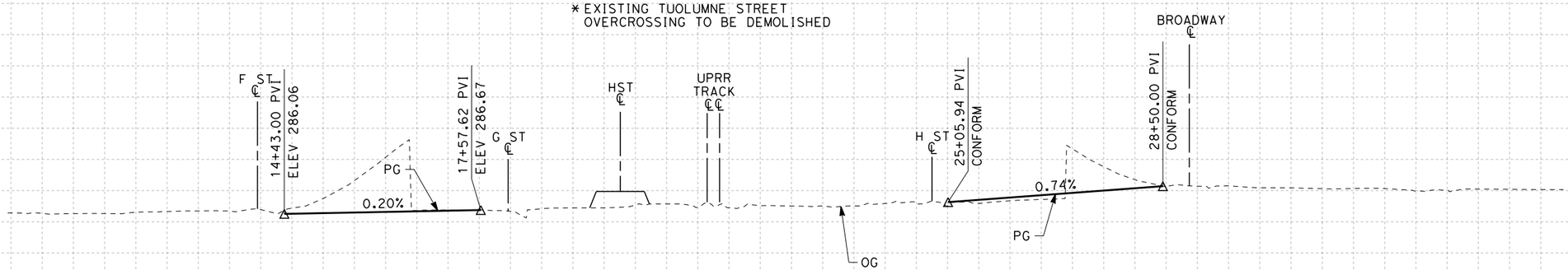

PROFILE

"TUO" LINE

SCALE: HORIZ 1"=100'
VERT 1"=10'

STATION		10	1	2	3	4	15	6	7	8	9	20	1	2	3	4	25	6	7	8	9	30	TOTAL
CY	Exc																						
	Emb																						

REV	DATE	BY	CHK	APP	DESCRIPTION

DESIGNED BY J. NETTLETON
DRAWN BY V. ORTEGA
CHECKED BY B. RAWSON
IN CHARGE Q. EARLE
DATE 03/28/12

RECORD SET 15% DESIGN SUBMISSION - NOT FOR CONSTRUCTION

URS | HMM | ARUP
CALIFORNIA HIGH-SPEED TRAIN

CALIFORNIA HIGH-SPEED RAIL AUTHORITY

CALIFORNIA HIGH-SPEED TRAIN PROJECT
FRESNO TO BAKERSFIELD
FRESNO SUBSECTION
ALIGNMENT F1
GRADE SEPARATION PROFILE
TUOLUMNE ST

CONTRACT NO. HSR 06-0003
DRAWING NO. CT2012
SCALE AS SHOWN
SHEET NO.

or152801 3/28/2012 3:39:18 PM CAHSRP-r1.tbl CHSR_PDF_half_black.pltG:_Sacramento\URS\235413 CA HSR Fresno Palmdale\16.0 Drawings\M-15% RBNSF Fresno\Sheet Files\Civil\CT2012.dgn

NOTES:

1. VERTICAL CLEARANCE FOR FRESNO STREET UNDERPASS TO MATCH EXISTING CONDITION
2. VERTICAL DESIGN SPEED = 30 MPH
3. OG IS BASED UPON APPROXIMATED INTERMAP DTM

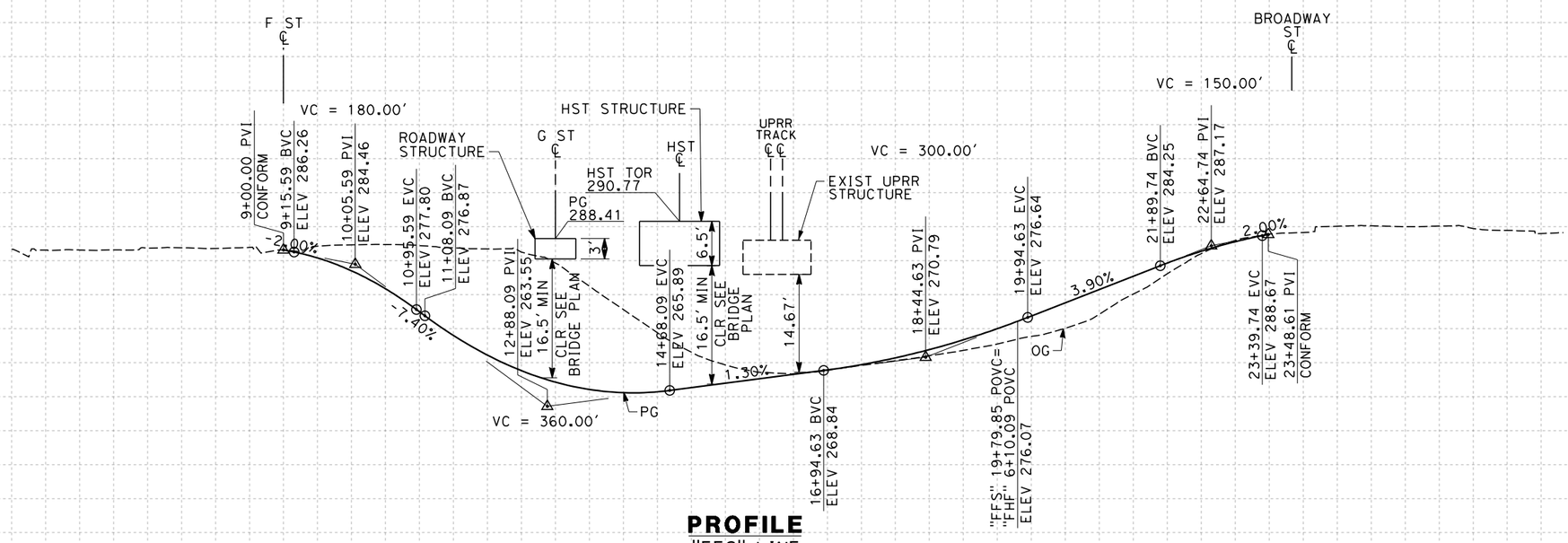

PROFILE

"FFS" LINE

SCALE: HORIZ 1"=100'

VERT 1"=10'

REV	DATE	BY	CHK	APP	DESCRIPTION

DESIGNED BY K. MING
DRAWN BY E. SUDHAUSEN
CHECKED BY M. BAMM
IN CHARGE R. COFFIN
DATE 02/15/12

RECORD SET 15% DESIGN SUBMISSION - NOT FOR CONSTRUCTION

URS | HMM | ARUP
CALIFORNIA HIGH-SPEED TRAIN

CALIFORNIA HIGH-SPEED RAIL AUTHORITY

CALIFORNIA HIGH-SPEED TRAIN PROJECT
FRESNO TO BAKERSFIELD
FRESNO SUBSECTION
ALIGNMENT F1
GRADE SEPARATION PROFILE
FRESNO ST

CONTRACT NO. HSR 06-0003
DRAWING NO. CT2013
SCALE AS SHOWN
SHEET NO. 12 OF 28

eron.sudhausen 2/13/2012 8:26:36 PM \\global\americas\Jobs\S-F\131000\131577\4 Internal Project Data\4-03 Drawings\4-03-02 15% Redesign\4-03-02-05 Design Sheets\Highway\F1\FB-CT-2013-F1.dgn

NOTES:

1. VERTICAL DESIGN SPEED = 30 MPH
2. OG IS BASED UPON APPROXIMATED INTERMAP DTM
3. REFER TO SHEET CT1013 FOR LAYOUT

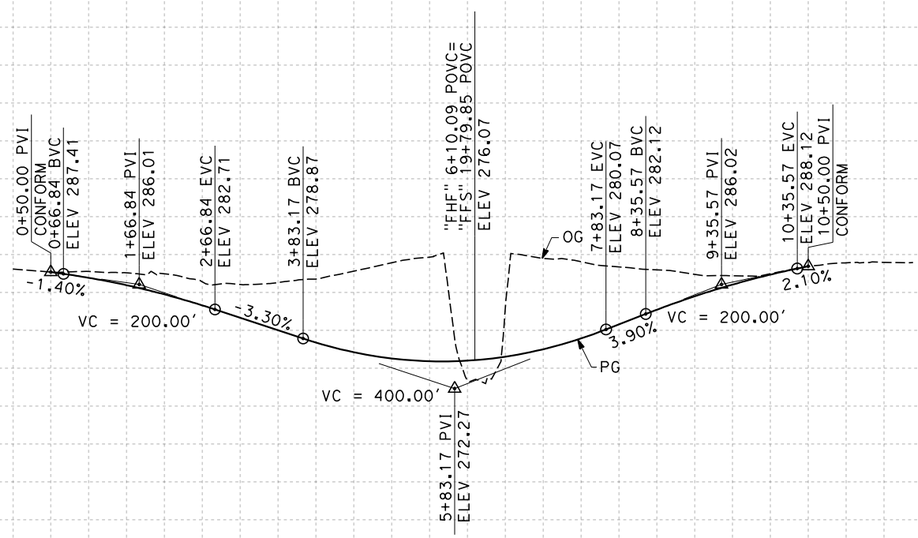

PROFILE

"FHF" LINE

SCALE: HORIZ 1"=100'

VERT 1"=10'

STATION		0	1	2	3	4	5	6	7	8	9	10	1	2	3	TOTAL
CY	Exc															
	Emb															

REV	DATE	BY	CHK	APP	DESCRIPTION

DESIGNED BY K. MING
DRAWN BY E. SUDHAUSEN
CHECKED BY M. BAMM
IN CHARGE R. COFFIN
DATE 02/15/12

RECORD SET 15% DESIGN SUBMISSION - NOT FOR CONSTRUCTION

URS | HMM | ARUP
CALIFORNIA HIGH-SPEED TRAIN

CALIFORNIA HIGH-SPEED RAIL AUTHORITY

CALIFORNIA HIGH-SPEED TRAIN PROJECT
FRESNO TO BAKERSFIELD
FRESNO SUBSECTION
ALIGNMENT F1
GRADE SEPARATION PROFILE
H ST (FRESNO ST)

CONTRACT NO. HSR 06-0003
DRAWING NO. CT2014
SCALE AS SHOWN
SHEET NO. 13 OF 28

eron.sudhausen 2/13/2012 8:26:37 PM \\global\americas\Jobs\S-F\131000\131577\4 Internal Project Data\4-03 Drawings\4-03-02 15% Redesign\4-03-02-05 Design Sheets\Highway\F1\FB-CT-2014-F1.dgn

NOTES:

1. MINIMUM VERTICAL CLEARANCE OVER LOCAL STREET IS 16.5' FROM ROAD SURFACE
2. VERTICAL DESIGN SPEED = 40 MPH
3. OG IS BASED UPON APPROXIMATED INTERMAP DTM
4. REFER TO SHEET CT1013 FOR LAYOUT

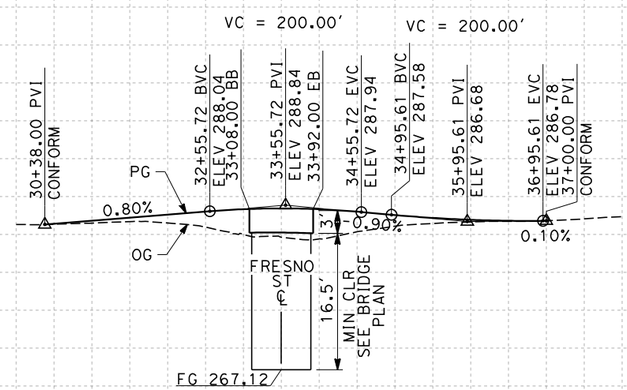

PROFILE

"FGF" LINE
SCALE: HORIZ 1"=100'
VERT 1"=10'

STATION		30	1	2	3	4	35	6	7	8	TOTAL
CY	Exc										
	Emb										

REV	DATE	BY	CHK	APP	DESCRIPTION

DESIGNED BY K. MING
DRAWN BY E. SUDHAUSEN
CHECKED BY M. BAMM
IN CHARGE R. COFFIN
DATE 02/15/12

RECORD SET 15% DESIGN SUBMISSION - NOT FOR CONSTRUCTION

URS | HMM | ARUP
CALIFORNIA HIGH-SPEED TRAIN

CALIFORNIA HIGH-SPEED RAIL AUTHORITY

CALIFORNIA HIGH-SPEED TRAIN PROJECT
FRESNO TO BAKERSFIELD
FRESNO SUBSECTION
ALIGNMENT F1
GRADE SEPARATION PROFILE
G ST (FRESNO ST)

CONTRACT NO. HSR 06-0003
DRAWING NO. CT2015
SCALE AS SHOWN
SHEET NO. 14 OF 28

eron.sudhausen 2/13/2012 8:26:38 PM \\global\americas\Jobs\S-F\131000\131577\4 Internal Project Data\4-03 Drawings\4-03-02 15% Redesign\4-03-02-05 Design Sheets\Highway\F1\FB-CT-2015-F1.dgn

NOTES:

1. MINIMUM VERTICAL CLEARANCE OVER HST IS 27' FROM TOP OF RAIL
2. MINIMUM VERTICAL CLEARANCE OVER UPRR IS 23.5' FROM TOP OF RAIL
3. MINIMUM VERTICAL CLEARANCE OVER LOCAL STREET IS 15' FROM ROAD SURFACE
4. VERTICAL DESIGN SPEED = 30 MPH
5. OG IS BASED UPON APPROXIMATED INTERMAP DTM

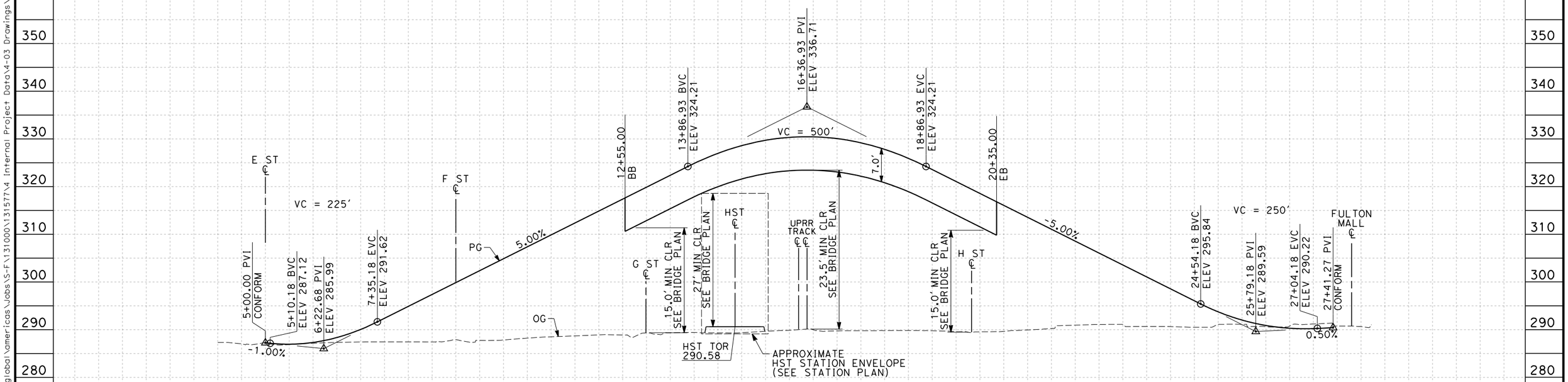

PROFILE

"FTU" LINE
SCALE: HORIZ 1"=100'
VERT 1"=10'

STATION		5	6	7	8	9	10	1	2	3	4	15	6	7	8	9	20	1	2	3	4	25	6	7	8	TOTAL
CY	Exc																									
	Emb																									

REV	DATE	BY	CHK	APP	DESCRIPTION

DESIGNED BY K. MING
DRAWN BY E. SUDHAUSEN
CHECKED BY M. BAMM
IN CHARGE R. COFFIN
DATE 02/15/12

RECORD SET 15% DESIGN SUBMISSION - NOT FOR CONSTRUCTION

URS | HMM | ARUP
CALIFORNIA HIGH-SPEED TRAIN

CALIFORNIA HIGH-SPEED RAIL AUTHORITY

CALIFORNIA HIGH-SPEED TRAIN PROJECT
FRESNO TO BAKERSFIELD
FRESNO SUBSECTION
ALIGNMENT F1
GRADE SEPARATION PROFILE
TULARE ST (OVERHEAD)

CONTRACT NO. HSR 06-0003
DRAWING NO. CT2016
SCALE AS SHOWN
SHEET NO. 15 OF 28

eron.sudhausen 2/13/2012 8:26:40 PM \\global\americas\Jobs\S-F\131000\131577\4 Internal Project Data\4-03 Drawings\4-03-02 15% Redesign\4-03-02-05 Design Sheets\Highway\F1\FB-CT-2016-F1.dgn

NOTES:

1. MINIMUM VERTICAL CLEARANCE UNDER STRUCTURE IS 16.5' FROM ROAD SURFACE
2. VERTICAL DESIGN SPEED = 25 MPH
3. OG IS BASED UPON APPROXIMATED INTERMAP DTM

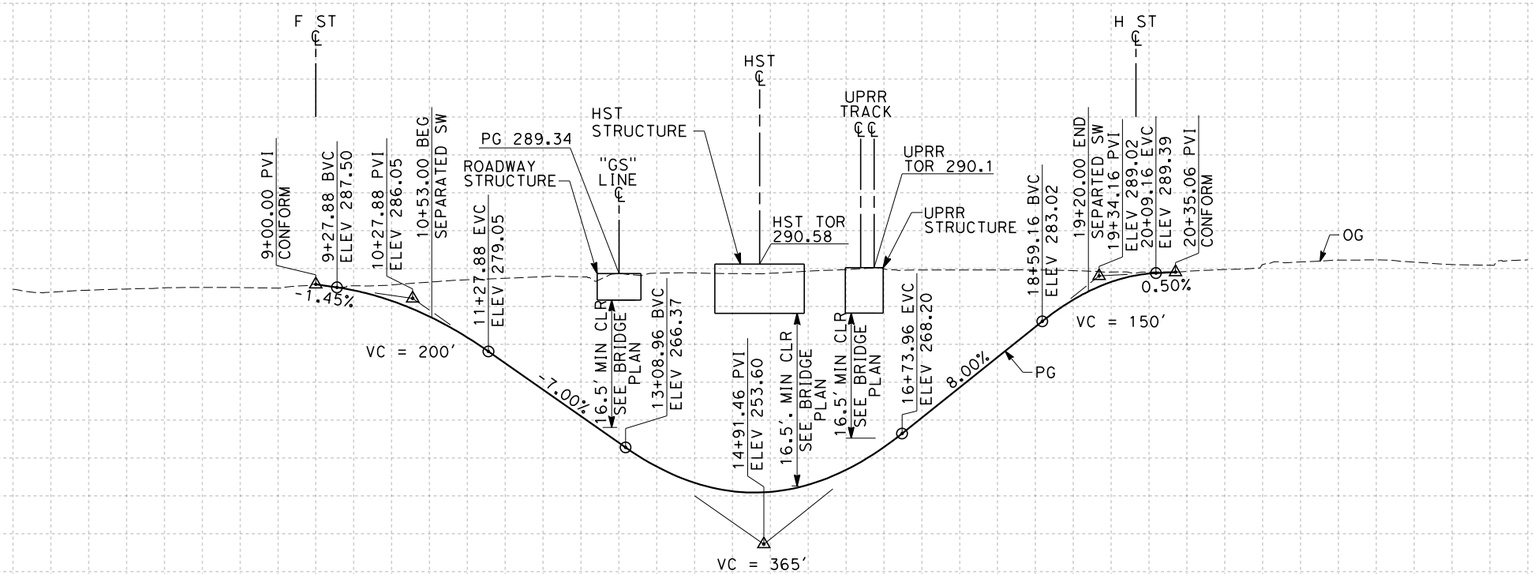

PROFILE

"FTU" LINE
SCALE: HORIZ 1"=100'
VERT 1"=10'

STATION	5	6	7	8	9	10	1	2	3	4	15	6	7	8	9	20	1	2	3	4	25	6	7	8	TOTAL
CY Exc																									
CY Emb																									

REV	DATE	BY	CHK	APP	DESCRIPTION

DESIGNED BY K. MING
DRAWN BY E. SUDHAUSEN
CHECKED BY M. BAMM
IN CHARGE R. COFFIN
DATE 02/15/12

RECORD SET 15% DESIGN SUBMISSION - NOT FOR CONSTRUCTION

URS | HMM | ARUP
CALIFORNIA HIGH-SPEED TRAIN

CALIFORNIA HIGH-SPEED RAIL AUTHORITY

CALIFORNIA HIGH-SPEED TRAIN PROJECT
FRESNO TO BAKERSFIELD
FRESNO SUBSECTION
ALIGNMENT F1
GRADE SEPARATION PROFILE
TULARE ST (UNDERPASS)

CONTRACT NO. HSR 06-0003
DRAWING NO. CT2017
SCALE AS SHOWN
SHEET NO. 16 OF 28

eron.sudhausen 2/13/2012 8:26:40 PM \\global\americas\Jobs\S-F\131000\131577\4 Internal Project Data\4-03 Drawings\4-03-02 15% Redesign\4-03-02-05 Design Sheets\Highway\F1\FB-CT-2017-F1.dgn

NOTES:

1. MINIMUM VERTICAL CLEARANCE OVER LOCAL STREET IS 16.5' FROM ROAD SURFACE
2. VERTICAL DESIGN SPEED = 40 MPH
3. OG IS BASED UPON APPROXIMATED INTERMAP DTM
4. REFER TO SHEET CT1017 FOR LAYOUT

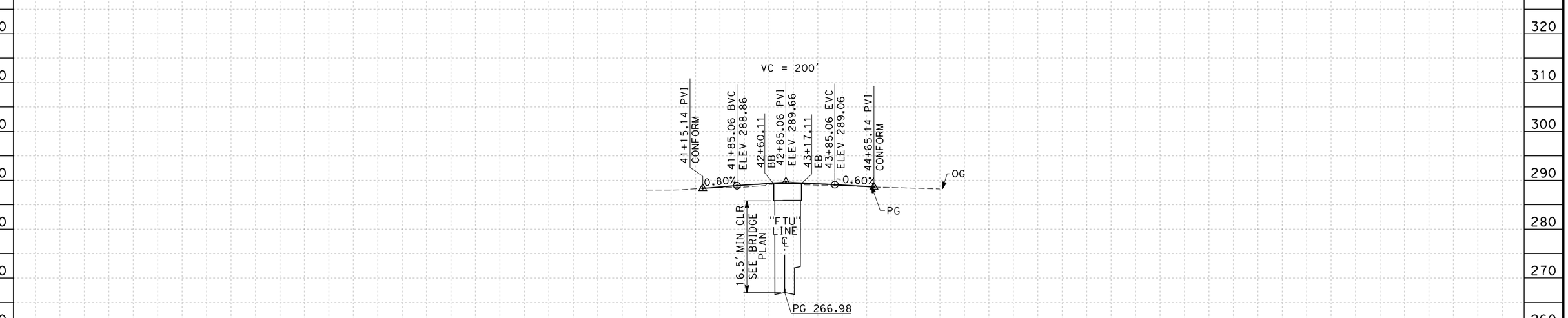

PROFILE

"FGF" LINE

SCALE: HORIZ 1"=100'

VERT 1"=10'

STATION		40	1	2	3	4	45	6	7	TOTAL
CY	Exc									
	Emb									

REV	DATE	BY	CHK	APP	DESCRIPTION

DESIGNED BY K. MING
DRAWN BY E. SUDHAUSEN
CHECKED BY M. BAMM
IN CHARGE R. COFFIN
DATE 02/15/12

RECORD SET 15% DESIGN SUBMISSION - NOT FOR CONSTRUCTION

URS | HMM | ARUP
CALIFORNIA HIGH-SPEED TRAIN

CALIFORNIA HIGH-SPEED RAIL AUTHORITY

CALIFORNIA HIGH-SPEED TRAIN PROJECT
FRESNO TO BAKERSFIELD
FRESNO SUBSECTION
ALIGNMENT F1
GRADE SEPARATION PROFILE
G ST (TULARE ST UNDERPASS)

CONTRACT NO. HSR 06-0003
DRAWING NO. CT2018
SCALE AS SHOWN
SHEET NO. 17 OF 28

eron.sudhausen 2/13/2012 8:26:41 PM \\global\americas\Jobs\S-F\131000\131577\4 Internal Project Data\4-03 Drawings\4-03-02 15% Redesign\4-03-02-05 Design Sheets\Highway\F1\FB-CT-2018-F1.dgn

NOTES:

1. MINIMUM VERTICAL CLEARANCE UNDER HST IS 16.5' FROM BOTTOM OF STRUCTURE
2. MINIMUM VERTICAL CLEARANCE UNDER UPRR IS 16.5' FROM BOTTOM OF STRUCTURE
3. MINIMUM VERTICAL CLEARANCE UNDER LOCAL STREET IS 16.5' FROM BOTTOM OF STRUCTURE
4. VERTICAL DESIGN SPEED = 25 MPH (AASHTO)

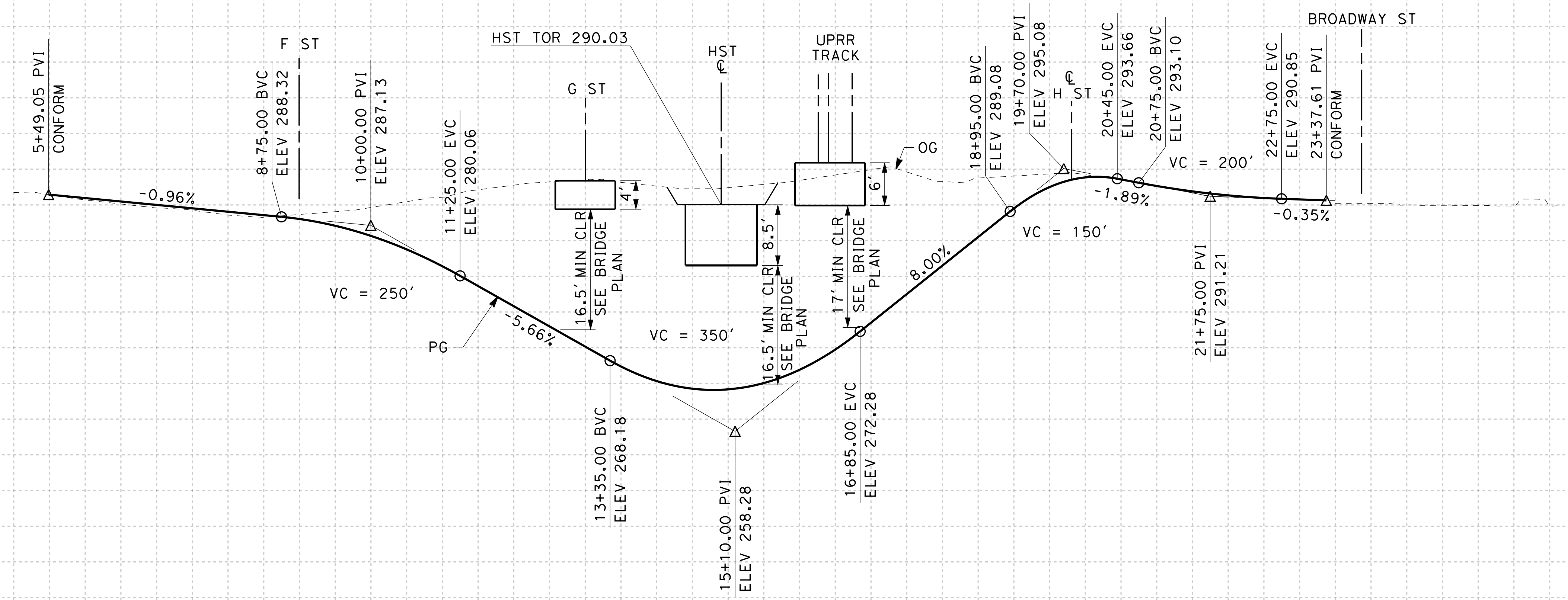

PROFILE

"VEN" LINE

SCALE: HORIZ 1"=100'

VERT 1"=10'

STATION																						TOTAL
CY Exc																						
CY Emb	5	6	7	8	9	10	1	2	3	4	15	6	7	8	9	20	1	2	3	4	25	

REV	DATE	BY	CHK	APP	DESCRIPTION

DESIGNED BY J. NETTLETON
DRAWN BY V. ORTEGA
CHECKED BY B. RAWSON
IN CHARGE O. EARLE
DATE 03/28/12

RECORD SET 15% DESIGN SUBMISSION - NOT FOR CONSTRUCTION

URS | HMM | ARUP — California High-Speed Train

CALIFORNIA HIGH-SPEED RAIL AUTHORITY

CALIFORNIA HIGH-SPEED TRAIN PROJECT
FRESNO TO BAKERSFIELD

FRESNO SUBSECTION
ALIGNMENT F1
GRADE SEPARATION PROFILE
VENTURA ST

CONTRACT NO. HSR 06-0003
DRAWING NO. CT2019
SCALE AS SHOWN
SHEET NO.

3/28/2012 3:39:56 PM CAHSRP-r1.tbl CHSR_PDF_half_black.plt G:_Sacramento\URS\235413 CA HSR Fresno Palmdale\16.0 Drawings\M-15% RBNSF Fresno\Sheet Files\Civil\CT2019.dgn ort52801

NOTES:

1. MINIMUM VERTICAL CLEARANCE UNDER LOCAL STREET IS 16.5' FROM BOTTOM OF STRUCTURE
2. VERTICAL DESIGN SPEED = 30 MPH

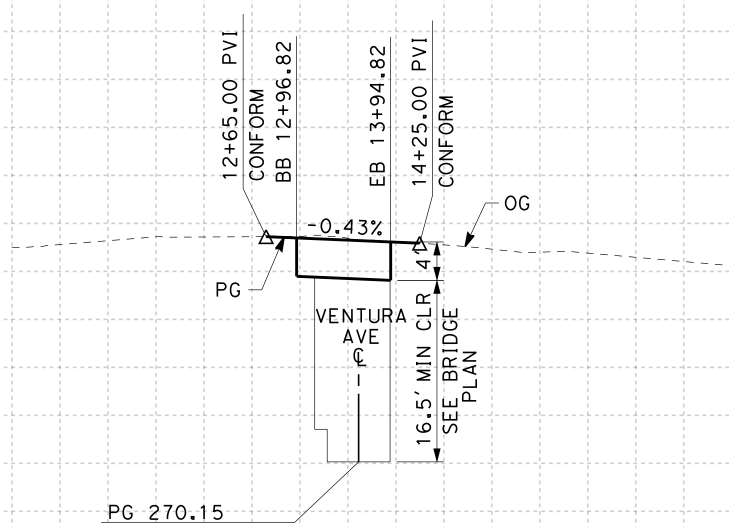

PROFILE
"FGV" LINE
SCALE: HORIZ 1"=100'
VERT 1"=10'

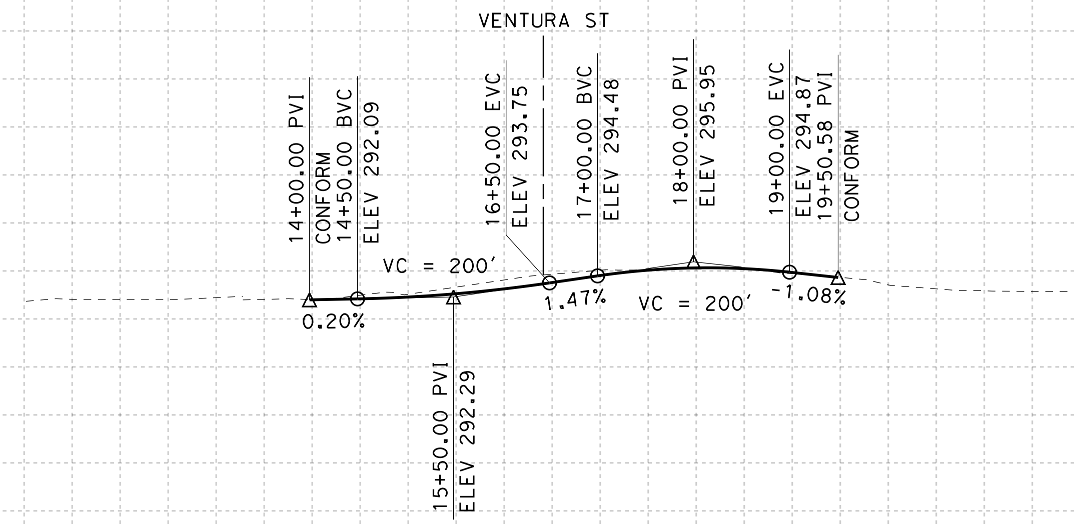

PROFILE
"FHV" LINE
SCALE: HORIZ 1"=100'
VERT 1"=10'

Elevations: 310, 300, 290, 280, 270, 260, 250, 240

STATION | TOTAL
CY Exc / Emb

10+00 1 2 3 4 15+00 6 7 8 9 1 2 3 4 15+00 6 7 8 9 20+00 1 2

REV	DATE	BY	CHK	APP	DESCRIPTION

DESIGNED BY J. NETTLETON
DRAWN BY V. ORTEGA
CHECKED BY B. RAWSON
IN CHARGE O. EARLE
DATE 03/28/12

RECORD SET 15% DESIGN SUBMISSION - NOT FOR CONSTRUCTION

URS | HMM | ARUP
CALIFORNIA HIGH-SPEED TRAIN

CALIFORNIA HIGH-SPEED RAIL AUTHORITY

CALIFORNIA HIGH-SPEED TRAIN PROJECT
FRESNO TO BAKERSFIELD
FRESNO SUBSECTION
ALIGNMENT F1
GRADE SEPARATION PROFILE
G ST (OVER VENTURA) & H ST

CONTRACT NO. HSR 06-0003
DRAWING NO. CT2029
SCALE AS SHOWN
SHEET NO.

ort52801 3/28/2012 3:40:29 PM CAHSRP-r1.tbl CHSR_PDF_half_black.plt G:_Sacramento\URS\235413 CA HSR Fresno Palmdale\16.0 Drawings\M-15% RBNSF Fresno\Sheet Files\Civil\CT2029.dgn

NOTES:

1. SUPERELEVATION AS SHOWN OR AS DIRECTED BY THE ENGINEER.
2. PAVEMENT SECTIONS ARE SHOWN FOR INFORMATIONAL PURPOSES ONLY. EXACT DIMENSION AND MATERIAL OF THE PAVEMENT SECTION TO BE CONFIRMED.
3. PEDESTRIAN FACILITIES WILL BE DESIGNED TO COMPLY WITH ADA REQUIREMENTS.

STRUCTURAL SECTIONS
TYPICAL ROADWAY

[1] 0.50' HMA (TYPE A)
1.50' CL2 AB

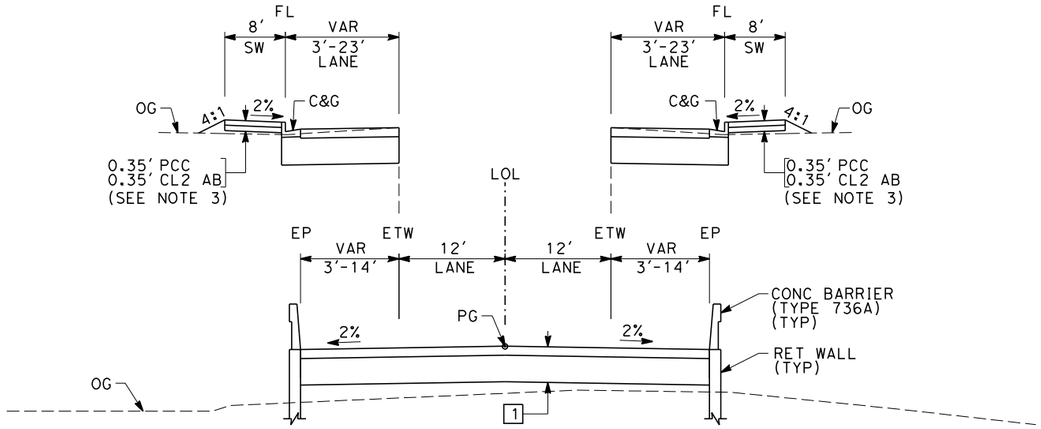

SECTION A

"STN" 14+70.00 TO 20+01.08
"STN" 27+96.08 TO 32+60.00
"TUO" 12+60.00 TO 17+54.63
"TUO" 25+14.96 TO 30+00.00

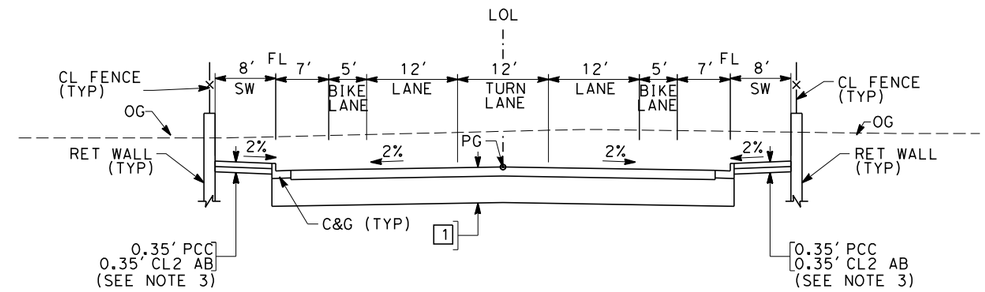

SECTION C

"FHF" 0+50.00 TO 10+50.00

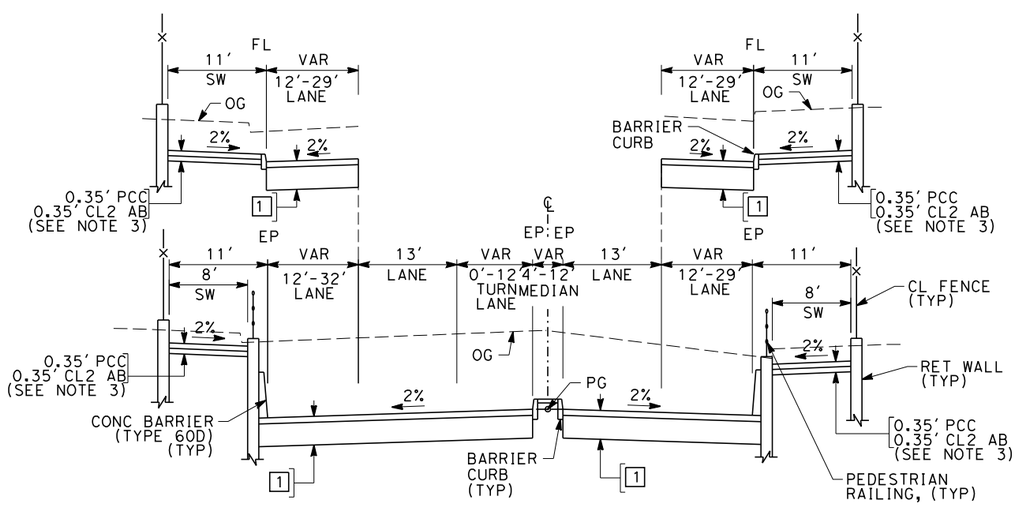

SECTION B

"FFS" 9+00.00 TO 23+48.61

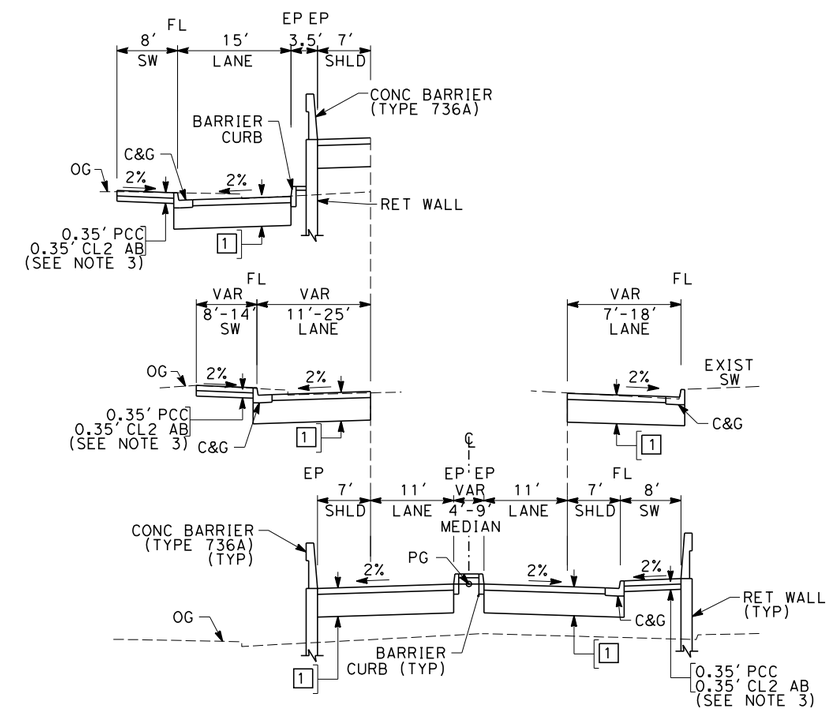

SECTION D

"FTU" 5+00.00 TO 12+55.00 (OVERHEAD OPTION)
"FTU" 20+35.00 TO 27+41.27 (OVERHEAD OPTION)

REV	DATE	BY	CHK	APP	DESCRIPTION

DESIGNED BY J. MONG
DRAWN BY E. SUDHAUSEN
CHECKED BY M. BAMM
IN CHARGE R. COFFIN
DATE 02/15/12

RECORD SET 15% DESIGN SUBMISSION - NOT FOR CONSTRUCTION

URS | HMM | ARUP
CALIFORNIA HIGH-SPEED TRAIN

CALIFORNIA HIGH-SPEED RAIL AUTHORITY

CALIFORNIA HIGH-SPEED TRAIN PROJECT
FRESNO TO BAKERSFIELD
FRESNO SUBSECTION
ALIGNMENT F1
ROADWAY / GRADE SEPARATION
TYPICAL CROSS SECTIONS

CONTRACT NO. HSR 06-0003
DRAWING NO. CT3001
SCALE NO SCALE
SHEET NO. 26 OF 28

eron.sudhausen 2/14/2012 2:39:17 PM \\global\americas\Jobs\S-F\131000\131577\4 Internal Project Data\4-03 Drawings\4-03-02 15% Redesign\4-03-02-05 Design Sheets\Highway\F1\FB-CT-3001-F1.dgn

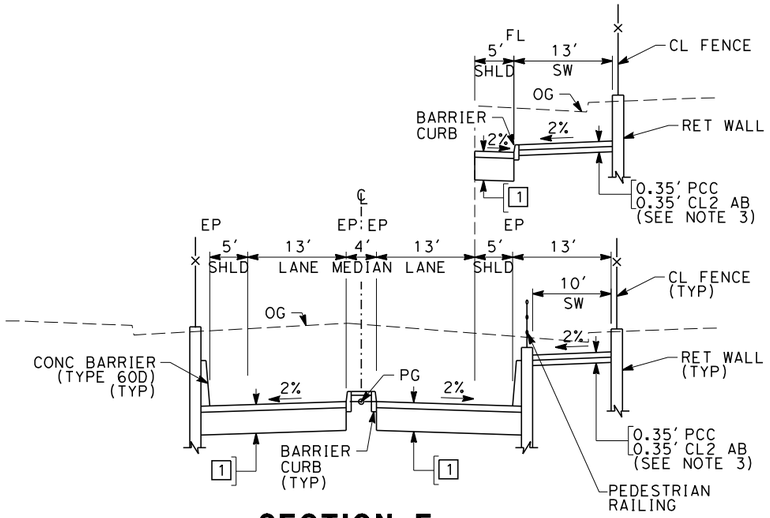

SECTION E

"FTU" 9+00.00 TO 20+35.06 (UNDERPASS OPTION)

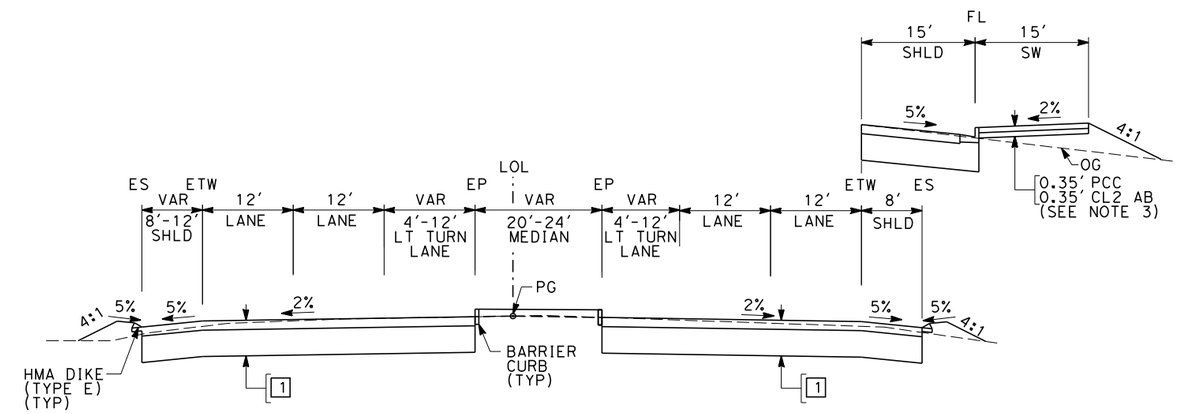

SECTION G

"SGS" 12+00.00 TO 20+00.00

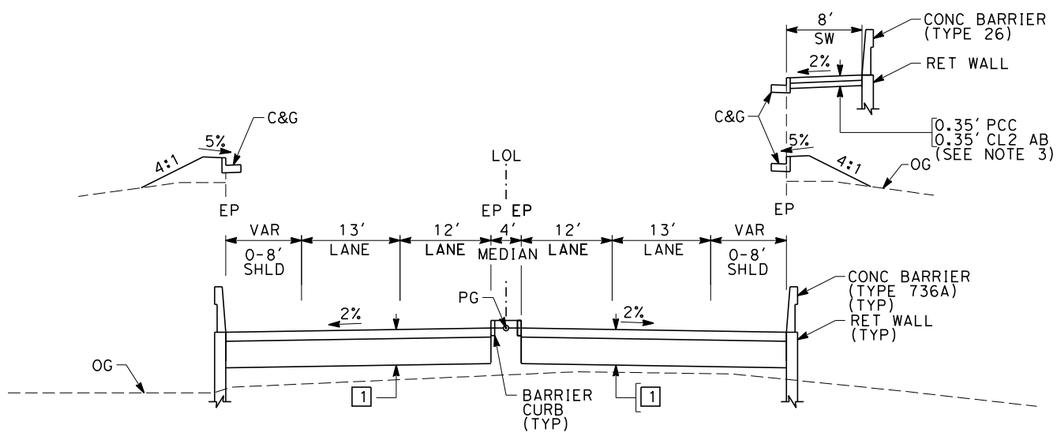

SECTION F

"VEN" 7+00.00 TO 12+55.00
"VEN" 20+55.00 TO 25+50.00
"FCH" 12+93.39 TO 20+89.37
"FCH" 30+49.37 TO 38+00.00

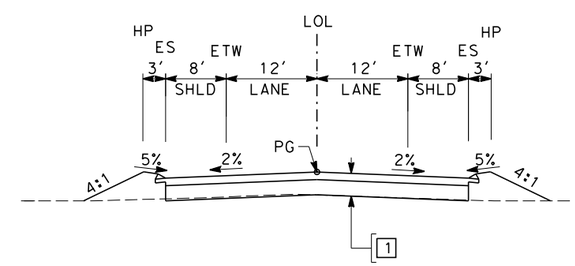

SECTION H

"FOC" 104+21.11 TO 106+94.71
"FOC" 107+95.45 TO 117+13.51
"FCE" 20+00.00 TO 24+06.53
"FCE" 44+00.00 TO 46+00.00
"FCD" 119+00.00 TO 129+00.00

REV	DATE	BY	CHK	APP	DESCRIPTION

DESIGNED BY J. MONG
DRAWN BY E. SUDHAUSEN
CHECKED BY M. BAMM
IN CHARGE R. COFFIN
DATE 02/15/12

RECORD SET 15% DESIGN SUBMISSION - NOT FOR CONSTRUCTION

URS | HMM | ARUP
CALIFORNIA HIGH-SPEED TRAIN

CALIFORNIA HIGH-SPEED RAIL AUTHORITY

CALIFORNIA HIGH-SPEED TRAIN PROJECT
FRESNO TO BAKERSFIELD
FRESNO SUBSECTION
ALIGNMENT F1
ROADWAY / GRADE SEPARATION
TYPICAL CROSS SECTIONS

CONTRACT NO. HSR 06-0003
DRAWING NO. CT3002
SCALE NO SCALE
SHEET NO. 27 OF 28

eron.sudhausen 2/13/2012 8:26:52 PM \\global\americas\Jobs\S-F\131000\131577\4 Internal Project Data\4-03 Drawings\4-03-02 15% Redesign\4-03-02-05 Design Sheets\Highway\F1\FB-CT-3002-F1.dgn

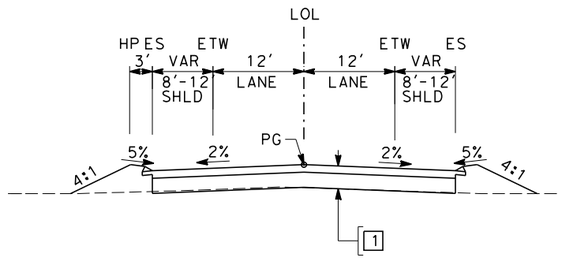

SECTION I

"FGC" 101+50.00 TO 106+87.24

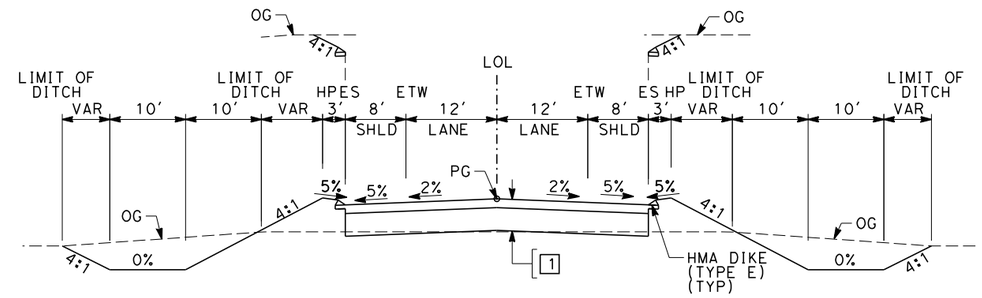

SECTION K

"FAM" 11+00.00 TO 23+91.66
"FAM" 27+71.66 TO 40+48.59

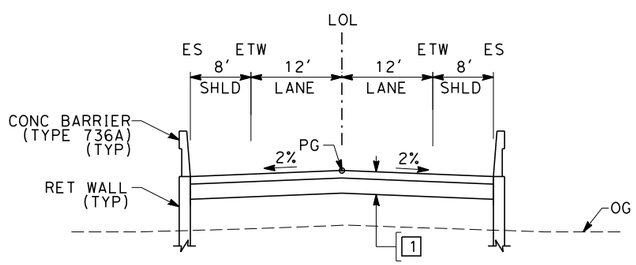

SECTION J

"FCE" 24+06.53 TO 31+87.10
"FCE" 37+97.10 TO 44+00.00

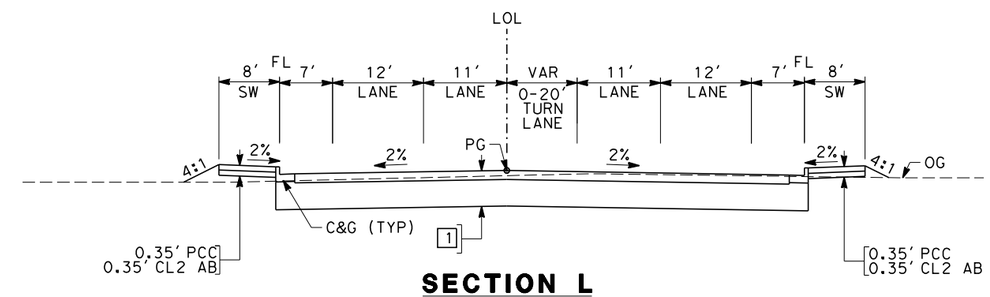

SECTION L

"FGF" 30+38.00 TO 33+08.00
"FGF" 33+92.00 TO 37+00.00
"FGF" 41+15.14 TO 42+60.11
"FGF" 43+17.11 TO 44+65.14

REV	DATE	BY	CHK	APP	DESCRIPTION

DESIGNED BY J. MONG
DRAWN BY E. SUDHAUSEN
CHECKED BY M. BAMM
IN CHARGE R. COFFIN
DATE 02/15/12

RECORD SET 15% DESIGN SUBMISSION - NOT FOR CONSTRUCTION

URS | HMM | ARUP
CALIFORNIA HIGH-SPEED TRAIN

CALIFORNIA HIGH-SPEED RAIL AUTHORITY

CALIFORNIA HIGH-SPEED TRAIN PROJECT
FRESNO TO BAKERSFIELD
FRESNO SUBSECTION
ALIGNMENT F1
ROADWAY / GRADE SEPARATION
TYPICAL CROSS SECTIONS

CONTRACT NO. HSR 06-0003
DRAWING NO. CT3003
SCALE NO SCALE
SHEET NO. 28 OF 28

eron.sudhausen 2/13/2012 8:26:53 PM \\global\americas\Jobs\S-F\131000\131577\4 Internal Project Data\4-03 Drawings\4-03-02 15% Redesign\4-03-02-05 Design Sheets\Highway\F1\FB-CT-3003-F1.dgn

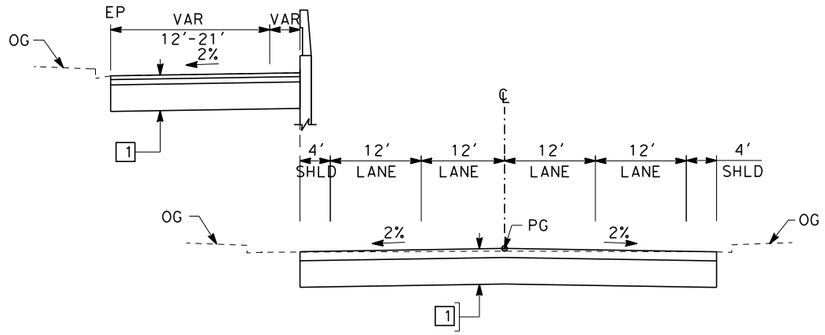

SECTION M

"STN" 12+71.87 TO 16+69.70

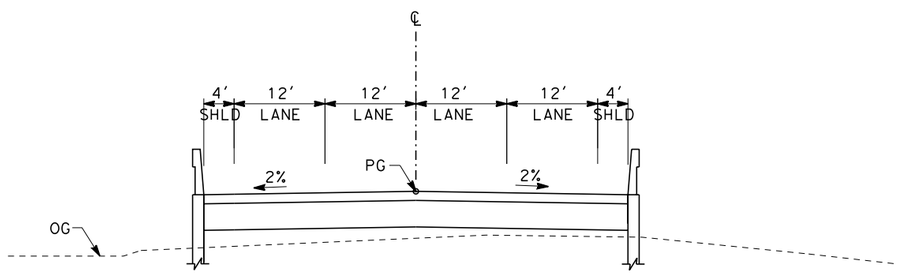

SECTION N

"STN" 16+69.70 TO 20+01.08
"STN" 27+96.08 TO 30+78.65

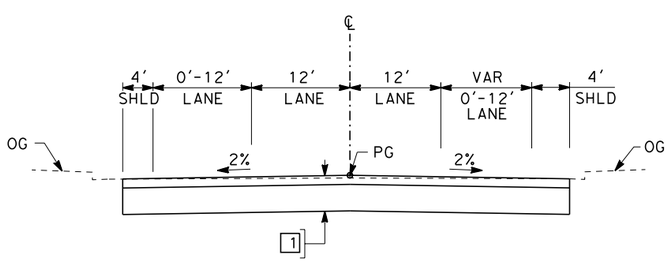

SECTION O

"STN" 30+78.65 TO 32+60.00

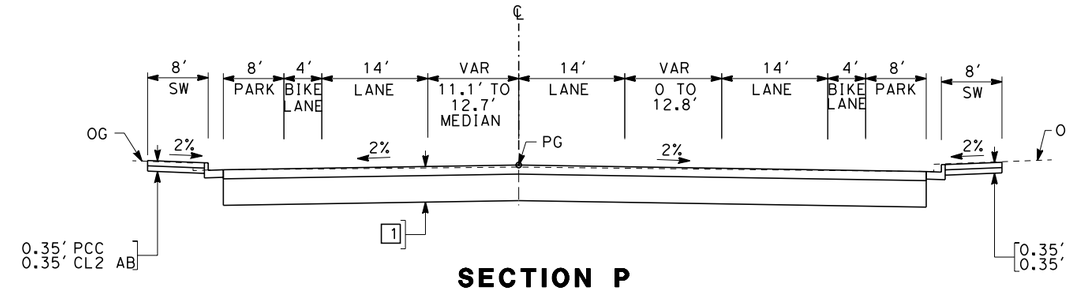

SECTION P

"TUO" 14+43.00 TO 17+57.62

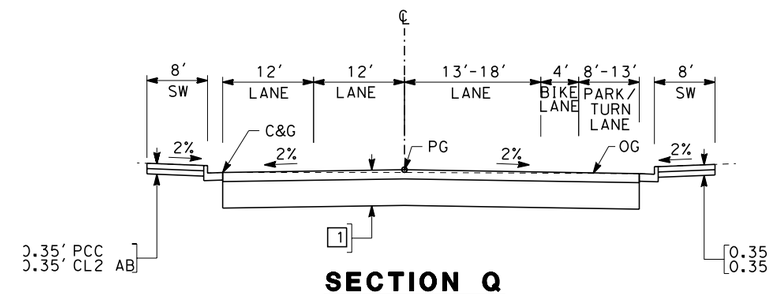

SECTION Q

"TUO" 25+05.49 TO 28+50.00

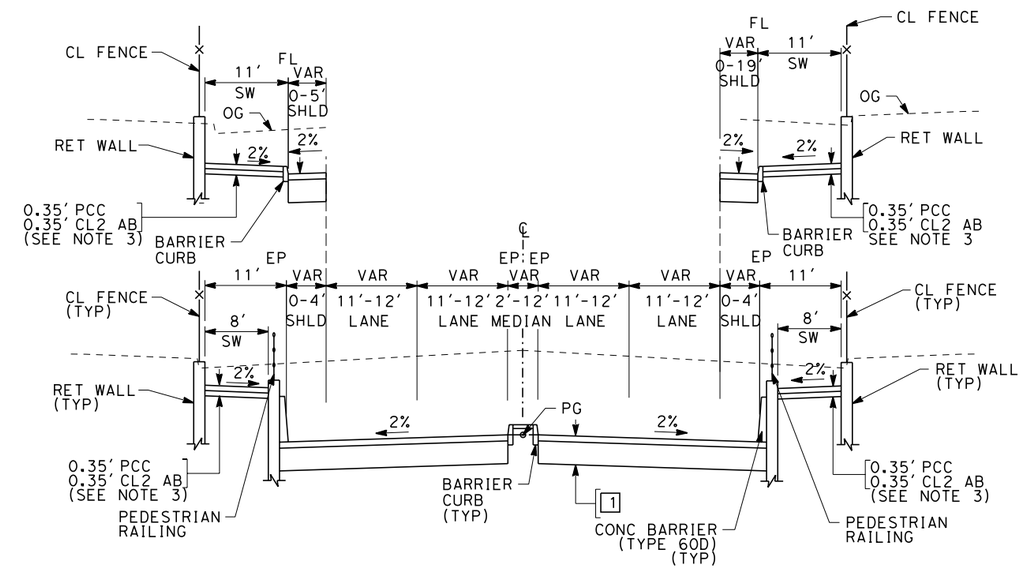

SECTION R

"VEN" 5+23.68 TO 23+37.61

REV	DATE	BY	CHK	APP	DESCRIPTION

DESIGNED BY J. NETTLETON
DRAWN BY V. ORTEGA
CHECKED BY B. RAWSON
IN CHARGE Q. EARLE
DATE 03/28/12

RECORD SET 15% DESIGN SUBMISSION - NOT FOR CONSTRUCTION

URS | HMM | ARUP
CALIFORNIA HIGH-SPEED TRAIN

CALIFORNIA HIGH-SPEED RAIL AUTHORITY

CALIFORNIA HIGH-SPEED TRAIN PROJECT
FRESNO TO BAKERSFIELD
FRESNO SUBSECTION
ALIGNMENT F1
ROADWAY / GRADE SEPARATION
TYPICAL CROSS SECTIONS

CONTRACT NO. HSR 06-0003
DRAWING NO. CT3004
SCALE AS SHOWN
SHEET NO.

ort52801 3/28/2012 3:41:11 PM CAHSRP-r1.tbl CHSR_PDF_half_black.pltG:_Sacramento\URS\235413 CA HSR Fresno Palmdale\16.0 Drawings\M-15% RBNSF Fresno\Sheet Files\Civil\CT3004.dgn

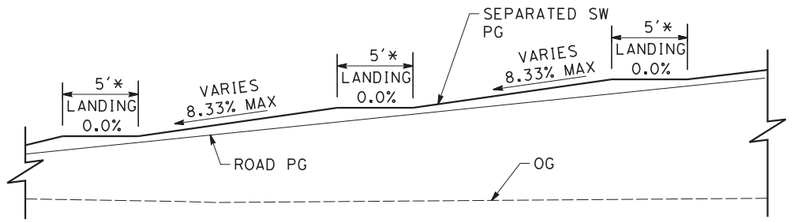

* PROVIDE 5' LANDING FOR EVERY 30" VERTICAL RISE (MAX).

SEPARATED SIDEWALK PROFILE DETAIL

SCALE: NO SCALE

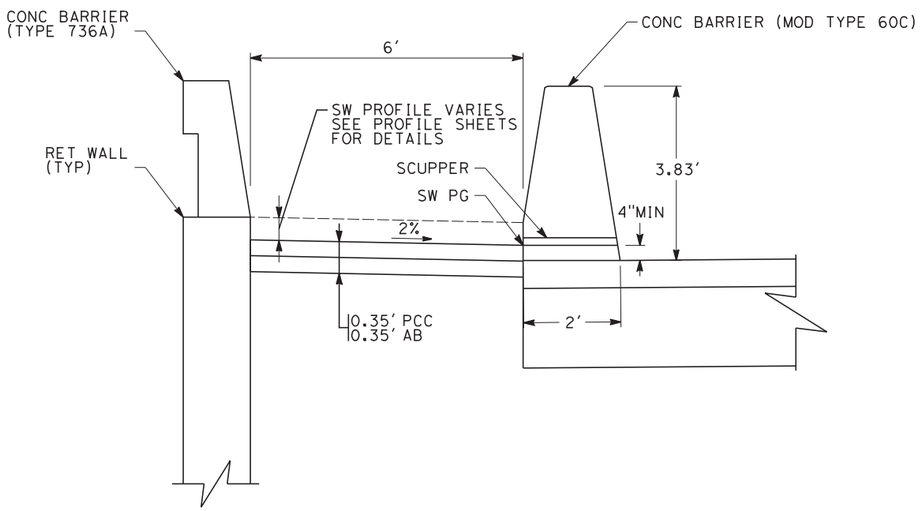

SEPARATED SIDEWALK SECTION DETAIL

SCALE: NO SCALE

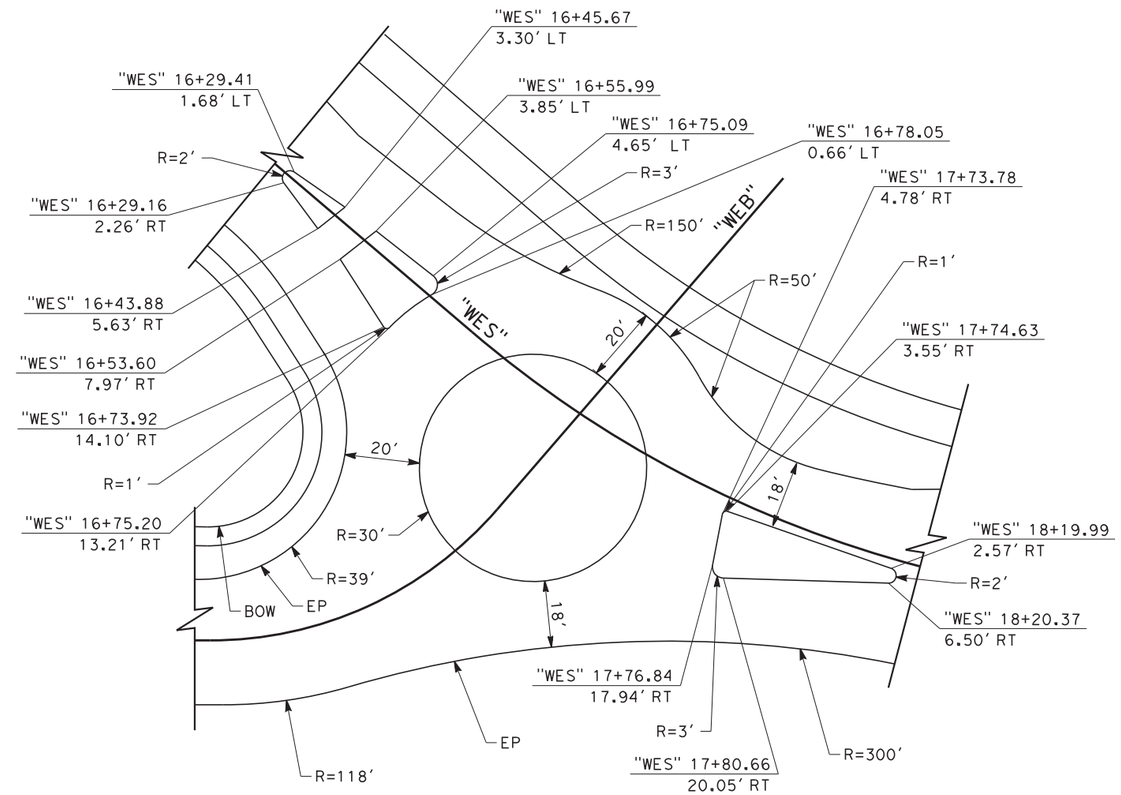

N WEST AVE TRAFFIC CIRCLE

SCALE: 1"=20'-0"

REV	DATE	BY	CHK	APP	DESCRIPTION

DESIGNED BY J. NETTLETON
DRAWN BY V. ORTEGA
CHECKED BY B. RAWSON
IN CHARGE Q. EARLE
DATE 12/08/11

PROPOSED PRELIMINARY DESIGN

NOT FOR CONSTRUCTION

URS | HMM | ARUP
CALIFORNIA HIGH-SPEED TRAIN

CALIFORNIA HIGH-SPEED RAIL AUTHORITY

CALIFORNIA HIGH-SPEED TRAIN PROJECT
SIERRA SUBDIVISION
PACKAGE 1A
ROADWAY
CONSTRUCTION DETAILS

CONTRACT NO.
DRAWING NO. CV-T5000
SCALE AS SHOWN
SHEET NO.

DEA54595 12/1/2011 4:00:27 PM CAHSRP-r1.tbl CHSR_PDF_half_black.pltG:_Sacramento\URS\235413 CA HSR Fresno Palmdale\16.0 Drawings\S1 HSR06-0003\Sheet Files\Package#1\Civil\S1-CV-T5000.dgn

LEGEND:

REMOVE BASE, SURFACING, & MINOR CONCRETE

PROPOSED TRAFFIC CIRCULATION

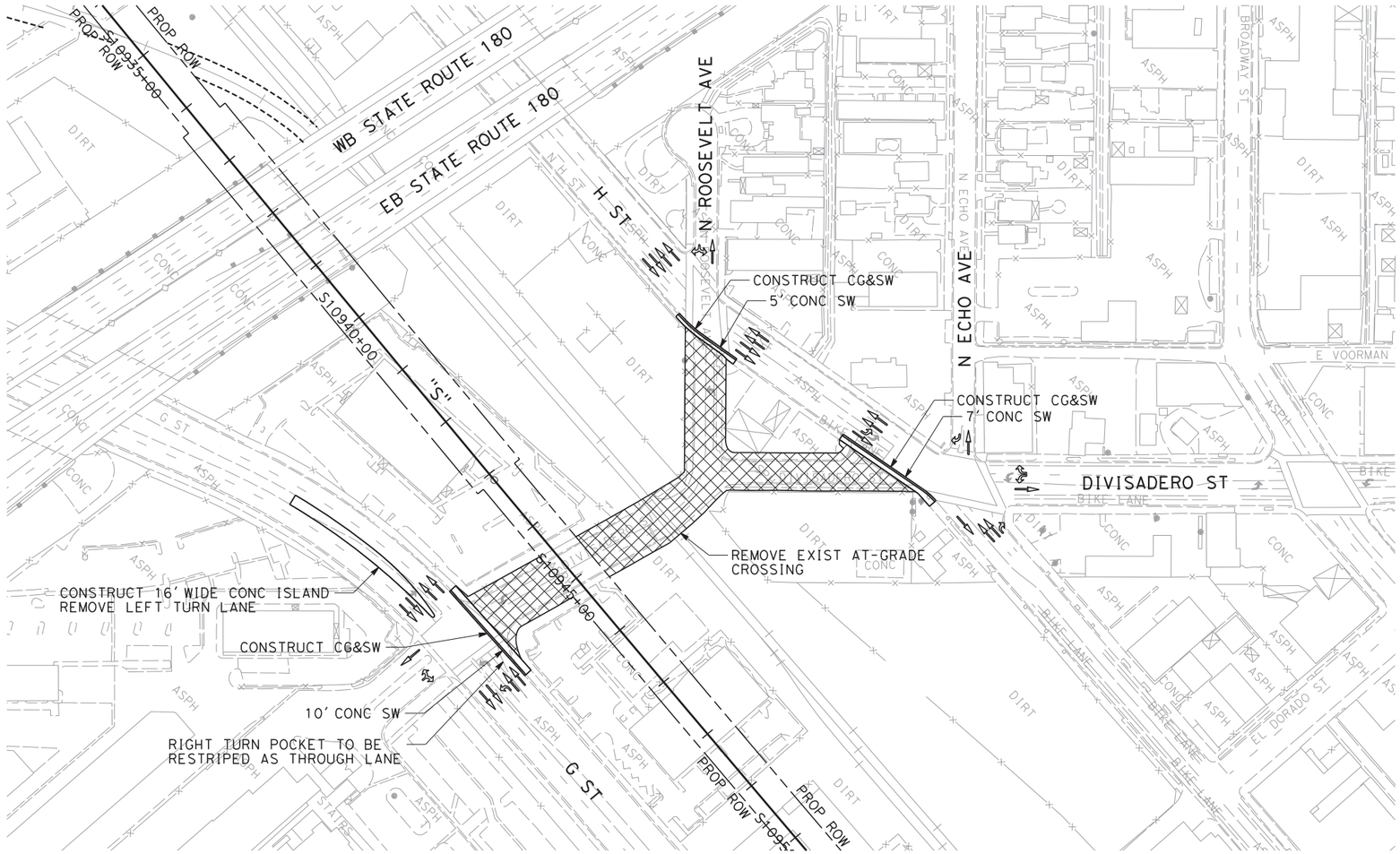

ROADWAY CLOSURE DETAIL

DIVISADERO ST

100 0 100 200

1"=100'

SCALE APPLICABLE FOR FULL SIZE ONLY

REV	DATE	BY	CHK	APP	DESCRIPTION

DESIGNED BY J. BINNING
DRAWN BY J. BINNING
CHECKED BY B. RAWSON
IN CHARGE O. EARLE
DATE 12/08/11

PROPOSED PRELIMINARY DESIGN

NOT FOR CONSTRUCTION

URS | HMM | ARUP
CALIFORNIA HIGH-SPEED TRAIN

CALIFORNIA HIGH-SPEED RAIL AUTHORITY

CALIFORNIA HIGH-SPEED TRAIN PROJECT
SIERRA SUBDIVISION
PACKAGE 1A
ROADWAY
ROADWAY CLOSURE DETAILS

CONTRACT NO.

DRAWING NO. CV-T5001

SCALE AS SHOWN

SHEET NO.

DEA54595 12/1/2011 4:00:29 PM CAHSRP-r1.tbl CHSR_PDF_half_black.pltG:_Sacramento\URS\235413 CA HSR Fresno Palmdale\16.0 Drawings\S1 HSR06-0003\Sheet Files\Package#1\Civil\S1-CV-T5001.dgn

PROFILE GRADE

NO SCALE

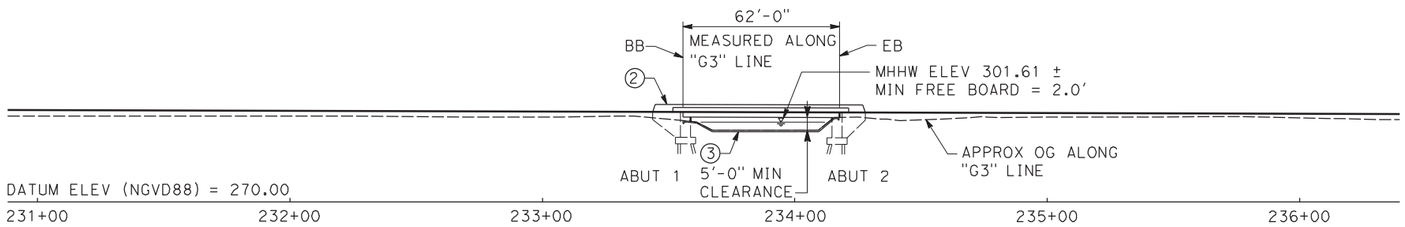

ELEVATION

SCALE: 1"=30'-0"

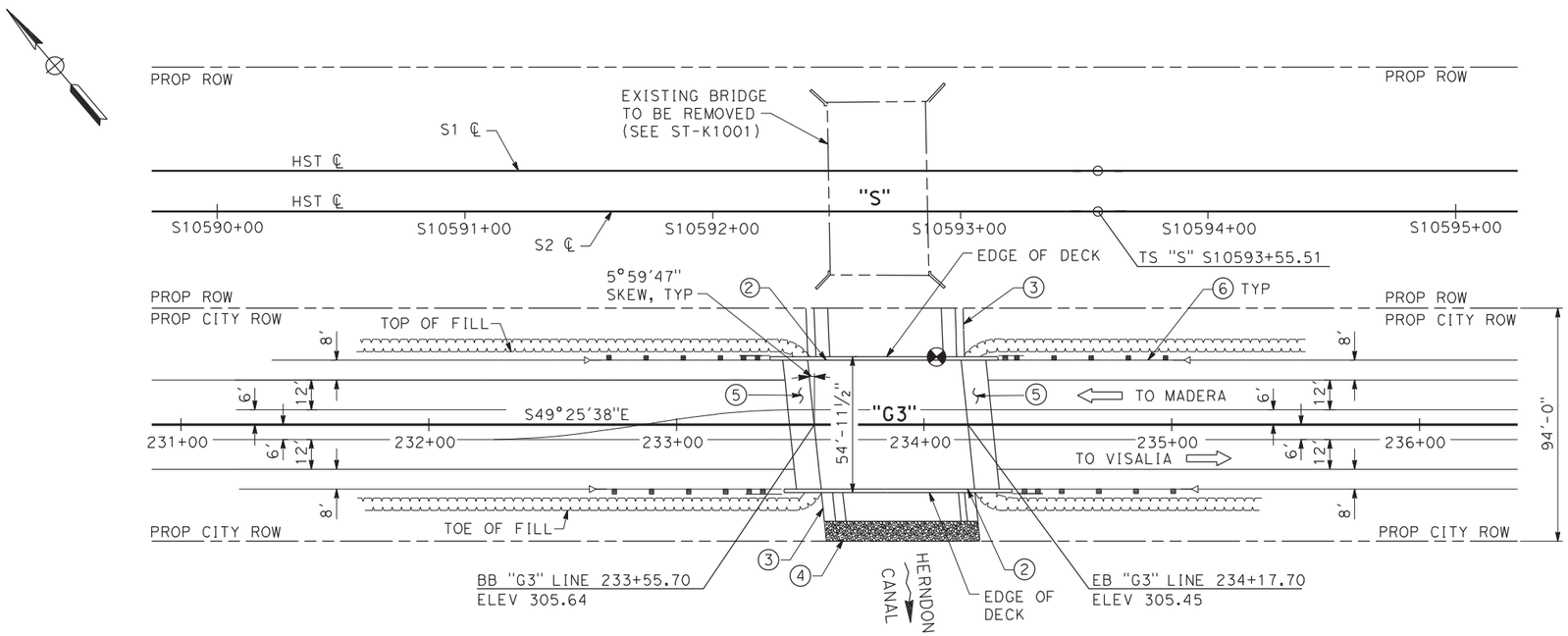

PLAN

SCALE: 1"=30'-0"

NOTES:

1. ROW SHOWN REPRESENTS THE MINIMUM ANTICIPATED ROW REQUIREMENTS. ACCURATE ROW AND ACCESS DATA WILL BE MADE AVAILABLE PRIOR TO NOTICE TO PROCEED.

(2) CONCRETE BARRIER (TYPE 736 MODIFIED)
(3) CONCRETE CHANNEL LINING
(4) ROCK SLOPE PROTECTION
(5) STRUCTURE APPROACH SLAB, TYPE EQ(10)
(6) METAL BEAM GUARD RAILING
(7) 14" DIA WATER LINE
(8) 4" DIA GAS LINE

LEGEND:

DIRECTION OF TRAFFIC
NEW CONSTRUCTION
EXISTING STRUCTURE
POINT OF MINIMUM VERTICAL CLEARANCE

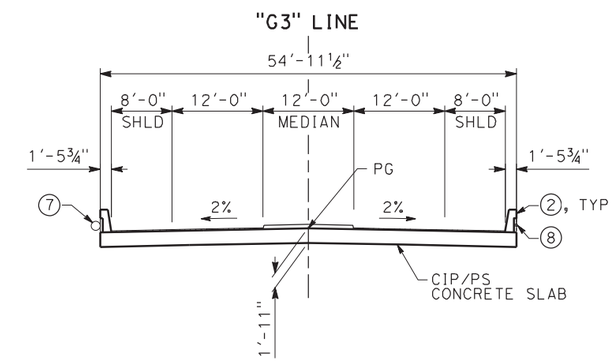

TYPICAL SECTION

SCALE: 1"=10'-0"

REV	DATE	BY	CHK	APP	DESCRIPTION

DESIGNED BY H. LEE
DRAWN BY E. CISNEROS
CHECKED BY T. DUDLEY
IN CHARGE D. MINISTER
DATE 02/01/2012

PROPOSED PRELIMINARY DESIGN

NOT FOR CONSTRUCTION

AECOM Technical Services, Inc.
2020 L Street, Suite 300
Sacramento, CA 95811
CH2MHILL

CALIFORNIA HIGH-SPEED RAIL AUTHORITY

CALIFORNIA HIGH-SPEED TRAIN PROJECT
SIERRA SUBDIVISION
PACKAGE 1A
ROADWAY
GOLDEN STATE BLVD BRIDGE AT HERNDON CANAL
GENERAL PLAN

CONTRACT NO.
DRAWING NO. ST-I1001
SCALE AS SHOWN
SHEET NO.

cisnerose 2/13/2012 2:48:20 PM cansrp-r1.tbl chsr_half_black.plt \\usscr1fp001\Cadd\CHSR\60022962\Task-03_Merced-Fresno\CADD\Struct\Sheet\1S-ST-I1001.dgn

NOTES:

1. ROW SHOWN REPRESENTS THE MINIMUM ANTICIPATED ROW REQUIREMENTS. ACCURATE ROW AND ACCESS DATA WILL BE MADE AVAILABLE PRIOR TO NOTICE TO PROCEED.

(2) CONCRETE BARRIER (TYPE 736 MODIFIED)

(3) CIP/PS CONCRETE SLAB

(4) ¾" POLYESTER CONCRETE OVERLAY

(5) 14" DIA WATER LINE

(6) 4" DIA GAS LINE

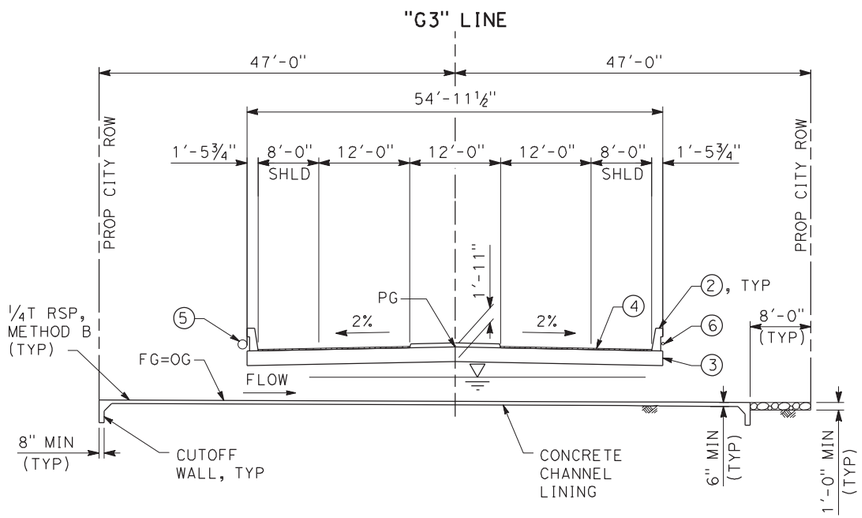

SECTION AT MID-SPAN

SCALE: 1"= 10'-0"

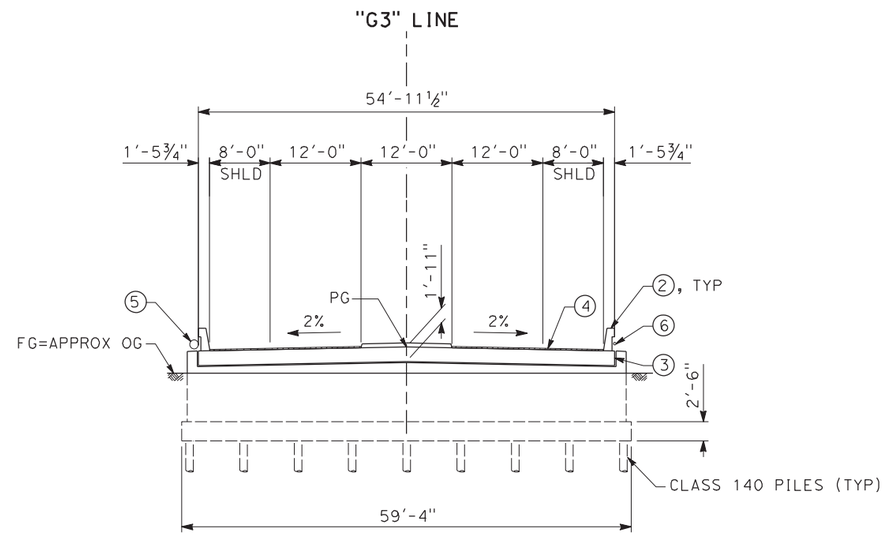

SECTION AT ABUTMENT 2

SCALE: 1"= 10'-0"

REV	DATE	BY	CHK	APP	DESCRIPTION

DESIGNED BY H. LEE
DRAWN BY E. CISNEROS
CHECKED BY T. DUDLEY
IN CHARGE D. MINISTER
DATE 02/01/2012

PROPOSED PRELIMINARY DESIGN

NOT FOR CONSTRUCTION

AECOM Technical Services, Inc.
2020 L Street, Suite 300
Sacramento, CA 95811
CH2MHILL

CALIFORNIA HIGH-SPEED RAIL AUTHORITY

CALIFORNIA HIGH-SPEED TRAIN PROJECT
SIERRA SUBDIVISION
PACKAGE 1A
ROADWAY
GOLDEN STATE BLVD BRIDGE AT HERNDON CANAL
TYPICAL SECTIONS

CONTRACT NO.
DRAWING NO. ST-I1002
SCALE AS SHOWN
SHEET NO.

cisnerose 2/20/2012 12:18:40 PM cahsrp-r1.tbl chsr_half_black.plt \\usscr1fp001\Cadd\CHSR\60022962\Task-03_Merced-Fresno\CADD\Struct\Sheet\1S-ST-I1002.dgn

NOTES:

1. ROW SHOWN REPRESENTS THE MINIMUM ANTICIPATED ROW REQUIREMENTS. ACCURATE ROW AND ACCESS DATA WILL BE MADE AVAILABLE PRIOR TO NOTICE TO PROCEED.
2. EXISTING BRIDGE AND UTILITY ARE APPROXIMATE.
3. EXISTING UNDERGROUND AND OVERHEAD UTILITIES TO BE DETERMINED.

LEGEND:

- BOTTOM OF FOOTING ELEVATION
- PC/PS PILE
- EXISTING STRUCTURE

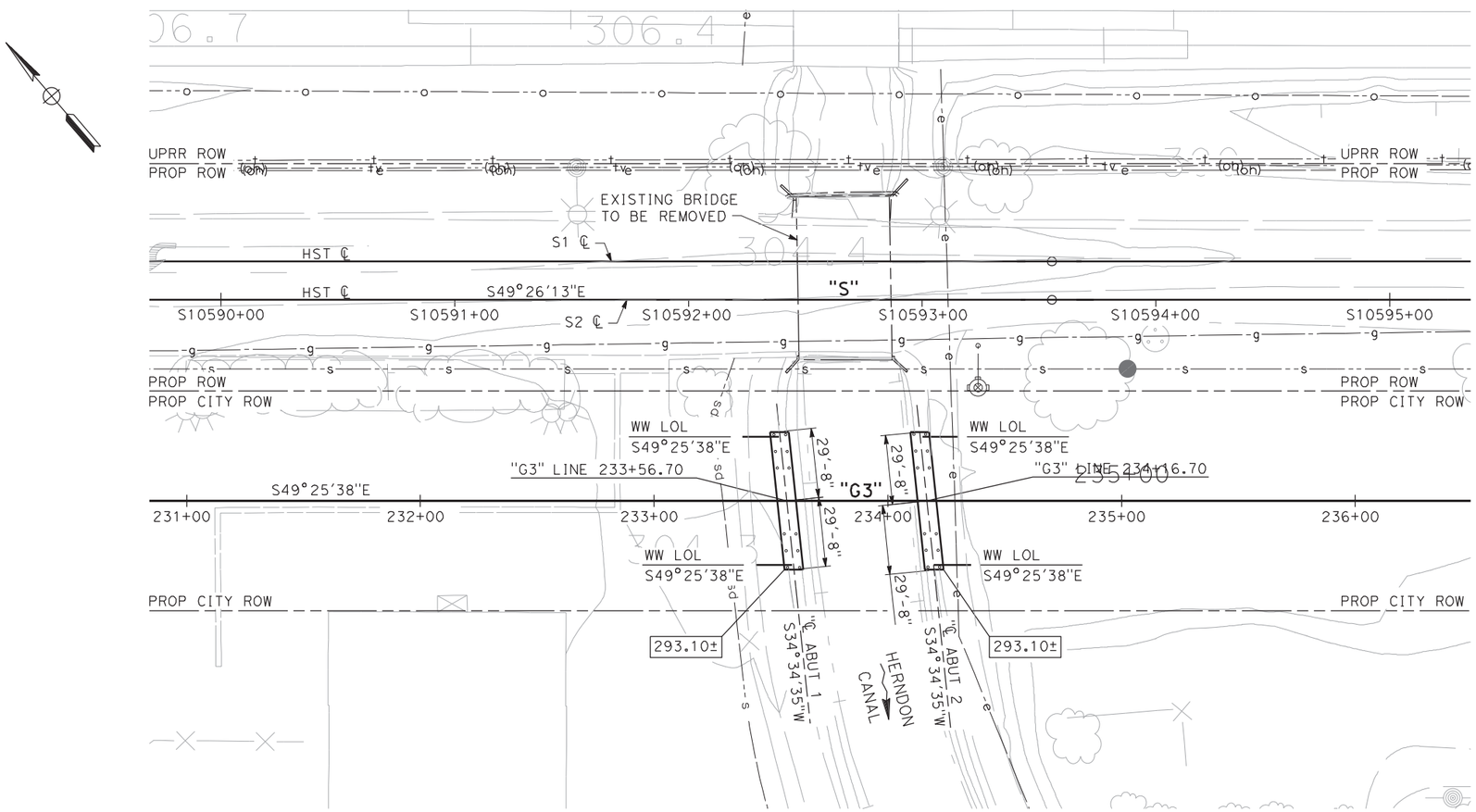

PLAN
SCALE: 1"=30'-0"

REV	DATE	BY	CHK	APP	DESCRIPTION

DESIGNED BY H. LEE
DRAWN BY E. CISNEROS
CHECKED BY T. DUDLEY
IN CHARGE D. MINISTER
DATE 12/08/11

PROPOSED PRELIMINARY DESIGN

NOT FOR CONSTRUCTION

AECOM Technical Services, Inc.
2020 L Street, Suite 300
Sacramento, CA 95811
CH2MHILL

CALIFORNIA HIGH-SPEED RAIL AUTHORITY

CALIFORNIA HIGH-SPEED TRAIN PROJECT
SIERRA SUBDIVISION
PACKAGE 1A
ROADWAY
GOLDEN STATE BLVD BRIDGE AT HERNDON CANAL
FOUNDATION PLAN

CONTRACT NO.
DRAWING NO. ST-11003
SCALE AS SHOWN
SHEET NO.

cisnerose 11/30/2015:26:01 PM cahsrp-r1.tbl chsr_half_black.plt \\usscr1fp001\Cadd\CHSR\60022962\Task-03_Merced-Fresno\cadd\Struct\Sheet\1S-ST-11003.dgn

PROFILE GRADE

NO SCALE

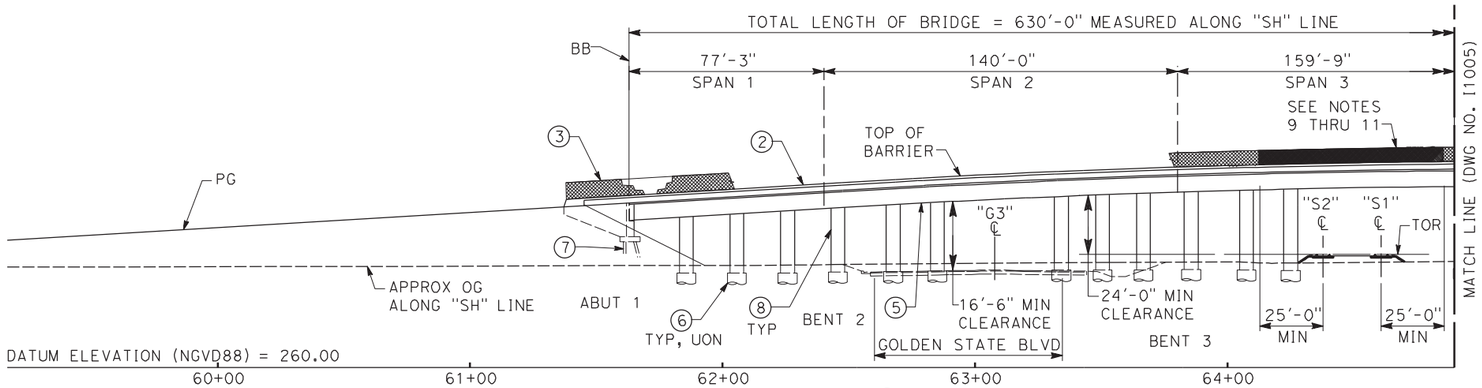

ELEVATION

SCALE: 1"=30'-0"

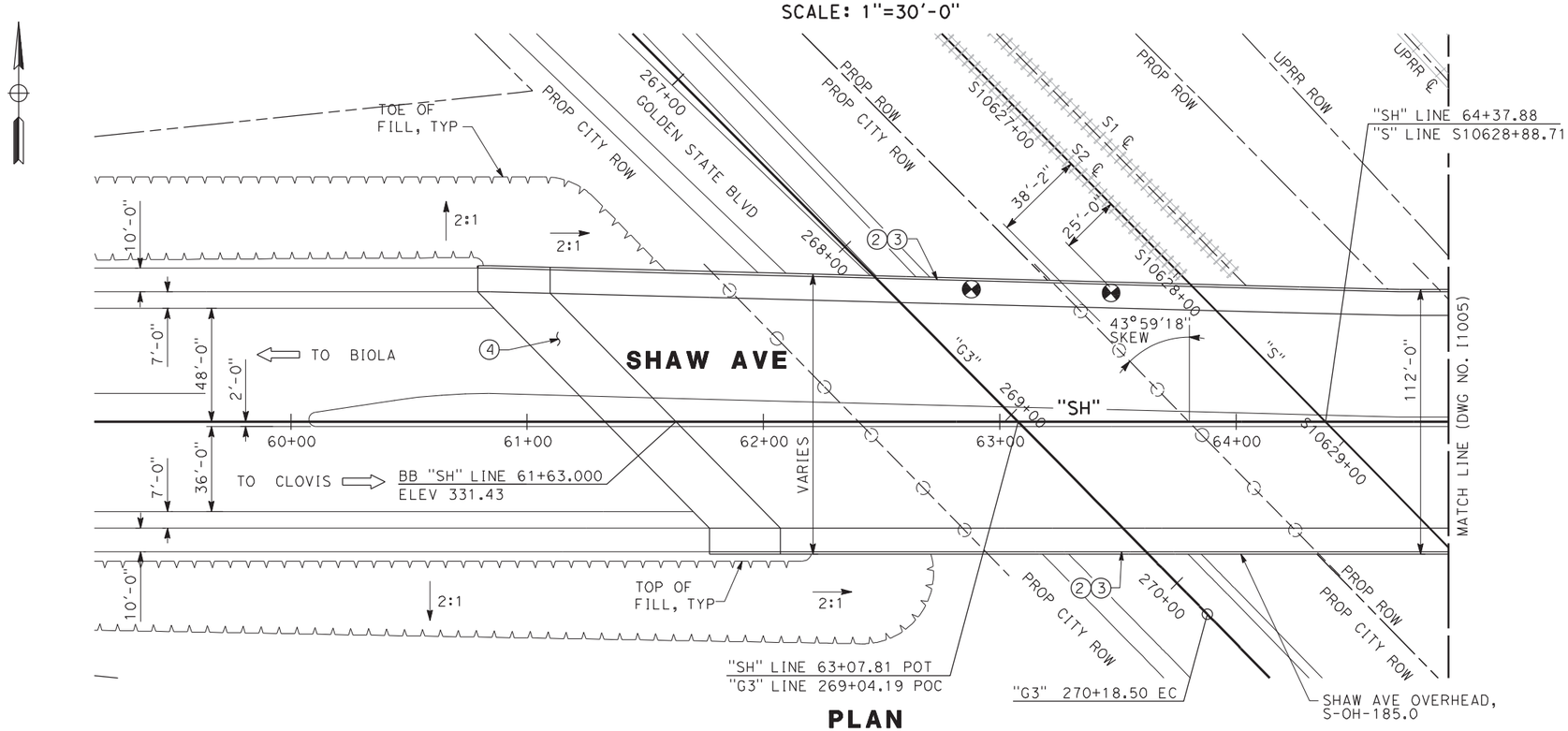

PLAN

SCALE: 1"=30'-0"

NOTES:

1. ROW SHOWN REPRESENTS THE MINIMUM ANTICIPATED ROW REQUIREMENTS. ACCURATE ROW AND ACCESS DATA WILL BE MADE AVAILABLE PRIOR TO NOTICE TO PROCEED.

(2) CONCRETE BARRIER (TYPE 26 MODIFIED)
(3) AR FENCE
(4) STRUCTURE APPROACH, TYPE N(30S)
(5) CIP/PS CONCRETE BOX GIRDER
(6) 7'-6" DIA CIDH PILE
(7) PC CONC PILE
(8) 5'-6" DIA CONCRETE COLUMN

9. AR FENCE SHALL BE PROVIDED AS INDICATED ON THE ELEVATION VIEW ON BOTH SIDES OF THE OVERHEAD STRUCTURE IN ALL NEW EXISTING STRUCTURES.
10. SOLID PLATE SHALL BE MOUNTED ON RIGID TRAFFIC BARRIER AND PROPERLY ATTACHED TO THE AR FENCE.
11. AR FENCE WITH SOLID PLATE SHALL EXTEND 25 FEET FROM CENTERLINE OF THE OUTER MOST TRACKS.
12. FOR UTILITY INFORMATION, SEE UTILITY BASE MAP PLANS.
13. EXISTING UPRR ROW TO BE CONFIRMED ON SITE.

LEGEND:

- DIRECTION OF TRAFFIC
- POINT OF MINIMUM VERTICAL CLEARANCE
- RAILROAD AND HIGH-SPEED TRAIN TRACK
- NEW CONSTRUCTION
- TOR — TOP OF RAIL
- HST — HIGH SPEED TRAIN

REV	DATE	BY	CHK	APP	DESCRIPTION

DESIGNED BY H. LEE
DRAWN BY E. CISNEROS
CHECKED BY T. DUDLEY
IN CHARGE D. MINISTER
DATE 02/01/2012

PROPOSED PRELIMINARY DESIGN

NOT FOR CONSTRUCTION

AECOM Technical Services, Inc.
2020 L Street, Suite 300
Sacramento, CA 95811
CH2MHILL

CALIFORNIA HIGH-SPEED RAIL AUTHORITY

CALIFORNIA HIGH-SPEED TRAIN PROJECT
SIERRA SUBDIVISION
PACKAGE 1A
ROADWAY
SHAW AVE OVERHEAD
GENERAL PLAN NO. 1

CONTRACT NO.
DRAWING NO. ST-I1004
SCALE AS SHOWN
SHEET NO.

cisnerose 2/14/2012 11:24:12 AM cahsrp-r1.tbl chsr_half_black.plt \\usscr1fp001\Cadd\CHSR\60022962\Task-03_Merced-Fresno\CADD\Struct\Sheet\1S-ST-I1004.dgn

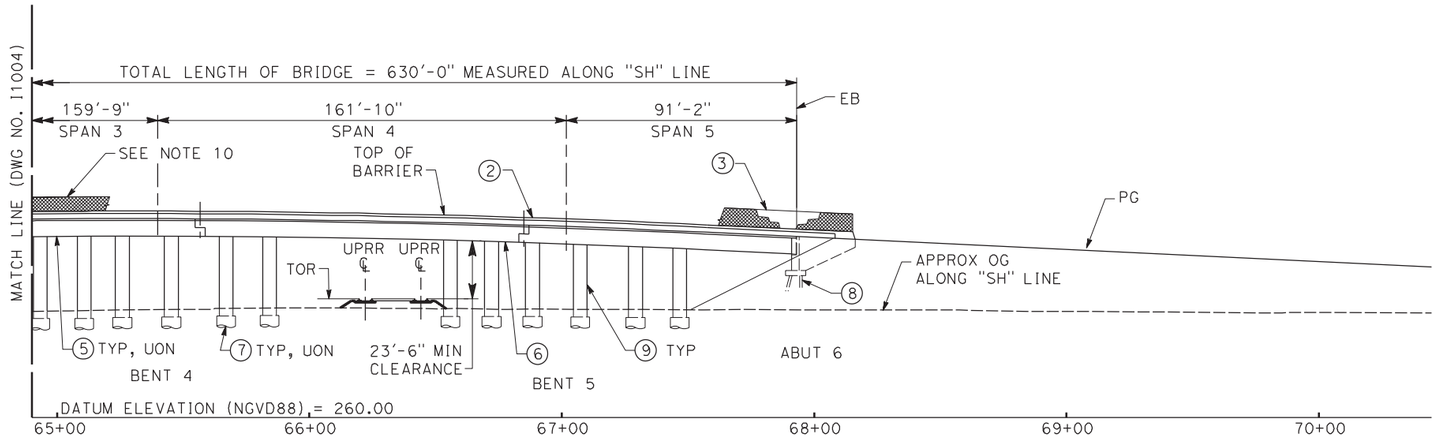

ELEVATION

SCALE: 1"=30'-0"

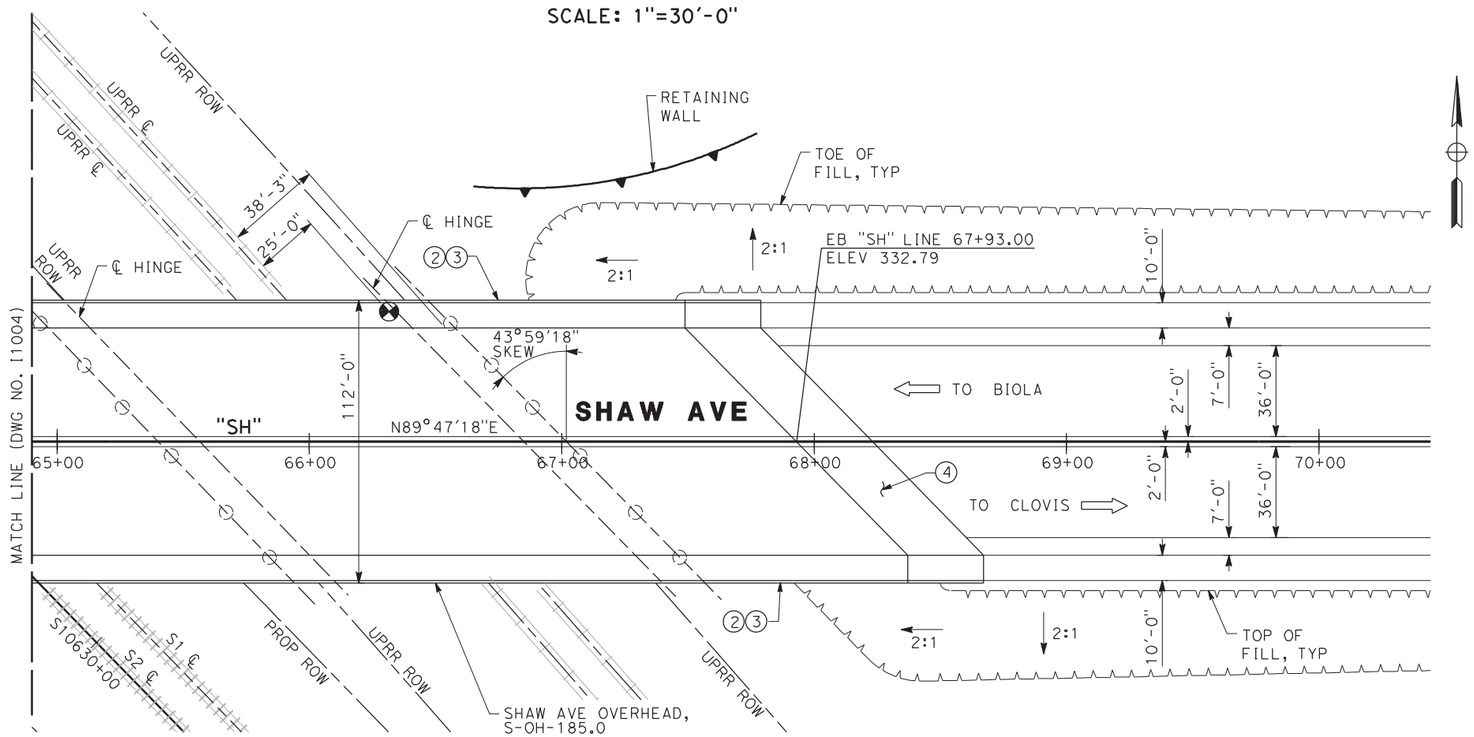

PLAN

SCALE: 1"=30'-0"

NOTES:

1. ROW SHOWN REPRESENTS THE MINIMUM ANTICIPATED ROW REQUIREMENTS. ACCURATE ROW AND ACCESS DATA WILL BE MADE AVAILABLE PRIOR TO NOTICE TO PROCEED.

(2) CONCRETE BARRIER (TYPE 26 MODIFIED)
(3) AR FENCE
(4) STRUCTURE APPROACH, TYPE N(30S)
(5) CIP/PS CONCRETE BOX GIRDER
(6) PC/PS BULB-TEE GIRDER
(7) 7'-6" DIA CIDH PILE
(8) PC CONC PILE
(9) 5'-6" DIA CONCRETE COLUMN

10. AR FENCE SHALL BE PROVIDED AS INDICATED ON THE ELEVATION VIEW ON BOTH SIDES OF THE OVERHEAD STRUCTURE IN ALL NEW EXISTING STRUCTURES.
11. FOR UTILITY INFORMATION, SEE UTILITY BASE MAP PLANS.
12. EXISTING UPRR ROW TO BE CONFIRMED ON SITE.

LEGEND:

- DIRECTION OF TRAFFIC
- POINT OF MINIMUM VERTICAL CLEARANCE
- RAILROAD AND HIGH-SPEED TRAIN TRACK
- NEW CONSTRUCTION
- TOR — TOP OF RAIL
- HST — HIGH SPEED TRAIN

REV	DATE	BY	CHK	APP	DESCRIPTION

DESIGNED BY H. LEE
DRAWN BY E. CISNEROS
CHECKED BY T. DUDLEY
IN CHARGE D. MINISTER
DATE 02/01/2012

PROPOSED PRELIMINARY DESIGN

NOT FOR CONSTRUCTION

AECOM Technical Services, Inc.
2020 L Street, Suite 300
Sacramento, CA 95811
CH2MHILL

CALIFORNIA HIGH-SPEED RAIL AUTHORITY

CALIFORNIA HIGH-SPEED TRAIN PROJECT
SIERRA SUBDIVISION
PACKAGE 1A
ROADWAY
SHAW AVE OVERHEAD
GENERAL PLAN NO. 2

CONTRACT NO.
DRAWING NO. ST-I1005
SCALE AS SHOWN
SHEET NO.

cisnerose 2/14/2012 11:31:03 AM cahsrp-r1.tbl chsr_half_black.plt \\usscr1fp001\Cadd\CHSR\60022962\Task-03_Merced-Fresno\CADD\Struct\Sheet\1S-ST-I1005.dgn

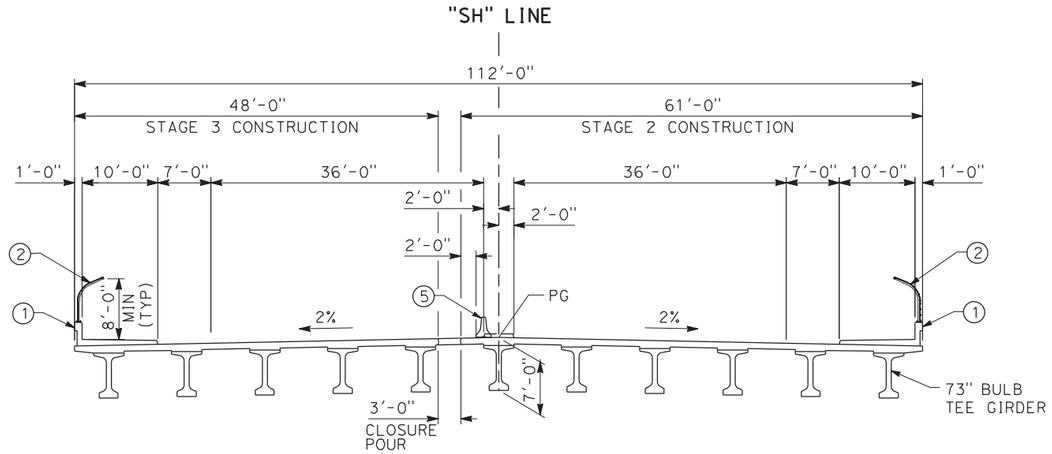

SPAN 4 TYPICAL SECTION

SCALE: 1"=10'-0"

NOTES:

1. CONCRETE BARRIER (TYPE 26 MODIFIED)
2. AR FENCE
3. 5'-6" DIA CONCRETE COLUMN
4. 7'-6" DIA CIDH PILE
5. TEMPORARY RAILING TYPE K
6. AR FENCE SHALL BE PROVIDED AS INDICATED ON THE CROSS SECTIONS VIEWS ON BOTH SIDES OF THE OVERHEAD STRUCTURE IN ALL NEW EXISTING STRUCTURES.

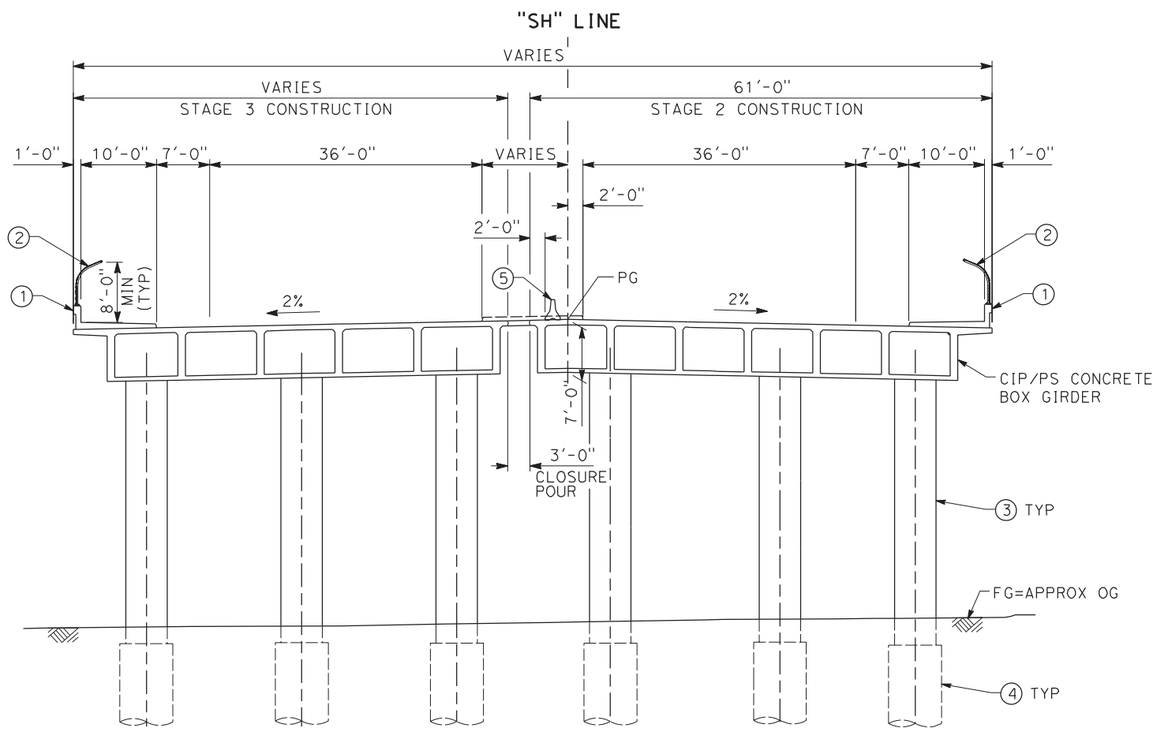

SPANS 1 THRU 3 TYPICAL SECTION

SCALE: 1"=10'-0"

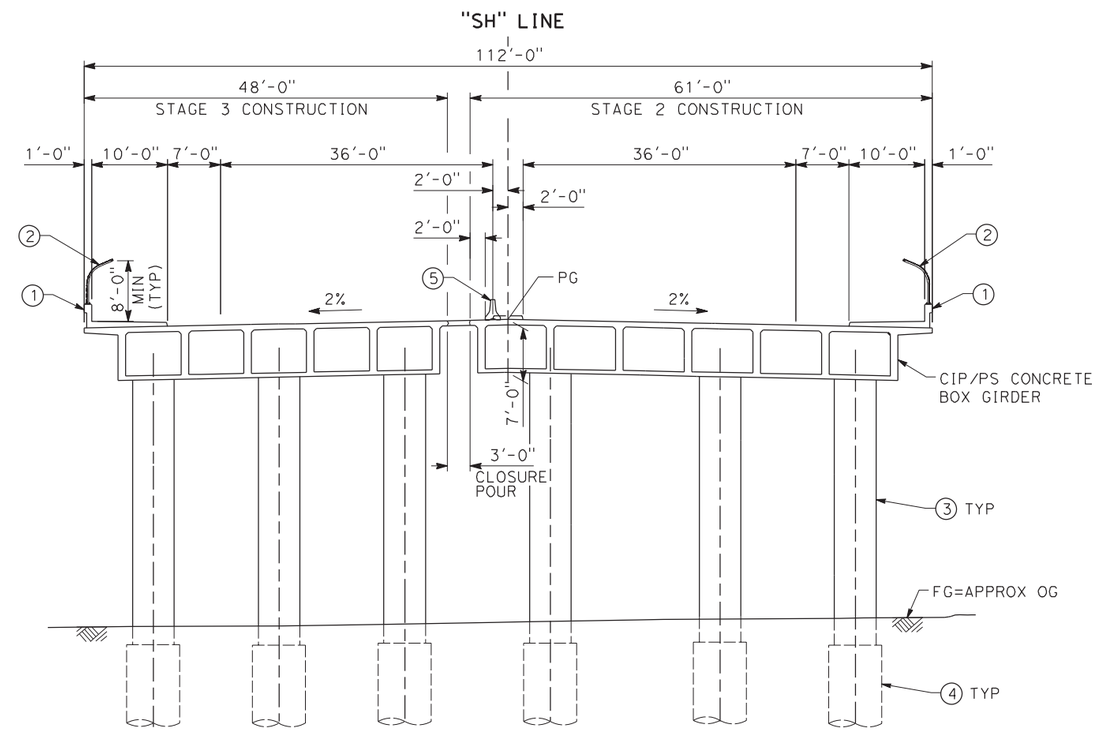

SPAN 5 TYPICAL SECTION

SCALE: 1"=10'-0"

REV	DATE	BY	CHK	APP	DESCRIPTION

DESIGNED BY H. LEE
DRAWN BY E. CISNEROS
CHECKED BY T. DUDLEY
IN CHARGE D. MINISTER
DATE 12/08/11

PROPOSED PRELIMINARY DESIGN

NOT FOR CONSTRUCTION

AECOM Technical Services, Inc.
2020 L Street, Suite 300
Sacramento, CA 95811
CH2MHILL

CALIFORNIA HIGH-SPEED RAIL AUTHORITY

CALIFORNIA HIGH-SPEED TRAIN PROJECT
SIERRA SUBDIVISION
PACKAGE 1A
ROADWAY
SHAW AVENUE OVERHEAD
TYPICAL SECTIONS

CONTRACT NO.
DRAWING NO. ST-I1006
SCALE AS SHOWN
SHEET NO.

cisnerose 11/30/2011 5:32:20 PM cahsrp-r1.tbl chsr_half_black.plt \\usscr1fp001\Cadd\CHSR\60022962\Task-03_Merced-Fresno\cadd\Struct\Sheet\1S-ST-I1006.dgn

CURVE DATA: Ⓐ

R = 30000.00′
Δ = 5°14′53"
T = 1727.64′
L = 2747.93′

LEGEND:

BOTTOM OF FOOTING ELEVATION
PC/PS PILE
CIDH PILE

NOTES:

1. ROW SHOWN REPRESENTS THE MINIMUM ANTICIPATED ROW REQUIREMENTS. ACCURATE ROW AND ACCESS DATA WILL BE MADE AVAILABLE PRIOR TO NOTICE TO PROCEED.
2. EXISTING BRIDGE AND UTILITY ARE APPROXIMATE.
3. EXISTING UNDERGROUND AND OVERHEAD UTILITIES TO BE DETERMINED.

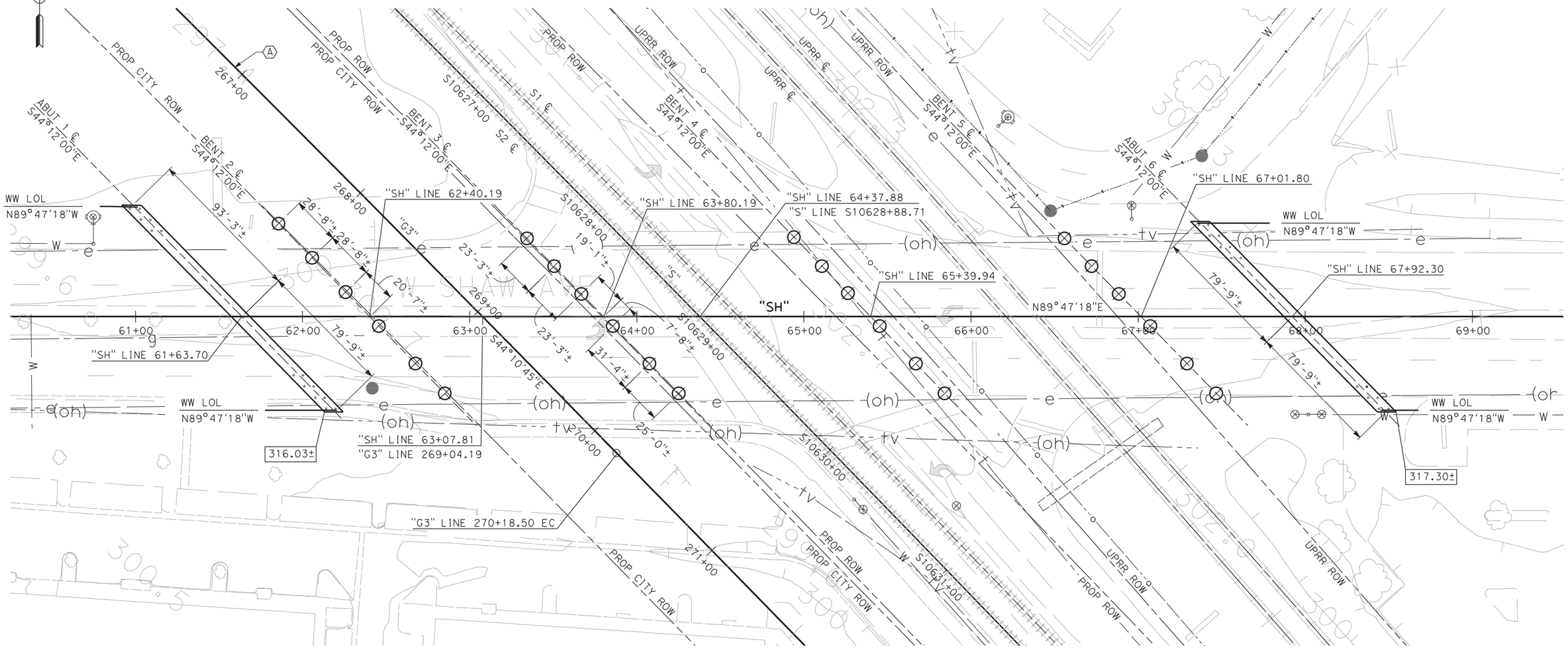

PLAN
SCALE: 1"=30′-0"

REV	DATE	BY	CHK	APP	DESCRIPTION

DESIGNED BY H. LEE
DRAWN BY E. CISNEROS
CHECKED BY T. DUDLEY
IN CHARGE D. MINISTER
DATE 12/08/11

PROPOSED PRELIMINARY DESIGN

NOT FOR CONSTRUCTION

AECOM Technical Services, Inc.
2020 L Street, Suite 300
Sacramento, CA 95811
CH2MHILL

CALIFORNIA HIGH-SPEED RAIL AUTHORITY

CALIFORNIA HIGH-SPEED TRAIN PROJECT
SIERRA SUBDIVISION
PACKAGE 1A
ROADWAY
SHAW AVENUE OVERHEAD
FOUNDATION PLAN

CONTRACT NO.
DRAWING NO. ST-I1007
SCALE AS SHOWN
SHEET NO.

cisnerose 11/30/2011 5:43:30 PM cahsrp-r1.tbl chsr_half_black.plt \\uss1fp001\Cadd\CHSR\60022962\Task-03_Merced-Fresno\cadd\Struct\Sheet\1S-ST-I1007.dgn

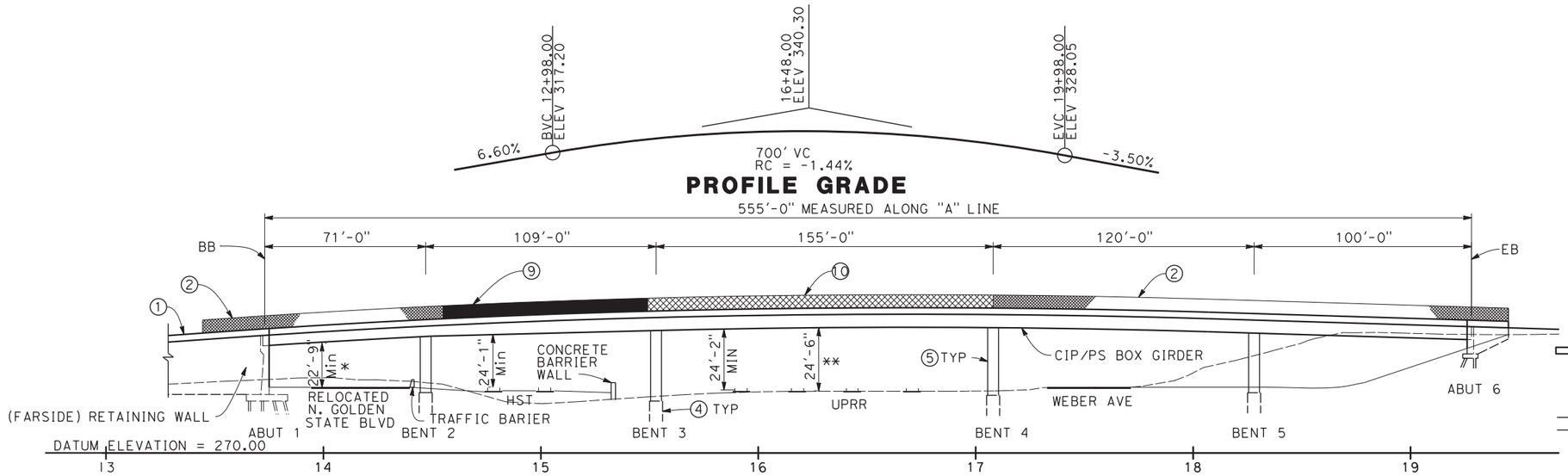

PROFILE GRADE

ELEVATION

SCALE: 1" = 30'

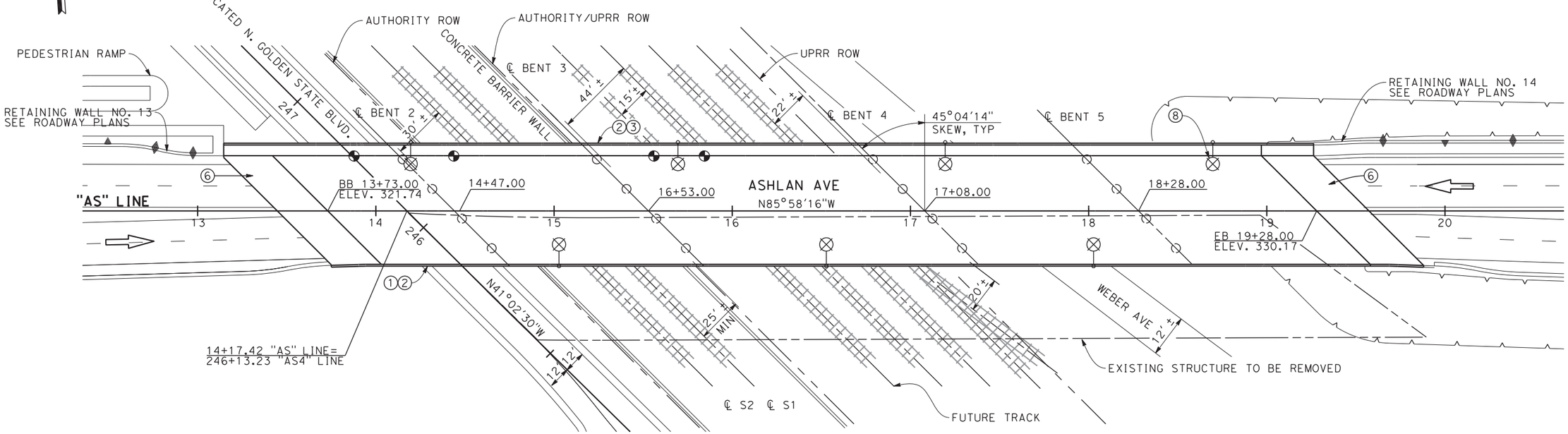

PLAN

SCALE: 1" = 30'

NOTES:

1. CONCRETE BARRIER (TYPE 26 MODIFIED)
2. CHAIN LINK RAILING (TYPE 7 MODIFIED)
3. CONCRETE BARRIER (TYPE 736 MODIFIED)
4. 6'-0" DIA CIDH PILE
5. 5'-6" DIA COLUMN
6. STRUCTURE APPROACH, TYPE N(30S)
7. EXISTING UPRR ROW TO BE CONFIRMED ON SITE
8. ELECTROLIERS
9. AR FENCE WITH SOLID PLATE
10. AR FENCE

LEGEND:

- INDICATES DIRECTION OF TRAFFIC
- INDICATES APPROXIMATE POINT OF MINIMUM VERTICAL CLEARANCE
- INDICATES RAILROAD AND HIGH-SPEED TRAIN TRACK
- * TEMPORARY FALSEWORK CLEARANCE = 20'-10" FALSEWORK DEPTH = 1'-10 1/2"
- ** TEMPORARY FALSEWORK CLEARANCE = 21'-2" FALSEWORK DEPTH = 3'-5"

REV	DATE	BY	CHK	APP	DESCRIPTION

DESIGNED BY D. FREDERICKS
DRAWN BY P. WALKER
CHECKED BY H. STRANDGAARD
IN CHARGE F. NOBARI
DATE 2/17/12

PROPOSED PRELIMINARY DESIGN

NOT FOR CONSTRUCTION

AECOM Technical Services, Inc.
2020 L Street, Suite 300
Sacramento, CA 95811

CH2MHILL

CALIFORNIA HIGH-SPEED RAIL AUTHORITY

CALIFORNIA HIGH-SPEED TRAIN PROJECT
MERCED TO FRESNO
PACKAGE 1A
ROADWAY
ASHLAN AVE OVERHEAD
GENERAL PLAN

CONTRACT NO.
DRAWING NO. ST-I1008
SCALE AS SHOWN
SHEET NO.

pwalker 2/16/2012 10:16:43 AM CAHSRP-R1.TBL CHSR_half_black.plt C:\Users\pwalker\Documents\NDMProj\356751 - California High Speed Rail - SR99 Improvements\X-1S-ST-K1001-R99.DGN

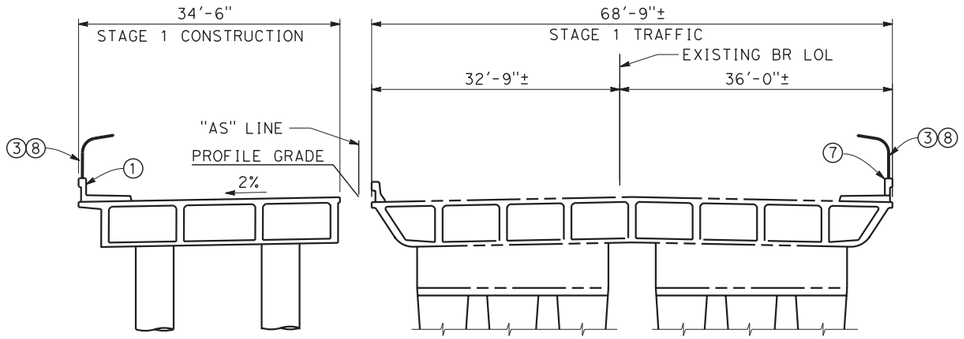

STAGE 1
SCALE: 1"=10'

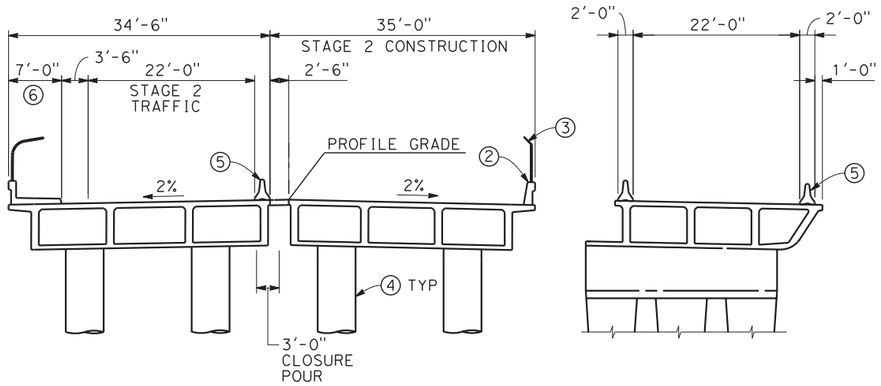

STAGE 2
SCALE: 1"=10'

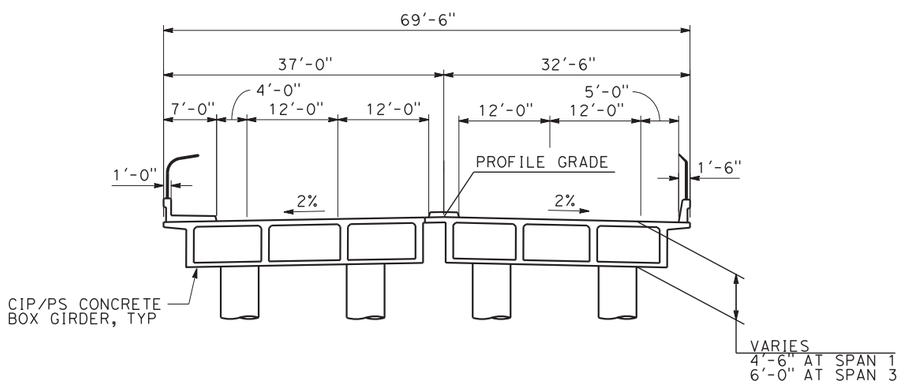

FINAL
SCALE: 1"=10'

NOTES:

1. CONCRETE BARRIER (TYPE 26 MODIFIED)
2. CONCRETE BARRIER (TYPE 736 MODIFIED)
3. CHAIN LINK RAILING (TYPE 7 MODIFIED)
4. 5'-6" DIA CONCRETE COLUMN
5. TEMPORARY RAILING TYPE K
6. PEDESTRIAN WALKWAY
7. EXISTING BARRIER
8. AR FENCE

STAGING NOTES:

STAGE 1:

CONSTRUCT NORTH PORTION OF ASHLAN OVERHEAD.

STAGE 2:

SHIFT ASHLAN AVE WB TRAFFIC TO NEWLY CONSTRUCTED NORTH PORTION OF OVERHEAD.

REMOVE NORTH PORTION OF EXISTING OVERHEAD.

CONSTRUCT SOUTH PORTION OF OVERHEAD.

FINAL STAGE:

SHIFT EB TRAFFIC TO NEW OVERHEAD.

REMOVE REMAINING SOUTH PORTION OF EXISTING OVERHEAD.

REV	DATE	BY	CHK	APP	DESCRIPTION

DESIGNED BY D. FREDERICKS
DRAWN BY P. WALKER
CHECKED BY H. STRANDGAARD
IN CHARGE F. NOBARI
DATE 2/17/12

PROPOSED PRELIMINARY DESIGN

NOT FOR CONSTRUCTION

AECOM Technical Services, Inc.
2020 L Street, Suite 300
Sacramento, CA 95811
CH2MHILL

CALIFORNIA HIGH-SPEED RAIL AUTHORITY

CALIFORNIA HIGH-SPEED TRAIN PROJECT
MERCED TO FRESNO
PACKAGE 1A
ROADWAY
ASHLAN AVE OVERHEAD
TYPICAL SECTION

CONTRACT NO.
DRAWING NO. ST-I1009
SCALE AS SHOWN
SHEET NO.

pwalker 2/15/2012 5:06:43 PM CAHSRP-R1.TBL CHSR_half_black.plt C:\Users\pwalker\Documents\NDMProj\356751 - California High Speed Rail - SR99 Improvements\X-1S-ST-K1002-R99.DGN

PILE DATA TABLE (PRELIMINARY)

LOCATION	PILE TYPE	NOMINAL RESISTANCE (kips)		APPROXIMATE PILE CUT-OFF ELEV. (FT)	APPROXIMATE DESIGN TIP ELEV. (FT)	EMBEDDED PILE LENGTH (FT)
		COMPRESSION	TENSION			
ABUTMENT 1	CLASS 140 ALT. "X"	280	0	293.00±	TBD	TBD
BENT 2	6' DIA. CIDH	2200	0	296.00±	TBD	TBD
BENT 3	6' DIA. CIDH	2670	0	293.00±	TBD	TBD
BENT 4	6' DIA. CIDH	2770	0	296.00±	TBD	TBD
BENT 5	6' DIA. CIDH	2510	0	296.00±	TBD	TBD
ABUTMENT 6	CLASS 140 ALT. "X"	280	0	313.00±	TBD	TBD

NOTE: DESIGN TIP ELEVATIONS ARE TO BE DETERMINED BY CONTRACTOR

LEGEND:

- XXX.XX — INDICATES BOTTOM OF FOOTING ELEVATION
- INDICATES NEW PILE
- INDICATES NEW BATTER PILE
- INDICATES CIDH PILE
- INDICATES EXISTING STRUCTURE

NOTES:

1. EXISTING BRIDGE, SUBSTRUCTURE, AND UTILITY LOCATIONS ARE APPROXIMATE. CONTRACTOR SHALL FIELD VERIFY CONTROLLING DIMENSIONS PRIOR TO CONSTRUCTION.
2. EXISTING UNDERGROUND AND OVERHEAD UTILITIES TO BE DETERMINED AND RELOCATED AS NEEDED PRIOR CONSTRUCTION.
3. RIGHT OF WAY LIMITS ARE APPROXIMATE AND TO BE CONFIRMED BY THE CONTRACTOR.
4. REMOVE EXISTING SUBSTRUCTURE 2' MINIMUM BELOW FINISHED GRADE.
5. TEMPORARY SHORING
6. EXISTING SPREAD FOOTINGS

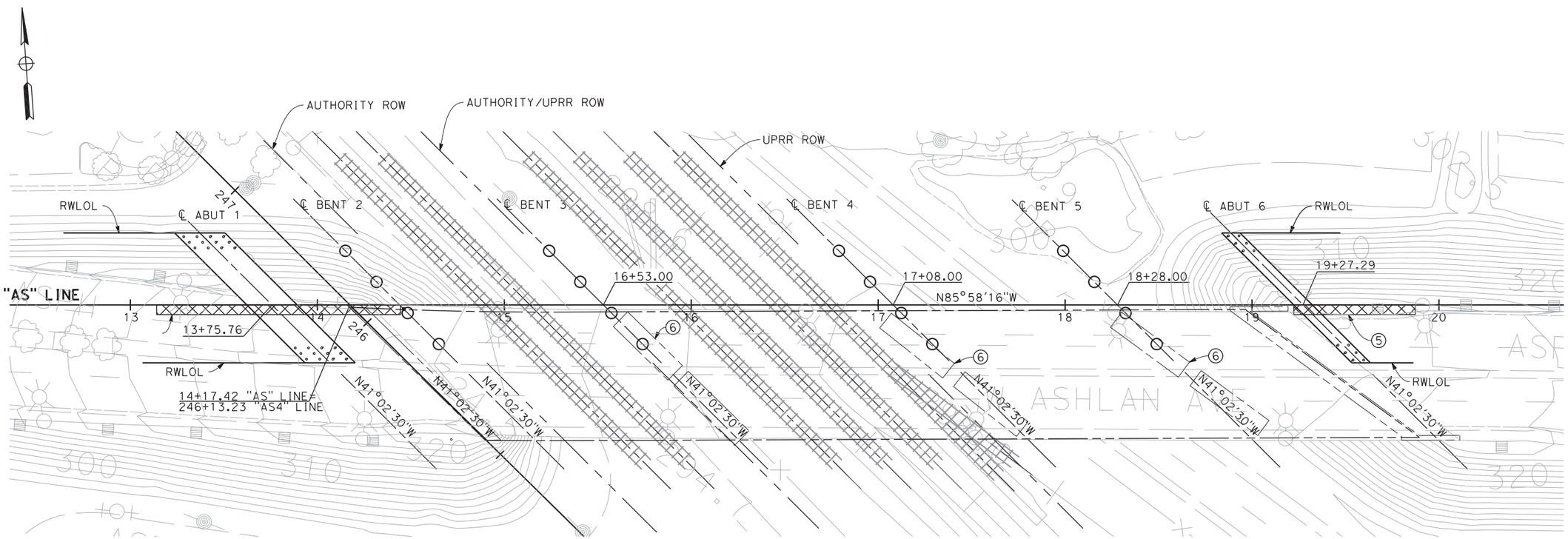

PLAN

SCALE: 1" = 30'

REV	DATE	BY	CHK	APP	DESCRIPTION

DESIGNED BY D. FREDERICKS
DRAWN BY P. WALKER
CHECKED BY H. STRANDGAARD
IN CHARGE F. NOBARI
DATE 2/17/12

PROPOSED PRELIMINARY DESIGN

NOT FOR CONSTRUCTION

AECOM Technical Services, Inc.
2020 L Street, Suite 300
Sacramento, CA 95811
CH2MHILL

CALIFORNIA HIGH-SPEED RAIL AUTHORITY

CALIFORNIA HIGH-SPEED TRAIN PROJECT
MERCED TO FRESNO
PACKAGE 1A
ROADWAY
ASHLAN AVE OVERHEAD
FOUNDATION PLAN

CONTRACT NO.
DRAWING NO. ST-I1010
SCALE AS NOTED
SHEET NO.

pwalker 2/15/2012 5:16:42 PM CAHSRP-R1.TBL CHSR_half_black.plt C:\Users\pwalker\Documents\NDMProj\356751 - California High Speed Rail - SR99 Improvements\X-1S-ST-K1003-R99.DGN

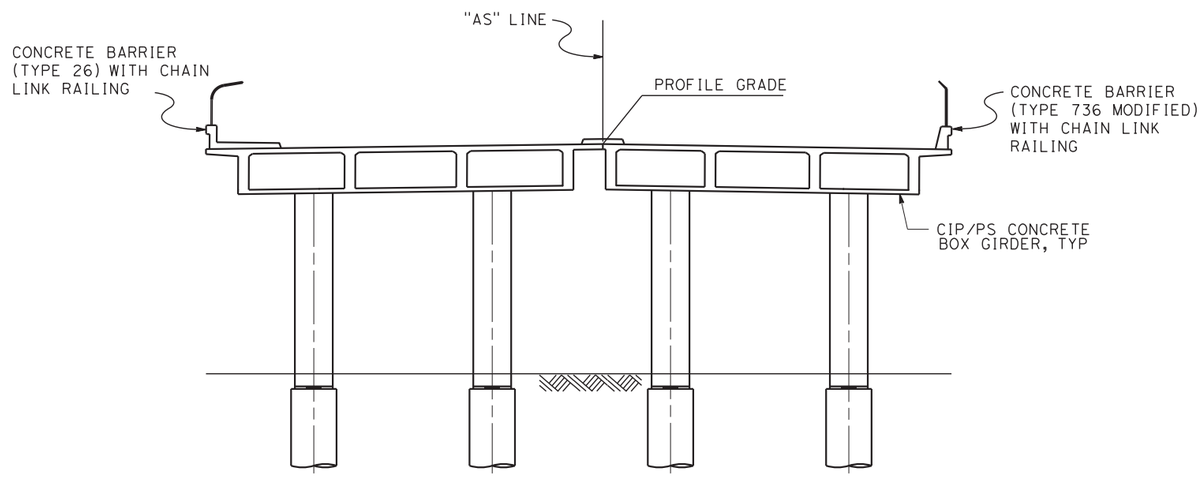

BENT ELEVATION
SCALE: 1"=10'

REV	DATE	BY	CHK	APP	DESCRIPTION

DESIGNED BY D. FREDERICKS
DRAWN BY M. MIYAMOTO
CHECKED BY H. STRANDGAARD
IN CHARGE F. NOBARI
DATE 2/17/12

PROPOSED PRELIMINARY DESIGN

NOT FOR CONSTRUCTION

AECOM Technical Services, Inc.
2020 L Street, Suite 300
Sacramento, CA 95811
CH2MHILL

CALIFORNIA HIGH-SPEED RAIL AUTHORITY

CALIFORNIA HIGH-SPEED TRAIN PROJECT
MERCED TO FRESNO
PACKAGE 1A
ROADWAY
ASHLAN AVE OVERHEAD
BENT ELEVATION

CONTRACT NO.
DRAWING NO. ST-I1011
SCALE AS SHOWN
SHEET NO.

pwalker 2/15/2012 3:45:14 PM CAHSRP-R1.TBL CHSR_half_black.plt C:\Users\pwalker\Documents\NDMProj\356751 - California High Speed Rail - SR99 Improvements\X-1S-ST-K1004-R99.DGN

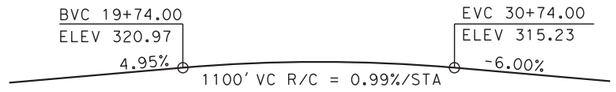

PROFILE GRADE
NO SCALE

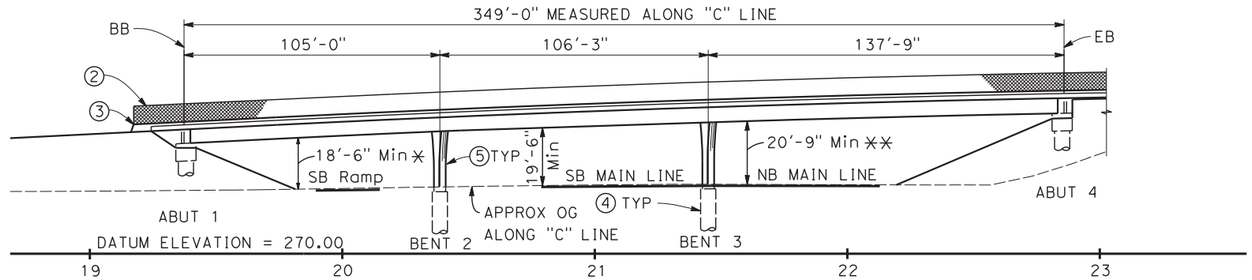

ELEVATION
SCALE: 1"=30'

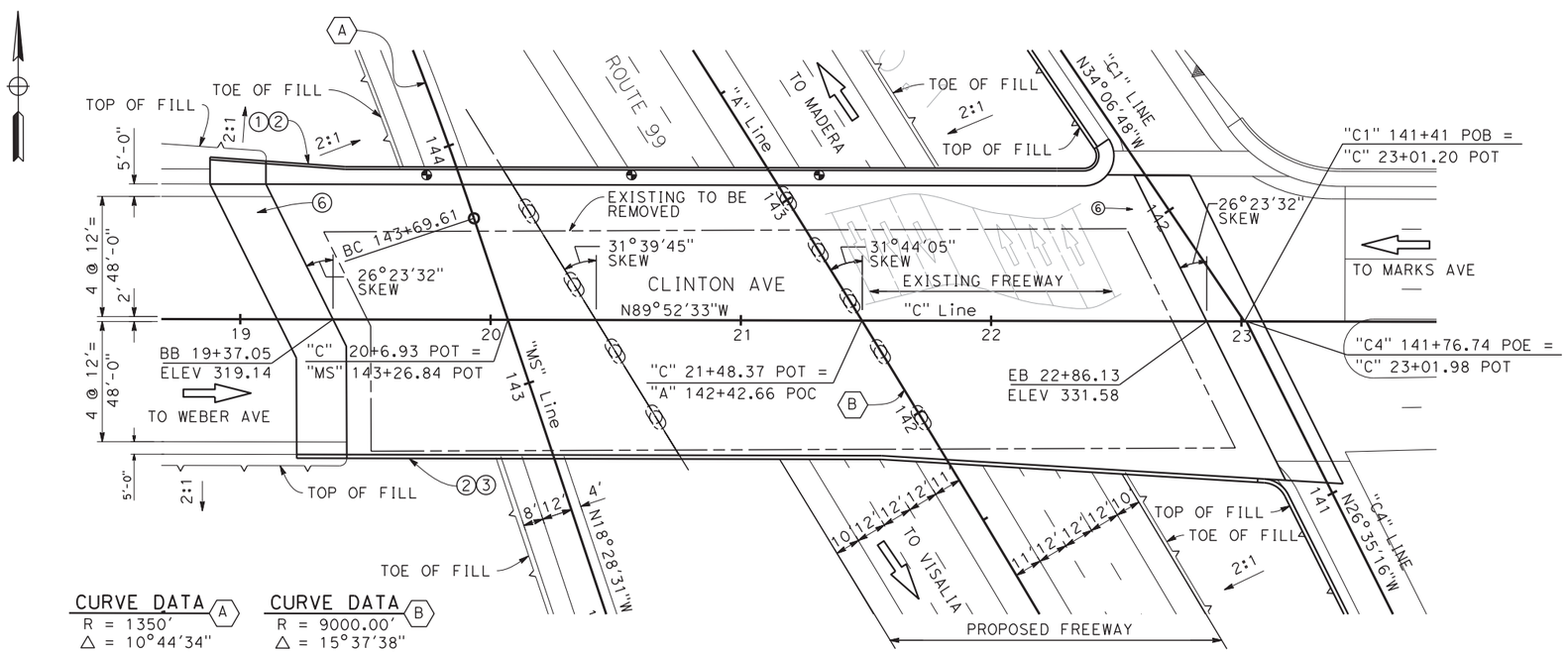

PLAN
SCALE: 1"=30'

NOTES:

1. CONCRETE BARRIER (TYPE 26 MODIFIED)
2. CHAIN LINK RAILING (TYPE 7 MODIFIED)
3. CONCRETE BARRIER (TYPE 736 MODIFIED)
4. 6'-0" DIA CIDH PILE
5. 4' X 6' OBLONG COLUMN
6. STRUCTURE APPROACH, TYPE N(30S)

✳ TEMPORARY FALSEWORK CLEARANCE = 16'-6"
FALSEWORK DEPTH = 2'-0"

✳✳ TEMPORARY FALSEWORK CLEARANCE = 17'-6"
FALSEWORK DEPTH = 3'-3"

LEGEND:

INDICATES DIRECTION OF TRAFFIC

INDICATES APPROXIMATE POINT OF MINIMUM VERTICAL CLEARANCE

REV	DATE	BY	CHK	APP	DESCRIPTION

DESIGNED BY D. FREDERICKS
DRAWN BY P. WALKER
CHECKED BY H. STRANDGAARD
IN CHARGE F. NOBARI
DATE 12/08/11

PROPOSED PRELIMINARY DESIGN

NOT FOR CONSTRUCTION

AECOM Technical Services, Inc.
2020 L Street, Suite 300
Sacramento, CA 95811
CH2MHILL

CALIFORNIA HIGH-SPEED RAIL AUTHORITY

CALIFORNIA HIGH-SPEED TRAIN PROJECT
MERCED TO FRESNO
PACKAGE 1A
ROADWAY
CLINTON AVE OVERCROSSING
GENERAL PLAN

CONTRACT NO.
DRAWING NO. ST-I1012
SCALE AS SHOWN
SHEET NO.

pwalker 12/2/2011 2:54:36 PM CAHSRP-R1.TBL CHSR_half_black.plt C:\Users\pwalker\Documents\NDMProj\356751 - California High Speed Rail - SR99 Improvements\X-1S-ST-K1008-R99.DGN

STAGING NOTES:

STAGE 1:

SHIFT CLINTON AVE EB & WB TRAFFIC TO SOUTHERLY PORTION OF CLINTON AVE OC.

REMOVE NORTH PORTION OF CLINTON AVE OC.

CONSTRUCT NORTH PORTION OF CLINTON AVE OC.

STAGE 2:

SHIFT CLINTON AVE EB & WB TRAFFIC TO NEWLY CONSTRUCTED CLINTON AVE OC.
REMOVE REMAINING PORTION OF CLINTON AVE OC.

CONSTRUCT SOUTH PORTION OF CLINTON AVE OC.

PLACE CLOSURE POUR.

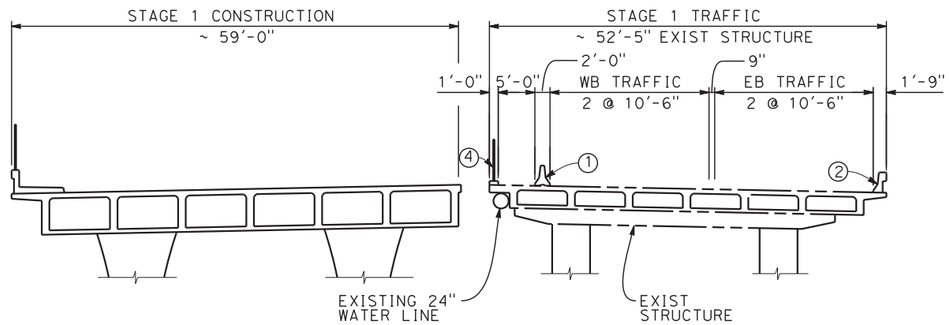

STAGE CONSTRUCTION
SCALE: 1"=10'

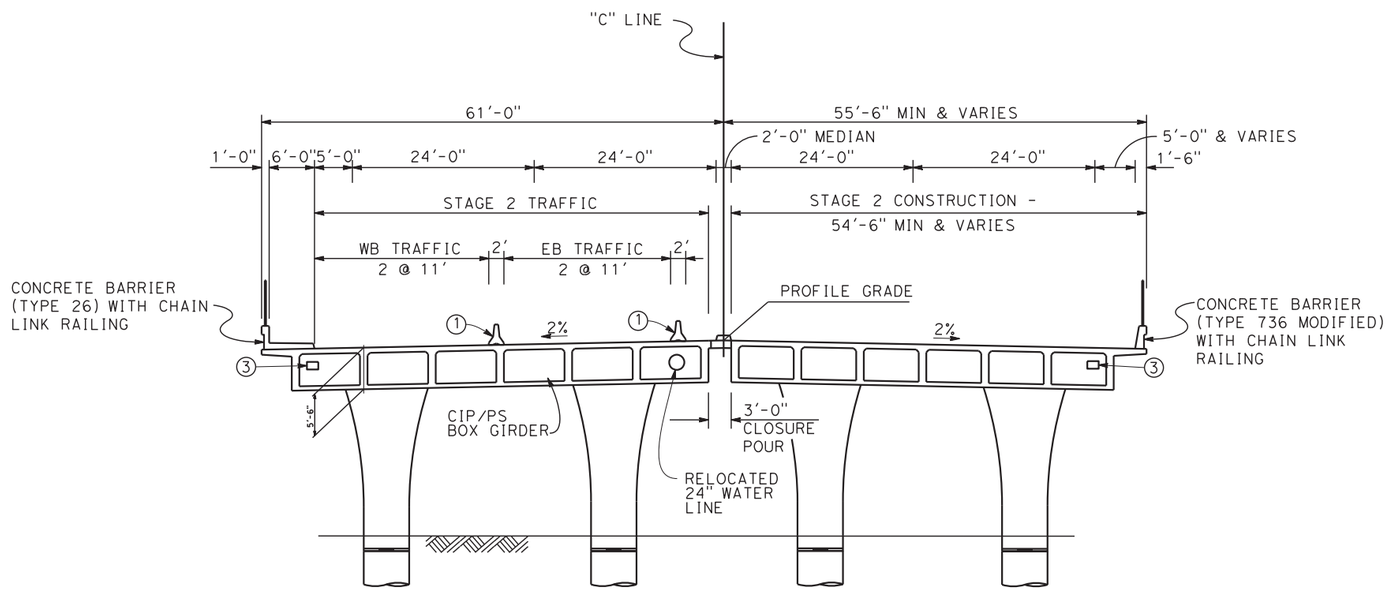

TYPICAL SECTION
SCALE: 1"=10'

1. TEMPORARY RAILING TYPE K
2. EXISTING BARRIER
3. FUTURE UTILITY OPENING
4. TEMPORARY CHAIN-LINK FENCE

REV	DATE	BY	CHK	APP	DESCRIPTION

DESIGNED BY D. FREDERICKS
DRAWN BY P. WALKER
CHECKED BY H. STRANDGAARD
IN CHARGE F. NOBARI
DATE 12/08/11

PROPOSED PRELIMINARY DESIGN

NOT FOR CONSTRUCTION

AECOM Technical Services, Inc.
2020 L Street, Suite 300
Sacramento, CA 95811
CH2MHILL

CALIFORNIA HIGH-SPEED RAIL AUTHORITY

CALIFORNIA HIGH-SPEED TRAIN PROJECT
MERCED TO FRESNO
PACKAGE 1A
ROADWAY
CLINTON AVE OVERCROSSING
TYPICAL SECTION

CONTRACT NO.
DRAWING NO. ST-I1013
SCALE AS SHOWN
SHEET NO.

pwalker 12/2/2011 2:28:57 PM CAHSRP-R1.TBL CHSR_half_black.plt C:\Users\pwalker\Documents\NDMProj\356751 - California High Speed Rail - SR99 Improvements\X-1S-ST-K1009-R99.DGN

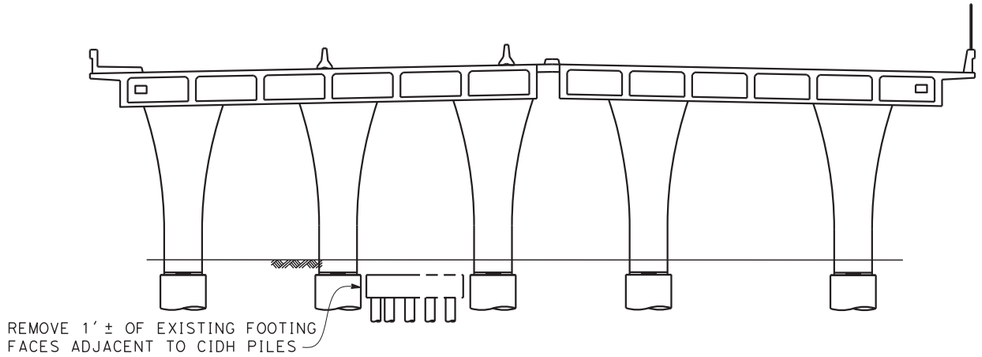

SECTION A-A
NO SCALE

LEGEND:

- XXX.XX — INDICATES BOTTOM OF FOOTING ELEVATION
- INDICATES CIDH PILE
- INDICATES EXISTING STRUCTURE
- INDICATES EXISTING PILE
- INDICATES EXISTING BATTER PILE

NOTES:

1. EXISTING BRIDGE, SUBSTRUCTURE, AND UTILITY LOCATIONS ARE APPROXIMATE. CONTRACTOR SHALL FIELD VERIFY CONTROLLING DIMENSIONS PRIOR TO CONSTRUCTION.
2. EXISTING UNDERGROUND AND OVERHEAD UTILITIES TO BE DETERMINED, AND RELOCATED AS NEEDED PRIOR TO CONSTRUCTION.
3. RIGHT OF WAY LIMITS ARE APPROXIMATE AND TO BE CONFIRMED BY THE CONTRACTOR.
4. REMOVE EXISTING SUBSTRUCTURE 2' MINIMUM BELOW FINISHED GRADE.
5. PARTIAL REMOVAL OF EXISTING BENT 3 FOOTING

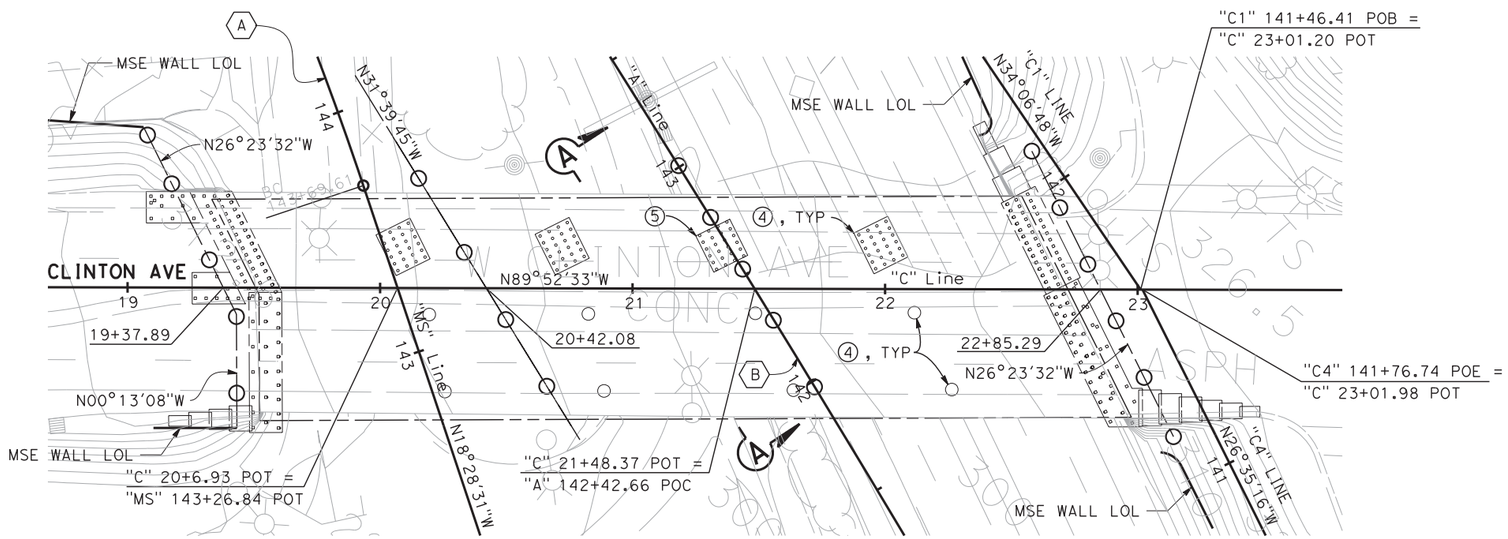

PLAN
SCALE: 1"=30'-0"

CURVE DATA (A)
R = 1350'
Δ = 10°44'34"
L = 253.12'
T = 126.93'

CURVE DATA (B)
R = 9000.00'
Δ = 15°37'38"
L = 2454.73'
T = 1235.03'

PILE DATA TABLE (PRELIMINARY)

LOCATION	PILE TYPE	NOMINAL RESISTANCE (kips)		APPROXIMATE PILE CUT-OFF ELEV. (FT)	APPROXIMATE DESIGN TIP ELEV. (FT)	EMBEDDED PILE LENGTH (FT)
		COMPRESSION	TENSION			
ABUTMENT 1	6' DIA. CIDH	2100	0	295.00±	TBD	TBD
BENT 2-3	6' DIA. CIDH	4150	0	295.00±	TBD	TBD
ABUTMENT 4	6' DIA. CIDH	2100	0	295.00±	TBD	TBD

NOTE: DESIGN TIP ELEVATIONS ARE TO BE DETERMINED BY CONTRACTOR

REV	DATE	BY	CHK	APP	DESCRIPTION

DESIGNED BY D. FREDERICKS
DRAWN BY P. WALKER
CHECKED BY H. STRANDGAARD
IN CHARGE F. NOBARI
DATE 12/08/11

PROPOSED PRELIMINARY DESIGN
NOT FOR CONSTRUCTION

AECOM Technical Services, Inc.
2020 L Street, Suite 300
Sacramento, CA 95811
CH2MHILL

CALIFORNIA HIGH-SPEED RAIL AUTHORITY

CALIFORNIA HIGH-SPEED TRAIN PROJECT
MERCED TO FRESNO
PACKAGE 1A
ROADWAY
CLINTON AVE OVERCROSSING
FOUNDATION PLAN

CONTRACT NO.
DRAWING NO. ST-I1014
SCALE AS SHOWN
SHEET NO.

pwalker 12/2/2011 2:32:33 PM CAHSRP-R1.TBL CHSR_half_black.plt C:\Users\pwalker\Documents\NDMProj\356751 - California High Speed Rail - SR99 Improvements\X-1S-ST-K1010-R99.DGN

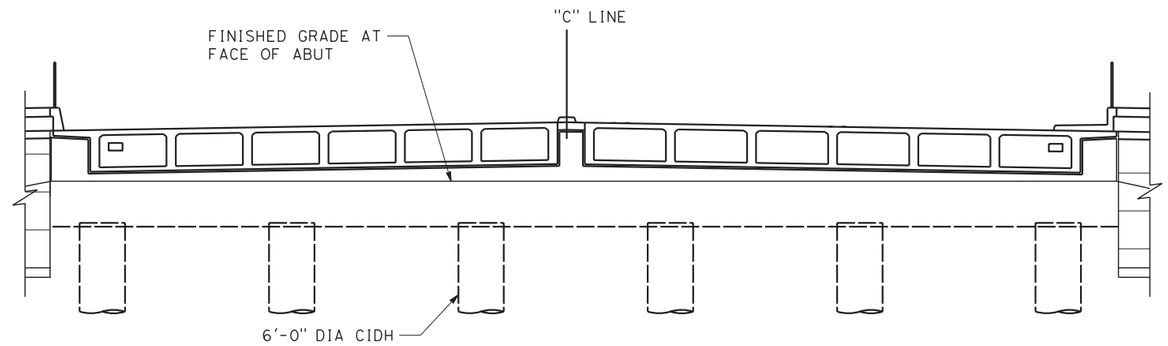

ABUTMENT ELEVATION
SCALE: 1" = 10'

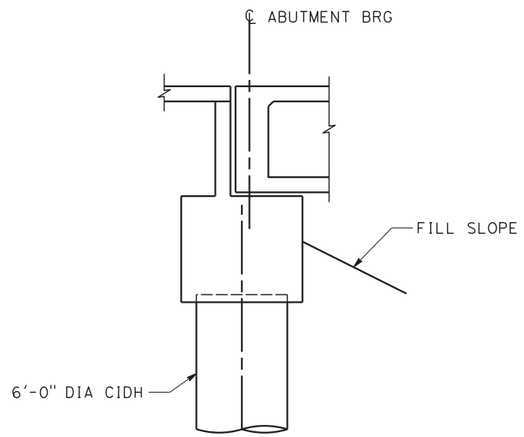

ABUTMENT SECTION
SCALE: 1" = 5'-0"

REV	DATE	BY	CHK	APP	DESCRIPTION

DESIGNED BY D. FREDERICKS
DRAWN BY P. WALKER
CHECKED BY H. STRANDGAARD
IN CHARGE F. NOBARI
DATE 12/08/11

PROPOSED PRELIMINARY DESIGN

NOT FOR CONSTRUCTION

AECOM Technical Services, Inc.
2020 L Street, Suite 300
Sacramento, CA 95811
CH2MHILL

CALIFORNIA HIGH-SPEED RAIL AUTHORITY

CALIFORNIA HIGH-SPEED TRAIN PROJECT
MERCED TO FRESNO
PACKAGE 1A
ROADWAY
CLINTON AVE OVERCROSSING
CONSTRUCTION DETAIL NO. 1

CONTRACT NO.
DRAWING NO. ST-I1015
SCALE AS SHOWN
SHEET NO.

pwalker 12/2/2011 2:55:47 PM CAHSRP-R1.TBL CHSR_half_black.plt C:\Users\pwalker\Documents\NDMProj\356751 - California High Speed Rail - SR99 Improvements\X-1S-ST-K1011-R99.DGN

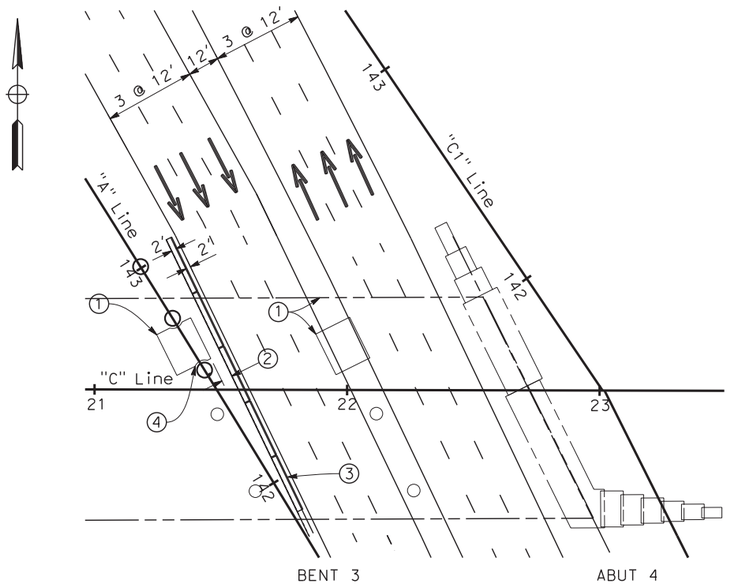

STAGE 1 PLAN AT BENT 3

SCALE: 1"=30'

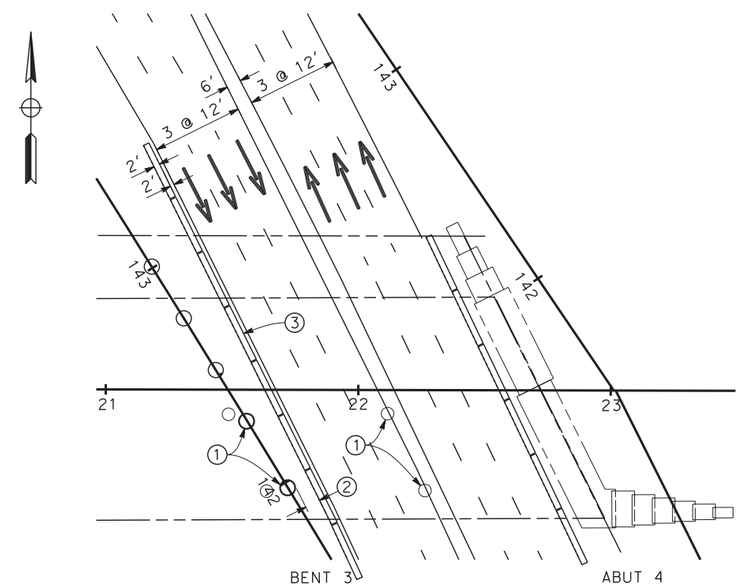

STAGE 2 PLAN AT BENT 3

SCALE: 1"=30'

NOTES:

1. REMOVE SUPERSTRUCTURE, AND SUBSTRUCTURE TO 2' BELOW FG, DURING NIGHT CLOSURES
2. 6'-6" MINIMUM TO K-RAIL
3. TEMPORARY RAILING TYPE K
4. REMOVE PORTION OF EXISTING FOOTING

REV	DATE	BY	CHK	APP	DESCRIPTION

DESIGNED BY D. FREDERICKS
DRAWN BY P. WALKER
CHECKED BY H. STRANDGAARD
IN CHARGE F. NOBARI
DATE 12/08/11

PROPOSED PRELIMINARY DESIGN

NOT FOR CONSTRUCTION

AECOM Technical Services, Inc.
2020 L Street, Suite 300
Sacramento, CA 95811
CH2MHILL

CALIFORNIA HIGH-SPEED RAIL AUTHORITY

CALIFORNIA HIGH-SPEED TRAIN PROJECT
MERCED TO FRESNO
PACKAGE 1A
ROADWAY
CLINTON AVE OVERCROSSING
CONSTRUCTION DETAIL NO. 2

CONTRACT NO.
DRAWING NO. ST-I1016
SCALE AS SHOWN
SHEET NO.

pwalker 12/2/2011 2:56:58 PM CAHSRP-R1.TBL CHSR_half_black.plt C:\Users\pwalker\Documents\NDMProj\356751 - California High Speed Rail - SR99 Improvements\X-1S-ST-K1012-R99.DGN

PROFILE GRADE

NO SCALE

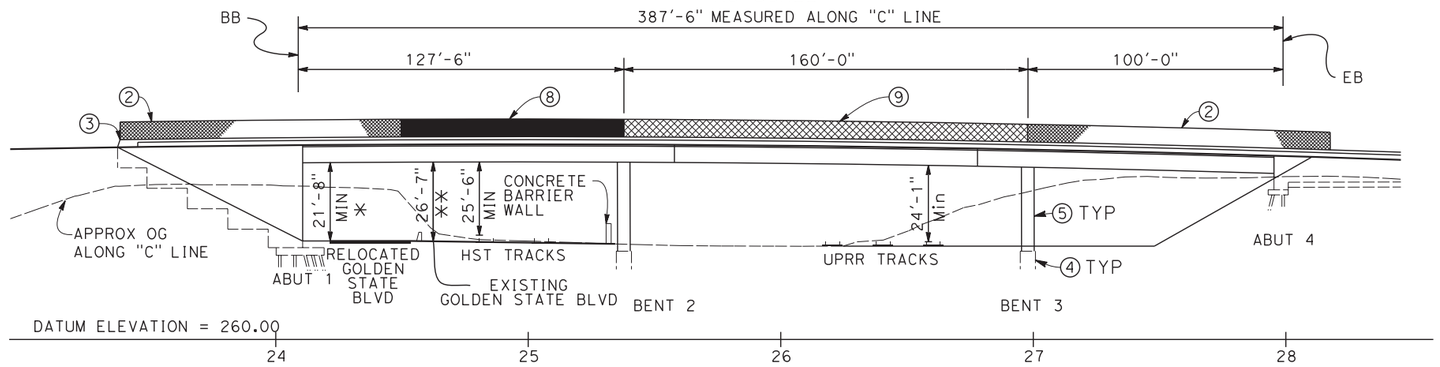

ELEVATION

SCALE: 1"=30'-0"

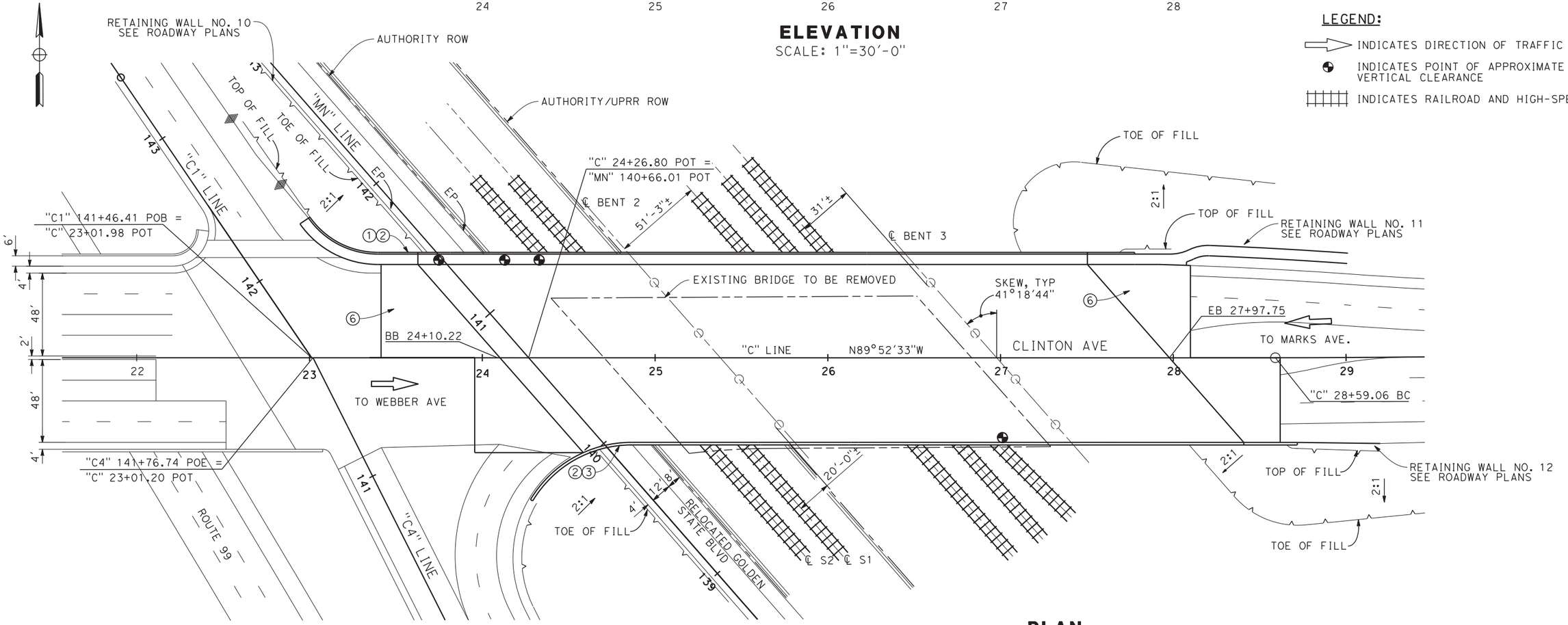

PLAN

SCALE: 1"=30'-0"

NOTES:

1. CONCRETE BARRIER (TYPE 26 MODIFIED)
2. CHAIN LINK RAILING (TYPE 7 MODIFIED)
3. CONCRETE BARRIER (TYPE 736 MODIFIED)
4. 6'-0" DIA CIDH PILE
5. 5'-6" DIA COLUMN
6. STRUCTURE APPROACH, TYPE N(30S)
7. EXISTING UPRR ROW TO BE CONFIRMED ON SITE
8. AR FENCE WITH SOLID PLATE
9. AR FENCE

* TEMPORARY FALSEWORK CLEARANCE = 19'-9"
FALSEWORK DEPTH = 1'-10"

** TEMPORARY FALSEWORK CLEARANCE = 24'-8"
FALSEWORK DEPTH = 1'-10"

LEGEND:

INDICATES DIRECTION OF TRAFFIC

INDICATES POINT OF APPROXIMATE MINIMUM VERTICAL CLEARANCE

INDICATES RAILROAD AND HIGH-SPEED TRAIN TRACK

REV	DATE	BY	CHK	APP	DESCRIPTION

DESIGNED BY D. FREDERICKS
DRAWN BY P. WALKER
CHECKED BY H. STRANDGAARD
IN CHARGE F. NOBARI
DATE 2/17/12

PROPOSED PRELIMINARY DESIGN

NOT FOR CONSTRUCTION

AECOM Technical Services, Inc.
2020 L Street, Suite 300
Sacramento, CA 95811

CH2MHILL

CALIFORNIA HIGH-SPEED RAIL AUTHORITY

CALIFORNIA HIGH-SPEED TRAIN PROJECT
MERCED TO FRESNO
PACKAGE 1A
ROADWAY
FRESNO YARD OVERHEAD (CLINTON/UPRR)
GENERAL PLAN

CONTRACT NO.
DRAWING NO. ST-I1017
SCALE AS SHOWN
SHEET NO.

pwalker 2/15/2012 4:57:27 PM CAHSRP-R1.TBL CHSR_half_black.plt C:\Users\pwalker\Documents\NDMProj\356751 - California High Speed Rail - SR99 Improvements\X-1S-ST-K1013-R99.DGN

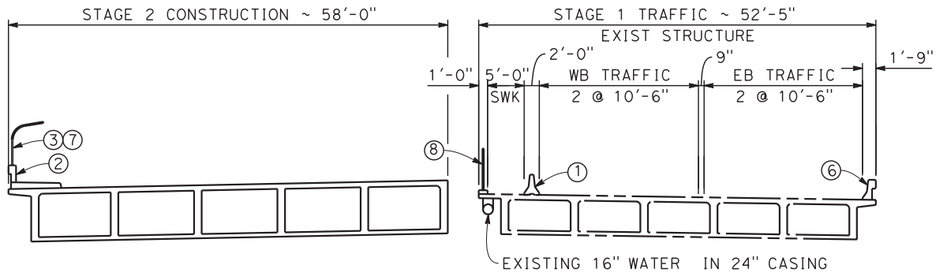

STAGE 1
SCALE: 1"=10'-0"

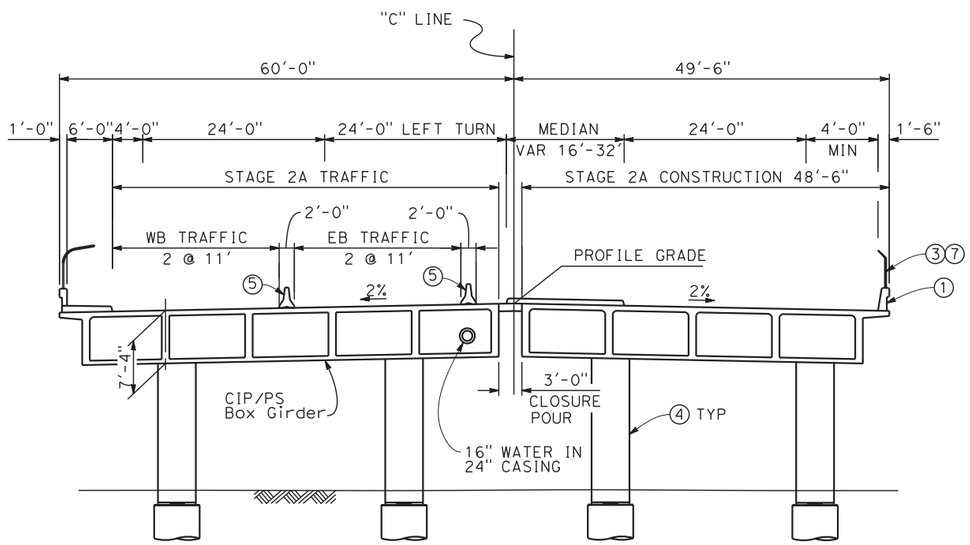

STAGE 2
SCALE: 1"=10'-0"

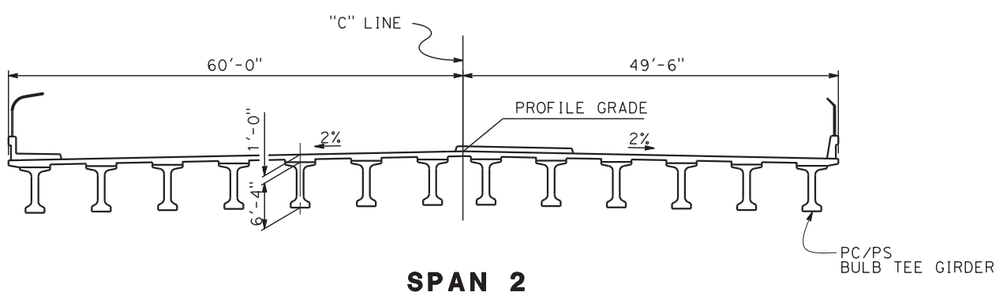

SPAN 2
SCALE: 1"=10'-0"

NOTES:

1. CONCRETE BARRIER (TYPE 26 MODIFIED)
2. CONCRETE BARRIER (TYPE 736 MODIFIED)
3. CHAIN LINK RAILING (TYPE 7 MODIFIED)
4. 5'-6" DIA COLUMN
5. TEMPORARY RAILING TYPE K
6. EXISTING BARRIER
7. AR FENCE
8. TEMPORARY CHAIN-LINK FENCE

STAGING NOTES:

STAGE 1:

SHIFT CLINTON AVE EB & WB TRAFFIC TO SOUTHERLY PORTION OF FRESNO YARD OH.

REMOVE NORTH PORTION OF FRESNO YARD OH.

CONSTRUCT NORTH PORTION OF FRESNO YARD OH.

STAGE 2:

SHIFT CLINTON AVE EB & WB TRAFFIC TO NEWLY CONSTRUCTED FRESNO YARD OH.

REMOVE REMAINING PORTION OF FRESNO YARD OH.

CONSTRUCT SOUTH PORTION OF FRESNO YARD OH.

CLOSURE POUR.

REV	DATE	BY	CHK	APP	DESCRIPTION

DESIGNED BY D. FREDERICKS
DRAWN BY P. WALKER
CHECKED BY H. STRANDGAARD
IN CHARGE F. NOBARI
DATE 12/08/11

PROPOSED PRELIMINARY DESIGN

NOT FOR CONSTRUCTION

AECOM Technical Services, Inc.
2020 L Street, Suite 300
Sacramento, CA 95811
CH2MHILL

CALIFORNIA HIGH-SPEED RAIL AUTHORITY

CALIFORNIA HIGH-SPEED TRAIN PROJECT
MERCED TO FRESNO
PACKAGE 1A
ROADWAY
FRESNO YARD OVERHEAD (CLINTON/UPRR)
TYPICAL SECTION

CONTRACT NO.
DRAWING NO. ST-I1018
SCALE AS SHOWN
SHEET NO.

pwalker 12/2/2011 2:58:42 PM CAHSRP-R1.TBL CHSR_half_black.plt C:\Users\pwalker\Documents\NDMProj\356751 - California High Speed Rail - SR99 Improvements\X-1S-ST-K1014-R99.DGN

PILE DATA TABLE (PRELIMINARY)

LOCATION	PILE TYPE	NOMINAL RESISTANCE (kips)		APPROXIMATE PILE CUT-OFF ELEV. (FT)	APPROXIMATE DESIGN TIP ELEV. (FT)	EMBEDDED PILE LENGTH (FT)
		COMPRESSION	TENSION			
ABUTMENT 1	CLASS 140 ALT. "X"	280	0	294.00±	TBD	TBD
BENT 2	6' DIA. CIDH	6270	0	294.00±	TBD	TBD
BENT 3	6' DIA. CIDH	5440	0	294.00±	TBD	TBD
ABUTMENT 4	CLASS 140 ALT. "X"	280	0	317.00±	TBD	TBD

NOTE: DESIGN TIP ELEVATIONS ARE TO BE DETERMINED BY CONTRACTOR

LEGEND:

- XXX.XX — INDICATES BOTTOM OF FOOTING ELEVATION
- INDICATES NEW PILE
- INDICATES NEW BATTER PILE
- INDICATES CIDH PILE
- INDICATES EXISTING STRUCTURE

NOTES:

1. EXISTING BRIDGE SUBSTRUCTURE AND UTILITY LOCATIONS ARE APPROXIMATE. CONTRACTOR SHALL FIELD VERIFY CONTROLLING DIMENSIONS PRIOR TO CONSTRUCTION.
2. EXISTING UNDERGROUND AND OVERHEAD UTILITIES TO BE DETERMINED AND RELOCATED AS NEEDED PRIOR CONSTRUCTION.
3. RIGHT OF WAY LIMITS ARE APPROXIMATE AND TO BE CONFIRMED BY THE CONTRACTOR.
4. REMOVE EXISTING SUBSTRUCTURE 2' MINIMUM BELOW FINISHED GRADE.
5. TEMPORARY SHORING

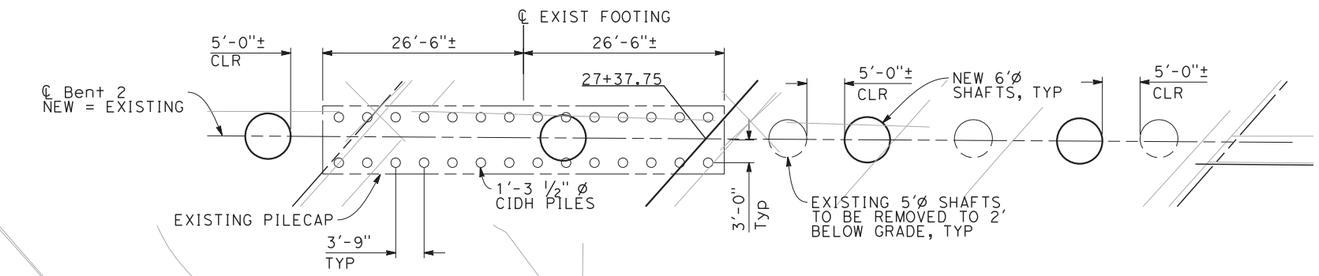

EXISTING FOUNDATION INFORMATION SHOWN IS APPROXIMATE.

EXISTING PILES ARE 1'-3 ½" CIDH PILES, 21' IN LENGTH, WITH LOWER 12' UNREINFORCED. IN ADVANCE OF CONSTRUCTION, THE CONTRACTOR SHALL SUBMIT FOR APPROVAL, PROPOSED METHODS TO REMOVE CONFLICTING PORTIONS OF THE EXISTING FOUNDATION WITH THE PROPOSED NEW FOUNDATION.

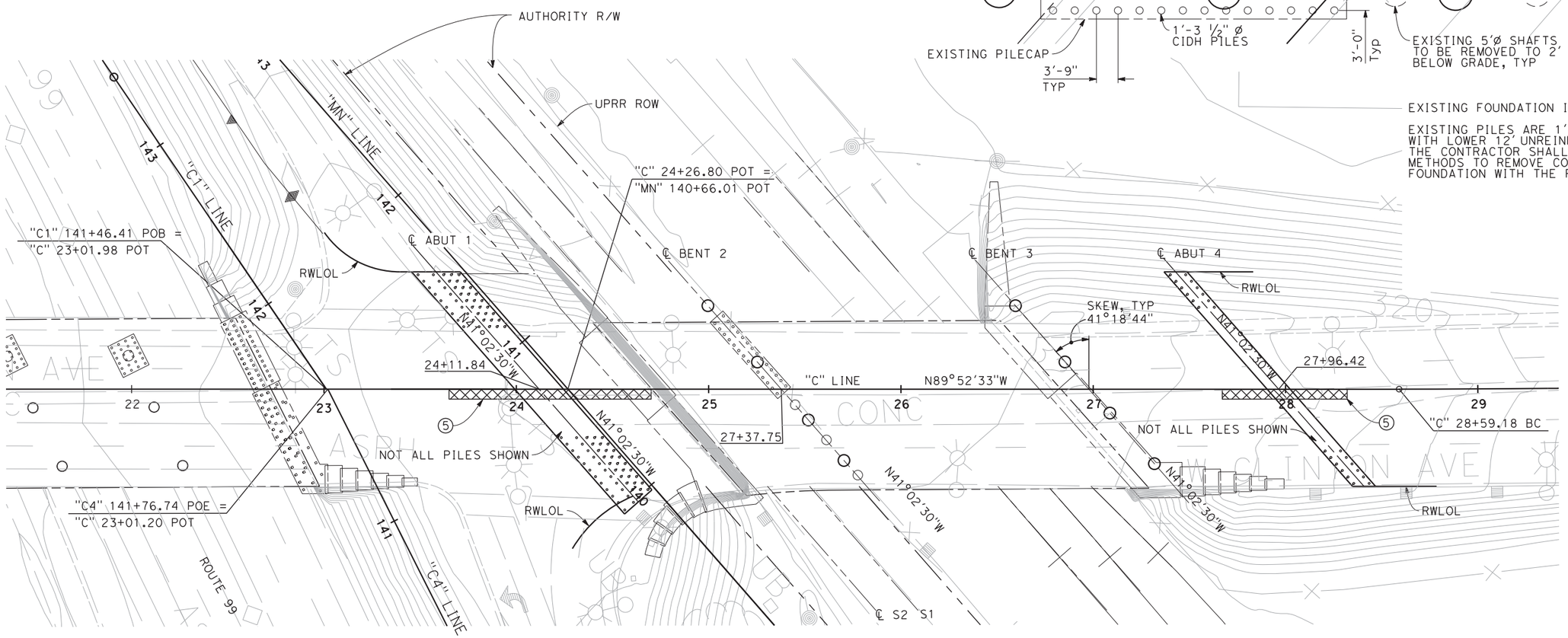

PLAN
SCALE: 1"=30'-0"

REV	DATE	BY	CHK	APP	DESCRIPTION

DESIGNED BY D. FREDERICKS
DRAWN BY P. WALKER
CHECKED BY H. STRANDGAARD
IN CHARGE F. NOBARI
DATE 12/08/11

PROPOSED PRELIMINARY DESIGN

NOT FOR CONSTRUCTION

AECOM Technical Services, Inc.
2020 L Street, Suite 300
Sacramento, CA 95811
CH2MHILL

CALIFORNIA HIGH-SPEED RAIL AUTHORITY

CALIFORNIA HIGH-SPEED TRAIN PROJECT
MERCED TO FRESNO
PACKAGE 1A
ROADWAY
FRESNO YARD OVERHEAD (CLINTON/UPRR)
FOUNDATION PLAN

CONTRACT NO.
DRAWING NO. ST-I1019
SCALE AS SHOWN
SHEET NO.

pwalker 12/2/2011 2:42:19 PM CAHSRP-R1.TBL CHSR_half_black.plt C:\Users\pwalker\Documents\NDMProj\356751 - California High Speed Rail - SR99 Improvements\X-1S-ST-K1015-R99.DGN

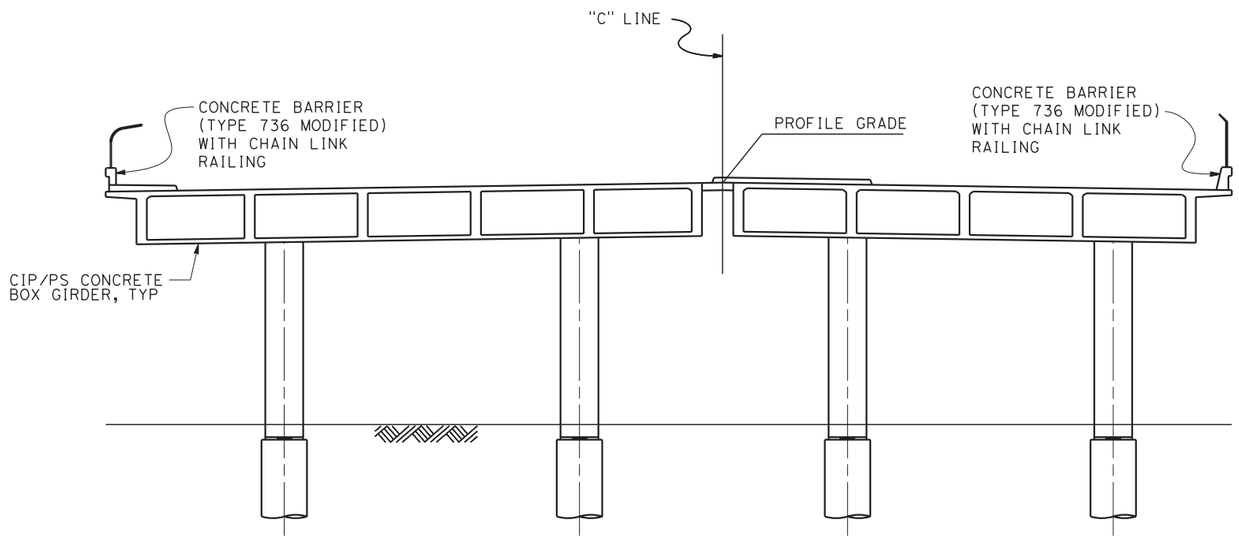

BENT ELEVATION
SCALE: 1"=10'-0"

REV	DATE	BY	CHK	APP	DESCRIPTION

DESIGNED BY D. FREDERICKS
DRAWN BY M. MIYAMOTO
CHECKED BY H. STRANDGAARD
IN CHARGE F. NOBARI
DATE 12/08/11

PROPOSED PRELIMINARY DESIGN

NOT FOR CONSTRUCTION

AECOM Technical Services, Inc.
2020 L Street, Suite 300
Sacramento, CA 95811
CH2MHILL

CALIFORNIA HIGH-SPEED RAIL AUTHORITY

CALIFORNIA HIGH-SPEED TRAIN PROJECT
MERCED TO FRESNO
PACKAGE 1A
ROADWAY
FRESNO YARD OVERHEAD (CLINTON/UPRR)
BENT ELEVATION

CONTRACT NO.
DRAWING NO. ST-11020
SCALE AS SHOWN
SHEET NO.

pwalker 12/2/2011 2:43:54 PM CAHSRP-R1.TBL CHSR_half_black.plt C:\Users\pwalker\Documents\NDMProj\356751 - California High Speed Rail - SR99 Improvements\X-1S-ST-K1016-R99.DGN

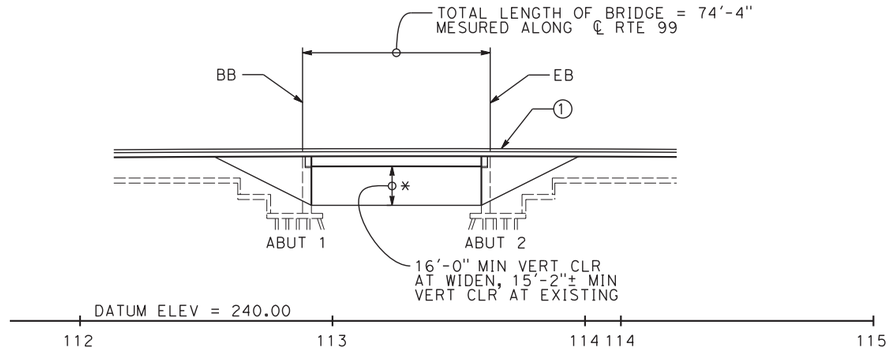

MIRRORED ELEVATION

SCALE: 1"=30'

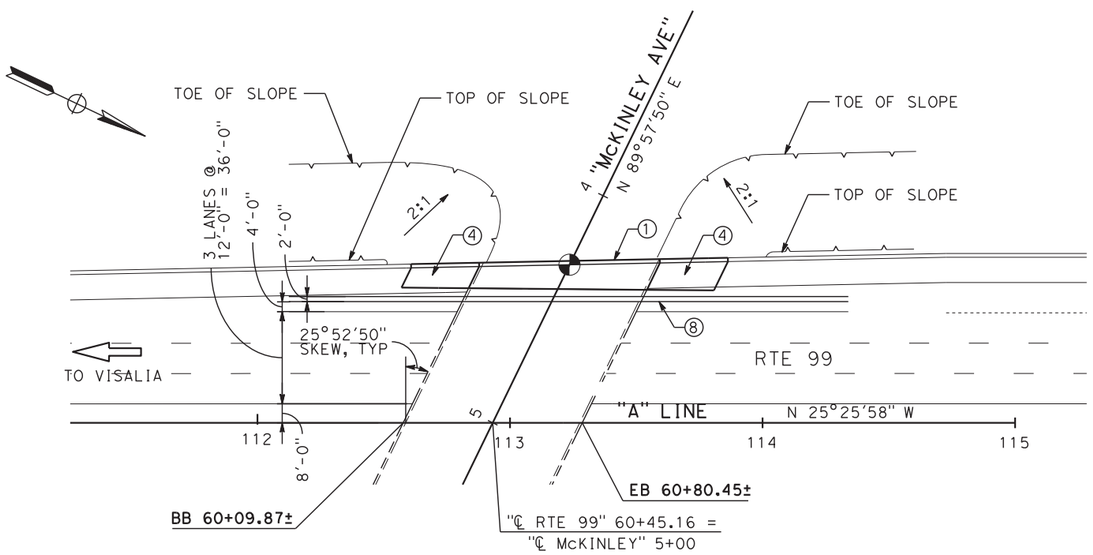

PLAN

SCALE: 1"=30'

NOTES:

1. CONCRETE BARRIER (TYPE 736 MODIFIED)
2. FOR UTILITY INFORMATION, SEE UTILITY BASE MAP PLANS
3. PAINT "McKINLEY AVE UC" AMD "BR NO 43-181 R/L"
4. STRUCTURE APPROACH, TYPE N (305)
5. MATCH EXISTING GRADE AND X-SLOPE
6. REMOVE EXISTING RAILING
7. 2'-0" CLOSURE POUR
8. TEMPORARY RALING (TYPE K)

* STRUCTURE TO BE CAST ON FALSEWORK AND LOWERED INTO PLACE

LEGEND:

- INDICATES DIRECTION OF TRAFFIC
- INDICATES APPROXIMATE POINT OF MIN VERTICAL CLEARANCE
- INDICATES CLEARANCE LINE
- INDICATES EXISTING STRUCTURE
- INDICATES CONCRETE REMOVAL

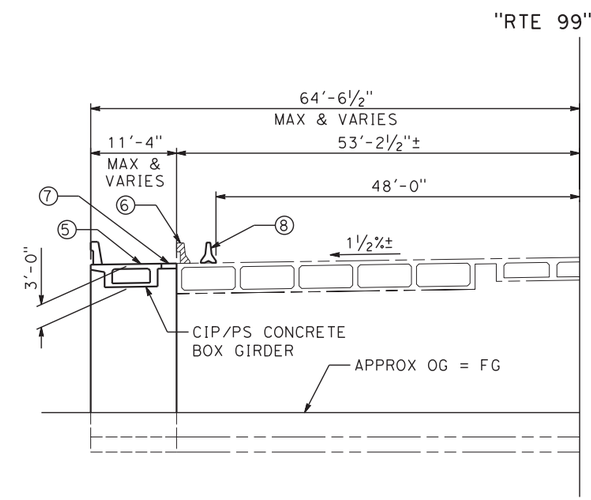

TYPICAL SECTION

SCALE: 1"=10'

REV	DATE	BY	CHK	APP	DESCRIPTION

DESIGNED BY D. FREDERICKS
DRAWN BY M. MIYAMOTO
CHECKED BY H. STRANDGAARD
IN CHARGE F. NOBARI
DATE 12/08/11

PROPOSED PRELIMINARY DESIGN

NOT FOR CONSTRUCTION

AECOM Technical Services, Inc.
2020 L Street, Suite 300
Sacramento, CA 95811
CH2MHILL

CALIFORNIA HIGH-SPEED RAIL AUTHORITY

CALIFORNIA HIGH-SPEED TRAIN PROJECT
MERCED TO FRESNO
PACKAGE 1A
ROADWAY
MCKINLEY BLVD UNDERCROSSING (WIDEN)
GENERAL PLAN

CONTRACT NO.
DRAWING NO. ST-I1021
SCALE AS SHOWN
SHEET NO.

pwalker 12/2/2011 2:47:09 PM CAHSRP-R1.TBL CHSR_half_black.plt C:\Users\pwalker\Documents\NDMProj\356751 - California High Speed Rail - SR99 Improvements\X-1S-ST-K1017-R99.DGN

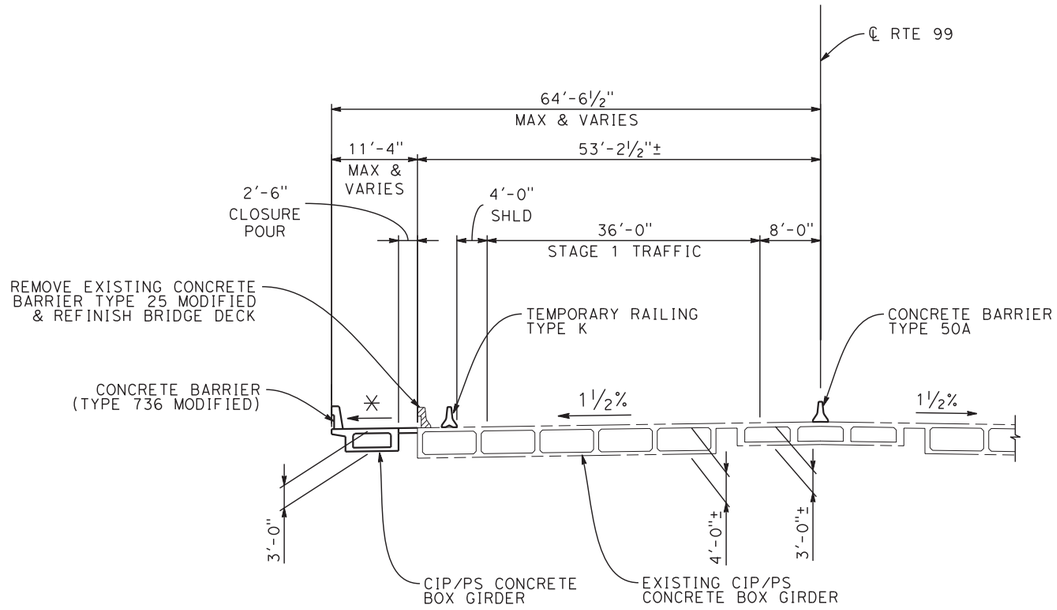

NOTES:

* MATCH EXISTING GRADE AND X-SLOPE

TYPICAL SECTION
SCALE: 1" = 10'-0"

REV	DATE	BY	CHK	APP	DESCRIPTION

DESIGNED BY D. FREDERICKS
DRAWN BY M. MIYAMOTO
CHECKED BY H. STRANDGAARD
IN CHARGE F. NOBARI
DATE 12/08/11

PROPOSED PRELIMINARY DESIGN

NOT FOR CONSTRUCTION

AECOM Technical Services, Inc.
2020 L Street, Suite 300
Sacramento, CA 95811
CH2MHILL

CALIFORNIA HIGH-SPEED RAIL AUTHORITY

CALIFORNIA HIGH-SPEED TRAIN PROJECT
MERCED TO FRESNO
PACKAGE 1A
ROADWAY
MCKINLEY BLVD UNDERCROSSING (WIDEN)
TYPICAL SECTION

CONTRACT NO.
DRAWING NO. ST-I1022
SCALE AS SHOWN
SHEET NO.

pwalker 12/2/2011 2:48:38 PM CAHSRP-R1.TBL CHSR_half_black.plt C:\Users\pwalker\Documents\NDMProj\356751 - California High Speed Rail - SR99 Improvements\X-1S-ST-K1018-R99.DGN

PILE DATA TABLE (PRELIMINARY)

LOCATION	PILE TYPE	NOMINAL RESISTANCE (kips)		APPROXIMATE PILE CUT-OFF ELEV. (FT)	APPROXIMATE DESIGN TIP ELEV. (FT)	EMBEDDED PILE LENGTH (FT)
		COMPRESSION	TENSION			
ABUTMENT 1	CLASS 140 ALT. "X"	280	0	N/A	TBD	TBD
ABUTMENT 2	CLASS 140 ALT. "X"	280	0	N/A	TBD	TBD

NOTE: DESIGN TIP ELEVATIONS ARE TO BE DETERMINED BY CONTRACTOR

LEGEND:

- INDICATES BOTTOM OF FOOTING ELEVATION
- INDICATES PC/PS PILE
- INDICATES EXISTING STRUCTURE

NOTES:

1. EXISTING BRIDGE, SUBSTRUCTURE, AND UTILITY LOCATIONS ARE APPROXIMATE. CONTRACTOR SHALL FIELD VERIFY CONTROLLING DIMENSIONS PRIOR TO CONSTRUCTION.
2. EXISTING UNDERGROUND AND OVERHEAD UTILITIES TO BE DETERMINED AND RELOCATED AS NEEDED PRIOR TO CONSTRUCTION.
3. RIGHT OF WAY LIMITS ARE APPROXIMATE AND TO BE CONFIRMED BY THE CONTRACTOR
4. MATCH EXISTING FOOTING ELEVATION

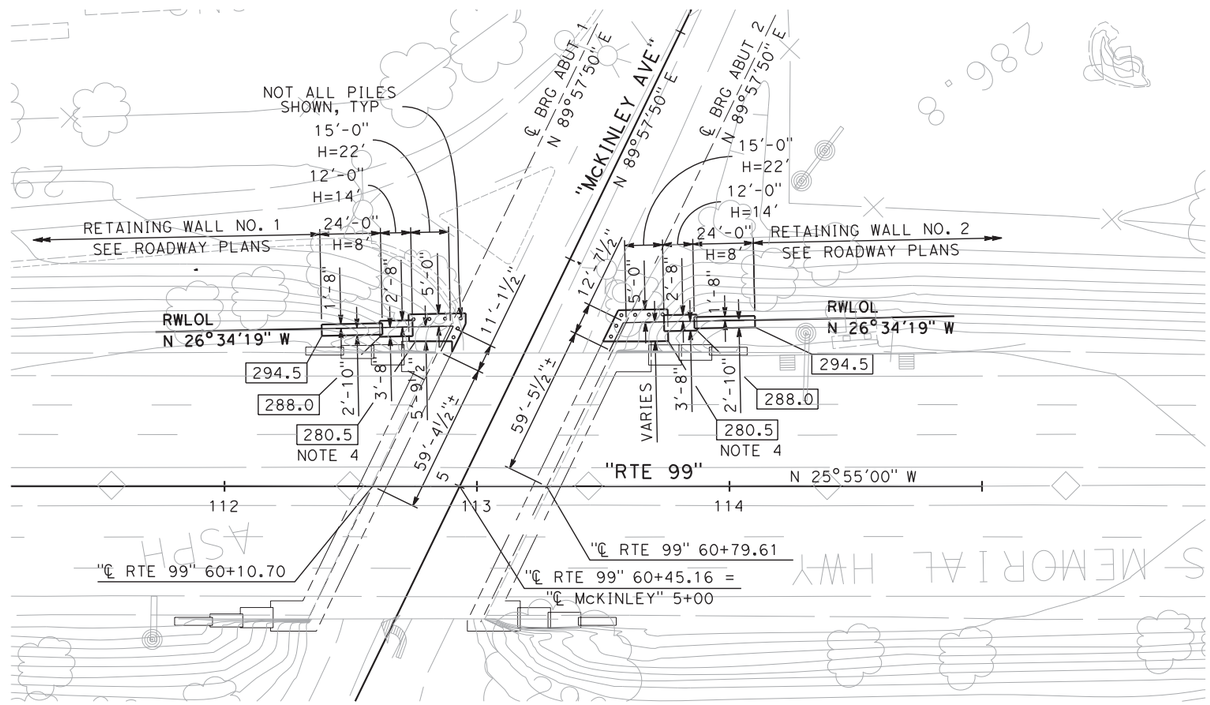

PLAN
SCALE: 1"=30'

REV	DATE	BY	CHK	APP	DESCRIPTION

DESIGNED BY D. FREDERICKS
DRAWN BY M. MIYAMOTO
CHECKED BY H. STRANDGAARD
IN CHARGE F. NOBARI
DATE 12/08/11

PROPOSED PRELIMINARY DESIGN

NOT FOR CONSTRUCTION

AECOM Technical Services, Inc.
2020 L Street, Suite 300
Sacramento, CA 95811
CH2MHILL

CALIFORNIA HIGH-SPEED RAIL AUTHORITY

CALIFORNIA HIGH-SPEED TRAIN PROJECT
MERCED TO FRESNO
PACKAGE 1A
ROADWAY
MCKINLEY BLVD UNDERCROSSING (WIDEN)
FOUNDATION PLAN

CONTRACT NO.
DRAWING NO. ST-I1023
SCALE AS SHOWN
SHEET NO.

pwalker 12/2/2011 3:06:24 PM CAHSRP-R1.TBL CHSR_half_black.plt C:\Users\pwalker\Documents\NDMProj\356751 - California High Speed Rail - SR99 Improvements\X-1S-ST-K1019-R99.DGN

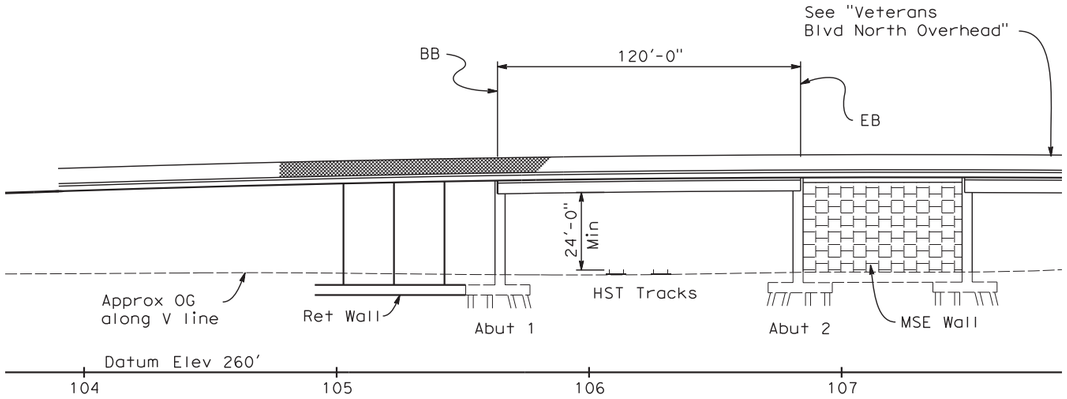

ELEVATION
1"=30'

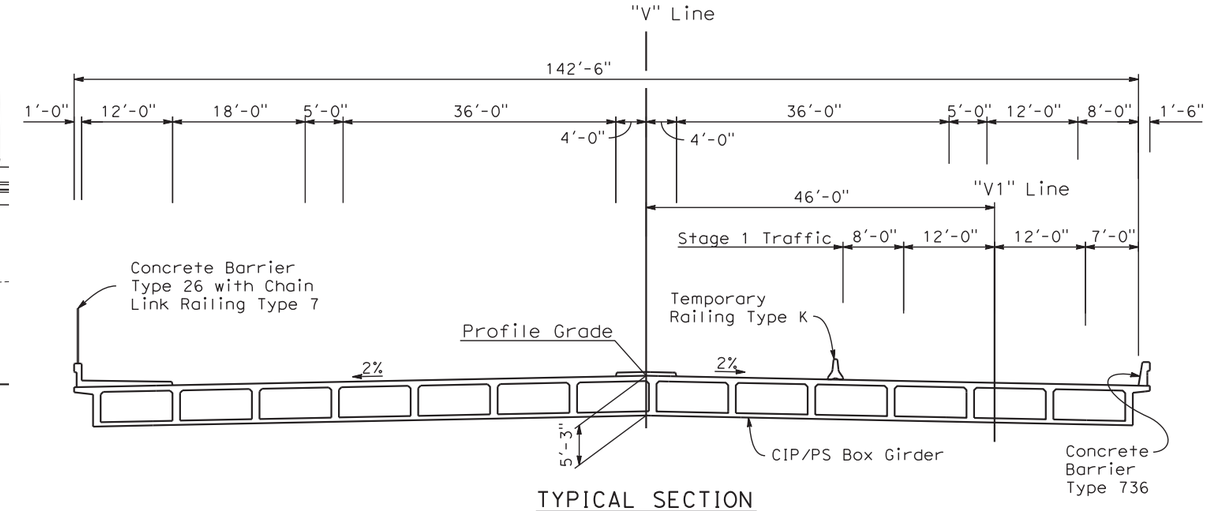

TYPICAL SECTION
1"=10'

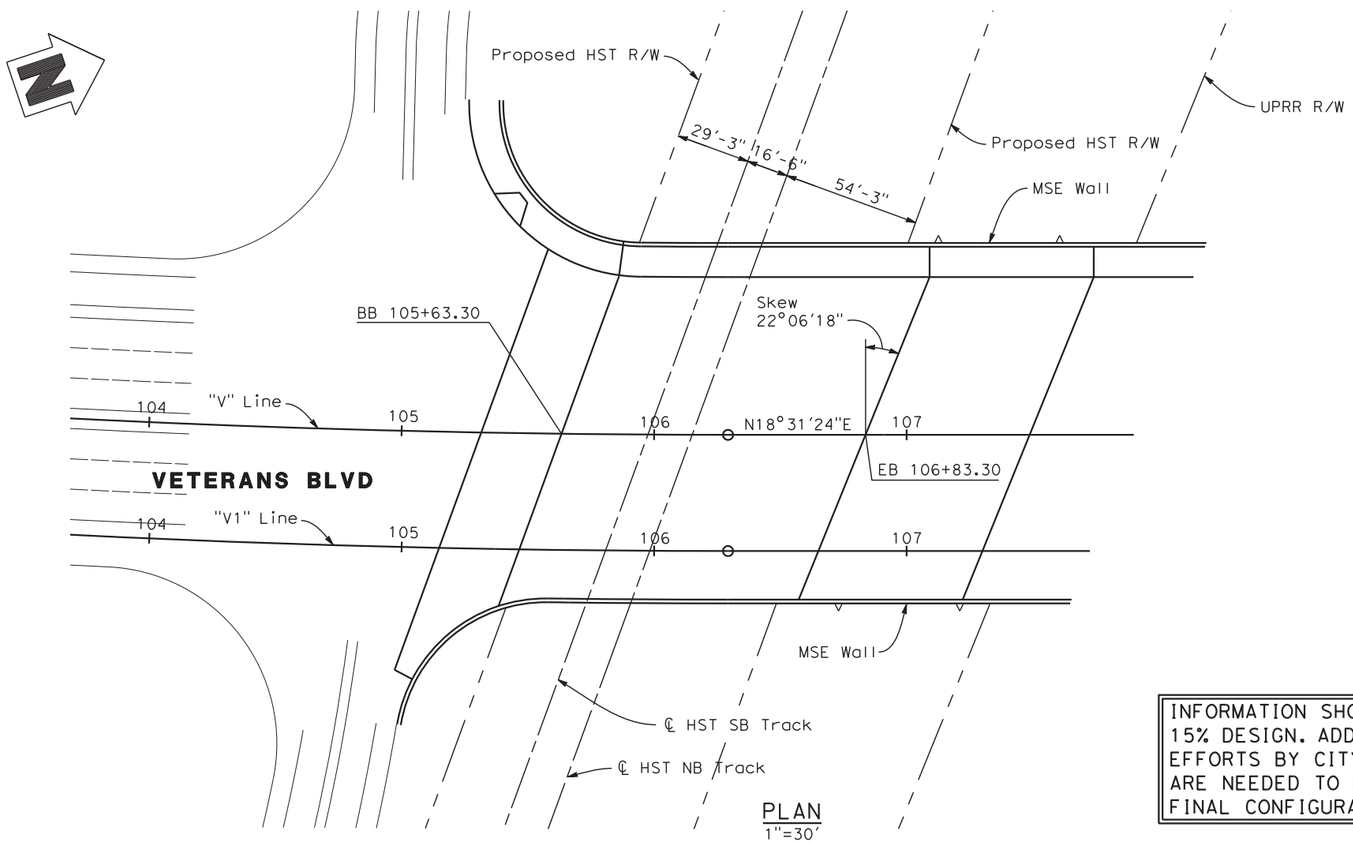

PLAN
1"=30'

DATE OF ESTIMATE	= 04-13-2011
BRIDGE REMOVAL	= -
STRUCTURE DEPTH	= 5'-3"
LENGTH	= 120'-0"
WIDTH	= 142'-6"
AREA	= 17,100 ft^2
COST/ft^2 INCLUDING 10% MOBILIZATION & 25% CONTINGENCY	= \$ 175/ft^2
TOTAL COST	= \$ 2,993,000

INFORMATION SHOWN IS BASED ON 15% DESIGN. ADDITIONAL DESIGN EFFORTS BY CITY OF FRESNO ARE NEEDED TO ESTABLISH THE FINAL CONFIGURATION.

REV	DATE	BY	CHK	APP	DESCRIPTION

DESIGNED BY
DRAWN BY
CHECKED BY
IN CHARGE
DATE 12/08/11

AECOM Technical Services, Inc.
2020 L Street, Suite 300
Sacramento, CA 95811
CH2MHILL

CALIFORNIA HIGH-SPEED RAIL AUTHORITY

CALIFORNIA HIGH-SPEED TRAIN PROJECT
SIERRA SUBDIVISION
PACKAGE 1A
ROADWAY
VETERANS BOULEVARD OVERHEAD
DRAFT GENERAL PLAN

CONTRACT NO.
DRAWING NO. ST-I1024
SCALE AS SHOWN
SHEET NO.

12/2/2011 10:22:02 AM CAHSRP-R1.TBL CHSR_half_black.plt C:\Documents and Settings\ychiu\My Documents\NDMProj\356751 - California High Speed Rail - SR99 Improvements\1S-ST-I1024.dgn
ychiu

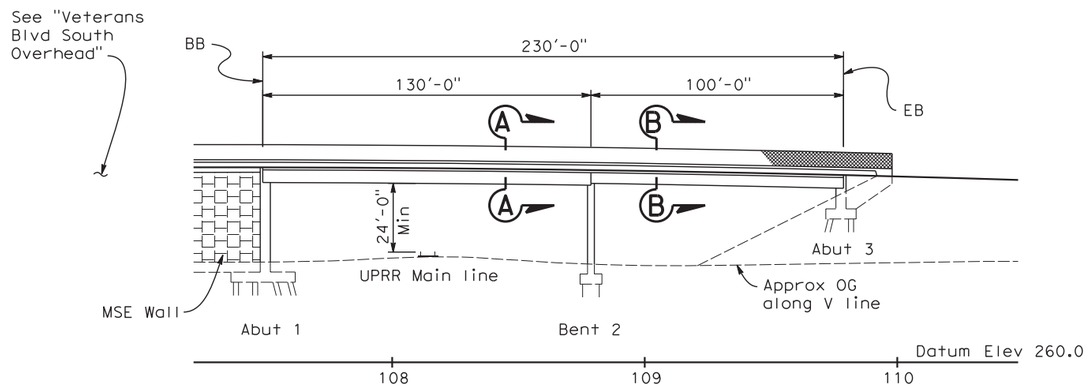

ELEVATION
1"=30'

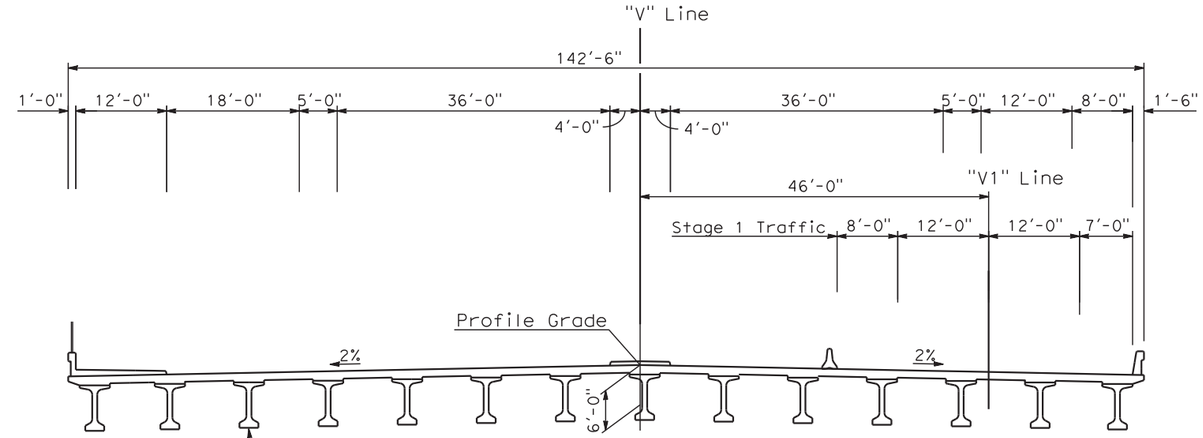

SECTION A-A
1"=10'

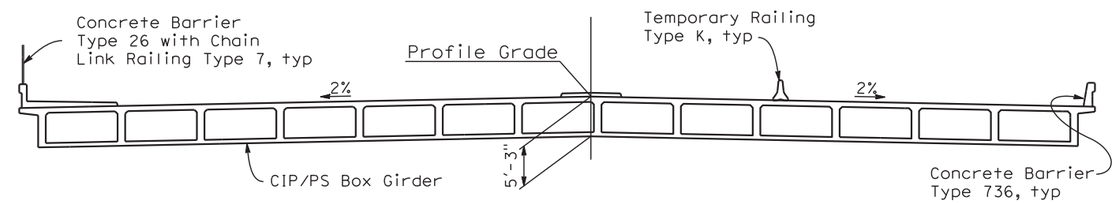

SECTION B-B
1"=10'

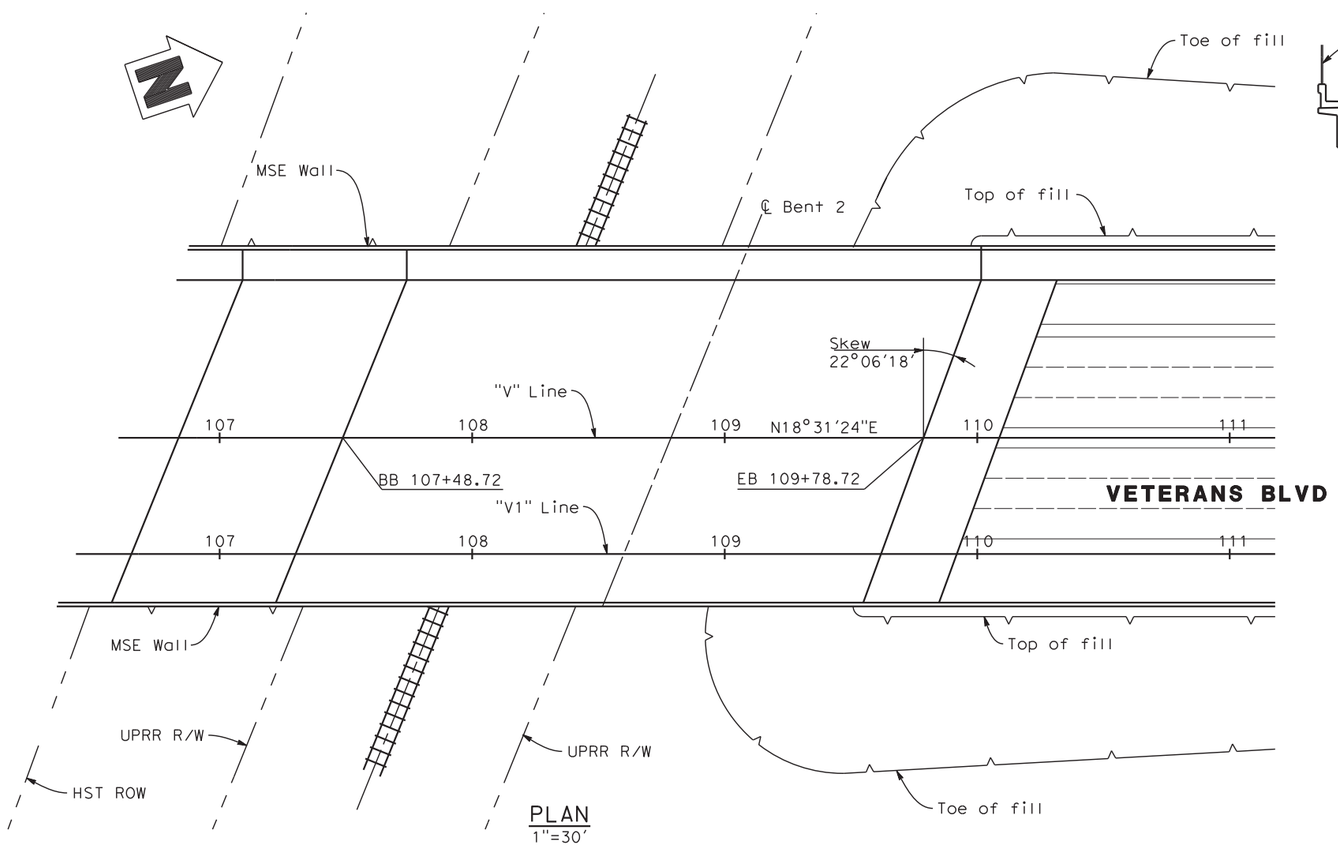

PLAN
1"=30'

DATE OF ESTIMATE	= 04-13-2011
BRIDGE REMOVAL	= -
STRUCTURE DEPTH	= 5'-3" TO 6'-0"
LENGTH	= 230'-0"
WIDTH	= 142'-6"
AREA	= 32,775 ft^2
COST/ft^2 INCLUDING 10% MOBILIZATION & 25% CONTINGENCY	= \$ 175/ft^2
TOTAL COST	= \$ 5,736,000

INFORMATION SHOWN IS BASED ON 15% DESIGN. ADDITIONAL DESIGN EFFORTS BY CITY OF FRESNO ARE NEEDED TO ESTABLISH THE FINAL CONFIGURATION.

REV	DATE	BY	CHK	APP	DESCRIPTION

DESIGNED BY
DRAWN BY
CHECKED BY
IN CHARGE
DATE 12/08/11

PROPOSED PRELIMINARY DESIGN

NOT FOR CONSTRUCTION

AECOM Technical Services, Inc.
2020 L Street, Suite 300
Sacramento, CA 95811
CH2MHILL

CALIFORNIA HIGH-SPEED RAIL AUTHORITY

CALIFORNIA HIGH-SPEED TRAIN PROJECT
SIERRA SUBDIVISION
PACKAGE 1A
ROADWAY
VETERANS BOULEVARD OVERHEAD
DRAFT GENERAL PLAN

CONTRACT NO.
DRAWING NO. ST-I1025
SCALE AS SHOWN
SHEET NO.

12/2/2011 10:23:02 AM CAHSRP-R1.TBL CHSR_half_black.plt C:\Documents and Settings\ychiu\My Documents\NDMProj\356751 - California High Speed Rail - SR99 Improvements\15-ST-I1025.dgn
ychiu

PROFILE GRADE
NO SCALE

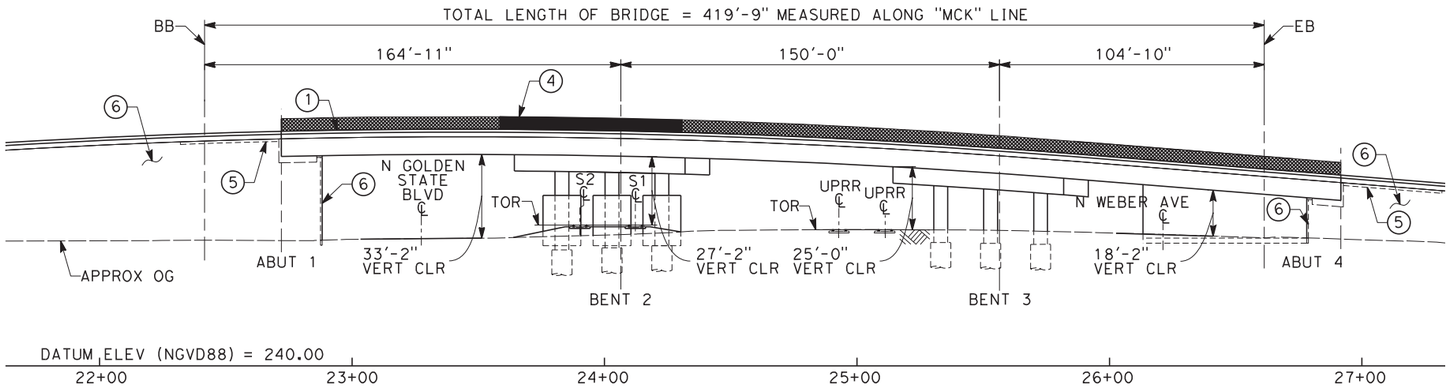

ELEVATION
SCALE: 1"=30'-0"

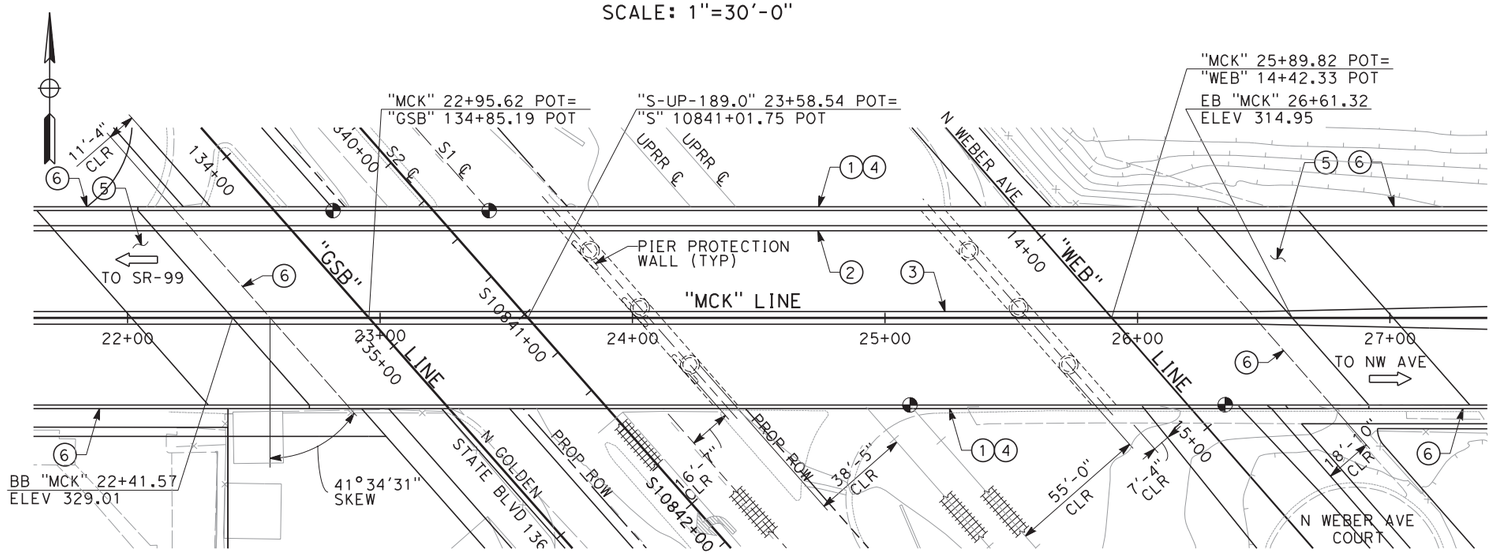

PLAN
SCALE: 1"=30'-0"

NOTES:

1. CONCRETE BARRIER (TYPE 736 MODIFIED)
2. CONCRETE BARRIER (TYPE 60)
3. BARRIER CURB
4. AR FENCE
5. STRUCTURE APPROACH SLAB
6. MSE RETAINING WALL
7. FUTURE UTILITY OPENING
8. FOR UTILITY INFORMATION, SEE UTILITY BASE MAP PLANS.
9. FOR INTRUSION DETECTION/PROTECTION, SEE ALIGNMENT PLANS.
10. OPENING FOR RELOCATED WATER LINE

LEGEND:

- INDICATES DIRECTION OF TRAFFIC
- INDICATES POINT OF MINIMUM VERTICAL CLEARANCE
- INDICATES RAILROAD AND HIGH-SPEED TRAIN TRACK

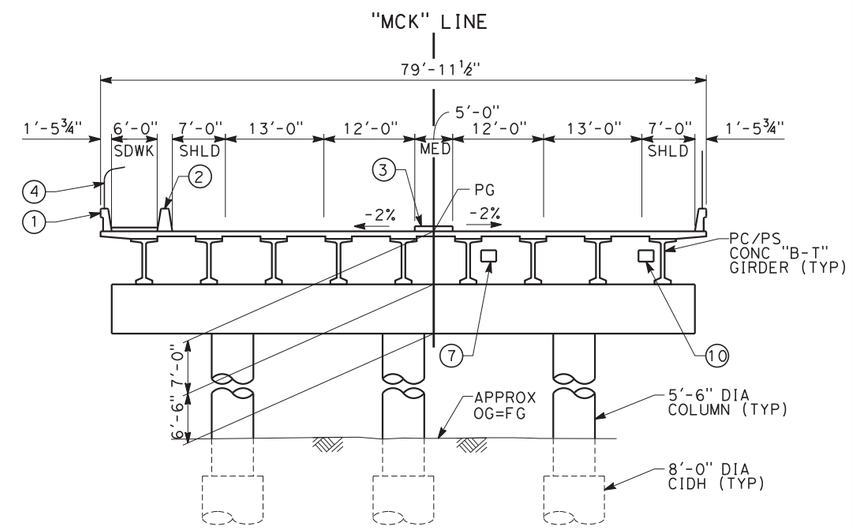

TYPICAL SECTION
SCALE: 1"=10'-0"

REV	DATE	BY	CHK	APP	DESCRIPTION

DESIGNED BY L. SMITH
DRAWN BY T. PRETZER
CHECKED BY E. MORAN
IN CHARGE Y. BERI
DATE 02/17/12

PROPOSED PRELIMINARY DESIGN

NOT FOR CONSTRUCTION

URS | HMM | ARUP
CALIFORNIA HIGH-SPEED TRAIN

CALIFORNIA HIGH-SPEED RAIL AUTHORITY

CALIFORNIA HIGH-SPEED TRAIN PROJECT
SIERRA SUBDIVISION
PACKAGE 1A
ROADWAY
DRAFT GENERAL PLAN
W MCKINLEY AVE

CONTRACT NO.
DRAWING NO. ST-K1026
SCALE AS SHOWN
SHEET NO.

BUR52804 2/10/2012 10:07:12 AM CAHSRP-r1.tbl CHSR_PDF_half_black.pltG:_Sacramento\URS\235413 CA HSR Fresno Palmdale\16.0 Drawings\S1 HSR06-0003\Sheet Files\Package#1\Structures\S1-ST-10001-MCK.dgn

PROFILE GRADE
NO SCALE

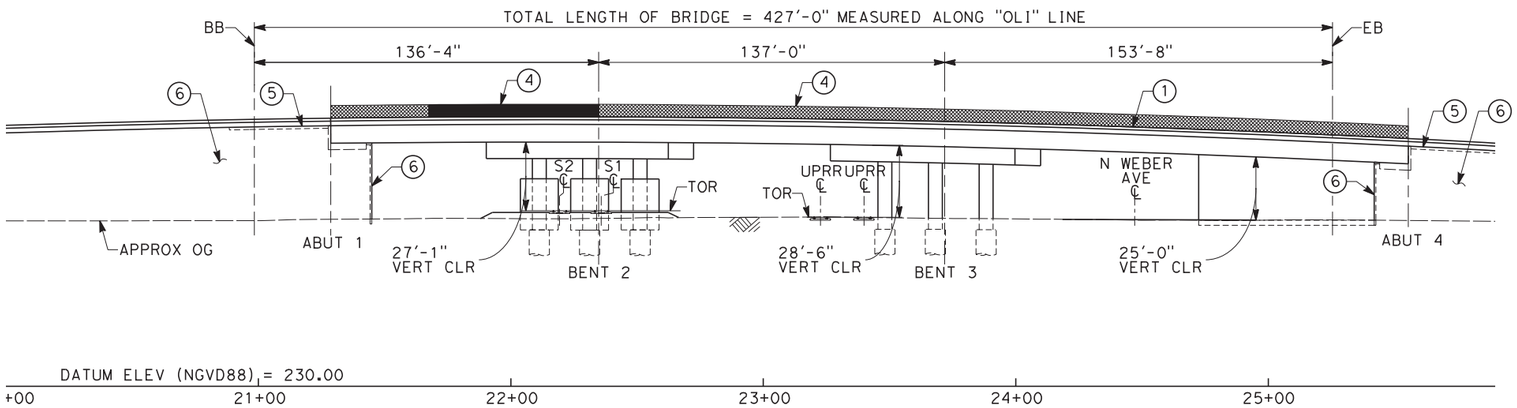

DEVELOPED ELEVATION
SCALE: 1"=30'-0"

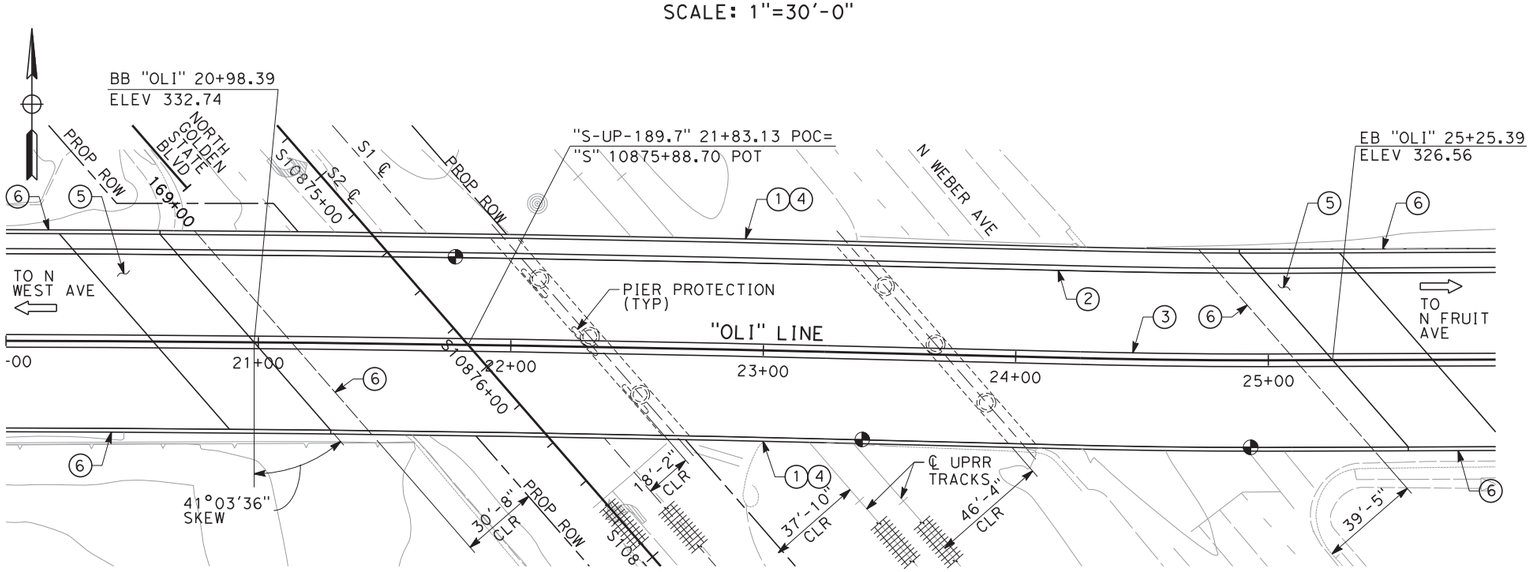

PLAN
SCALE: 1"=30'-0"

NOTES:

1. CONCRETE BARRIER (TYPE 736 MODIFIED)
2. CONCRETE BARRIER (TYPE 60)
3. BARRIER CURB
4. AR FENCE
5. STRUCTURE APPROACH SLAB
6. MSE RETAINING WALL
7. FUTURE UTILITY OPENING
8. FOR UTILITY INFORMATION, SEE UTILITY BASE MAP PLANS.
9. FOR INTRUSION DETECTION/PROTECTION, SEE ALIGNMENT PLANS.
10. OPENING FOR RELOCATED WATER LINE

LEGEND:

- INDICATES DIRECTION OF TRAFFIC
- INDICATES POINT OF MINIMUM VERTICAL CLEARANCE
- INDICATES RAILROAD AND HIGH-SPEED TRAIN TRACK

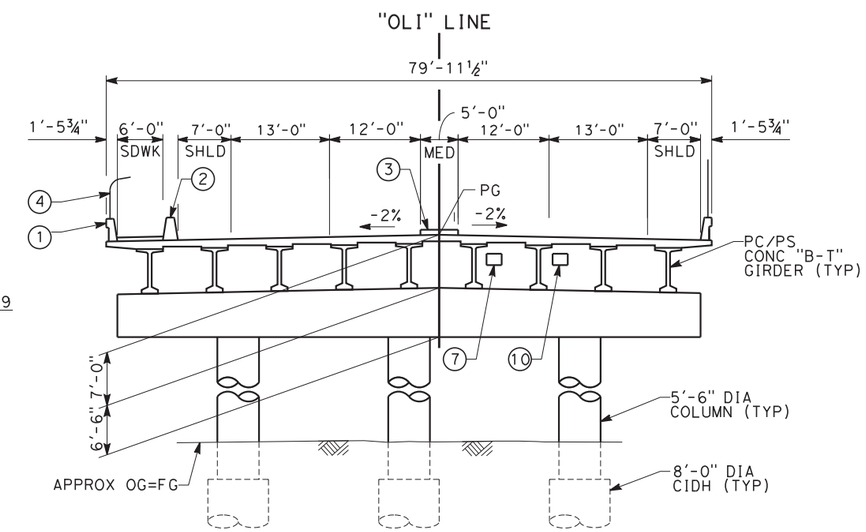

TYPICAL SECTION
SCALE: 1"=10'-0"

REV	DATE	BY	CHK	APP	DESCRIPTION

DESIGNED BY M. BURGARD
DRAWN BY D. BARNHART
CHECKED BY E. MORAN
IN CHARGE Y. BERI
DATE 02/17/12

PROPOSED PRELIMINARY DESIGN

NOT FOR CONSTRUCTION

URS | HMM | ARUP
CALIFORNIA HIGH-SPEED TRAIN

CALIFORNIA HIGH-SPEED RAIL AUTHORITY

CALIFORNIA HIGH-SPEED TRAIN PROJECT
SIERRA SUBDIVISION
PACKAGE 1A
ROADWAY
DRAFT GENERAL PLAN
W OLIVE AVE

CONTRACT NO.
DRAWING NO. ST-K1027
SCALE AS SHOWN
SHEET NO.

BUR52804 2/10/2012 10:08:29 AM CAHSRP-r1.tbl CHSR_PDF_half_black.pltG:_Sacramento\URS\235413 CA HSR Fresno Palmdale\16.0 Drawings\S1 HSR06-0003\Sheet Files\Package#1\Structures\S1-ST-10001-OLV.dgn

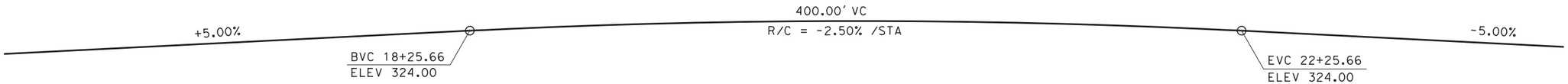

PROFILE GRADE
NO SCALE

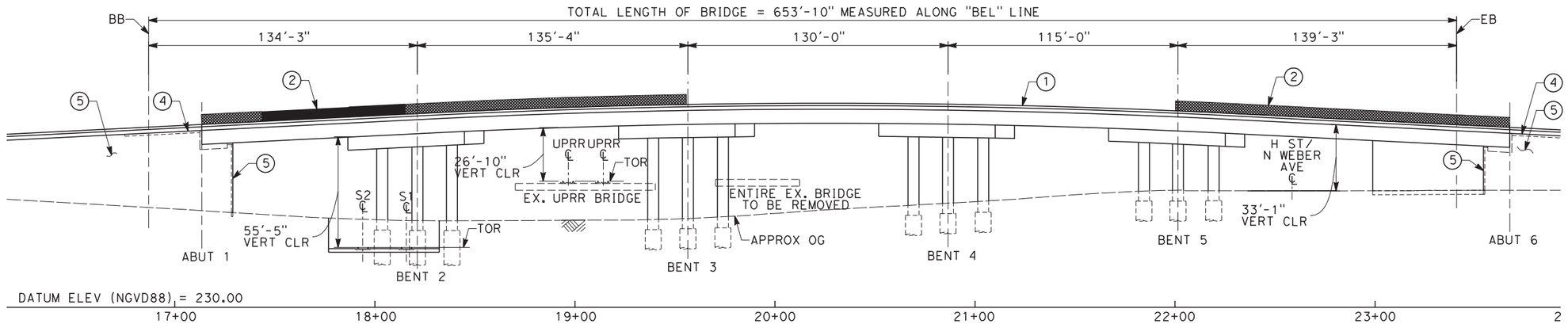

ELEVATION
SCALE: 1"=30'-0"

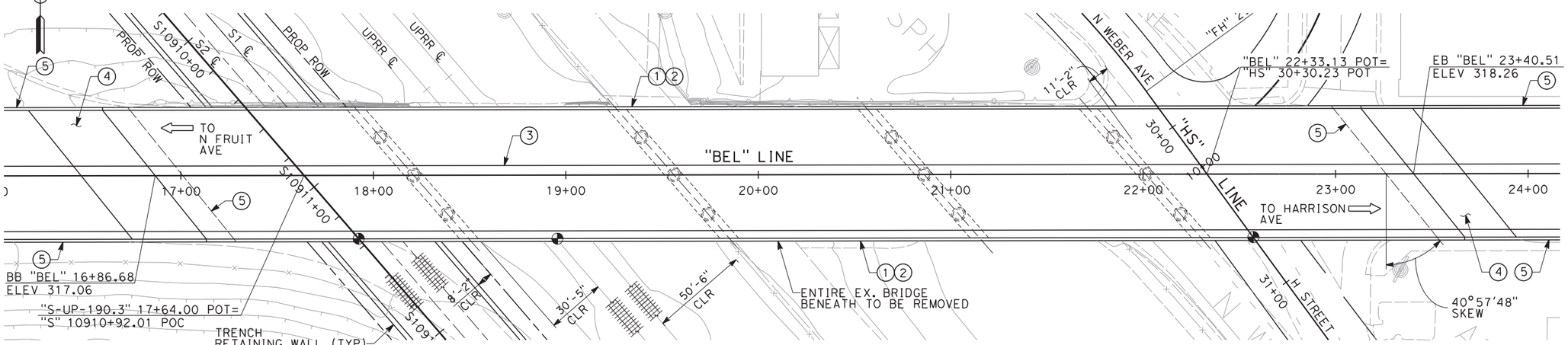

PLAN
SCALE: 1"=30'-0"

NOTES:

1. CONCRETE BARRIER (TYPE 736 MODIFIED)
2. AR FENCE
3. BARRIER CURB
4. STRUCTURE APPROACH SLAB
5. MSE RETAINING WALL
6. FOR UTILITY INFORMATION, SEE UTILITY BASE MAP PLANS.
7. FOR INTRUSION DETECTION/ PROTECTION, SEE ALIGNMENT PLANS.
8. SEE NEXT SHEET (ST-K1029) FOR TYPICAL SECTION

LEGEND:

- INDICATES DIRECTION OF TRAFFIC
- INDICATES POINT OF MINIMUM VERTICAL CLEARANCE
- INDICATES RAILROAD AND HIGH-SPEED TRAIN TRACK

REV	DATE	BY	CHK	APP	DESCRIPTION

DESIGNED BY L. SMITH
DRAWN BY T. PRETZER
CHECKED BY E. MORAN
IN CHARGE Y. BERI
DATE 02/17/12

PROPOSED PRELIMINARY DESIGN

NOT FOR CONSTRUCTION

URS | HMM | ARUP
CALIFORNIA HIGH-SPEED TRAIN

CALIFORNIA HIGH-SPEED RAIL AUTHORITY

CALIFORNIA HIGH-SPEED TRAIN PROJECT
SIERRA SUBDIVISION
PACKAGE 1A
ROADWAY
DRAFT GENERAL PLAN
BELMONT AVE

CONTRACT NO.
DRAWING NO. ST-K1028
SCALE AS SHOWN
SHEET NO.

BUR52804 2/13/2012 1:00:51 PM CAHSRP-r1.tbl CHSR_PDF_half_black.pltG:_Sacramento\URS\235413 CA HSR Fresno Palmdale\16.0 Drawings\S1 HSR06-0003\Sheet Files\Package#1\Structures\S1-ST-10001-BEL.dgn

NOTES:

1. CONCRETE BARRIER (TYPE 736 MODIFIED)
2. AR FENCE
3. BARRIER CURB
4. FUTURE UTILITY OPENING
5. FOR UTILITY INFORMATION, SEE UTILITY BASE MAP PLANS.
6. FOR INTRUSION DETECTION/PROTECTION, SEE ALIGNMENT PLANS.

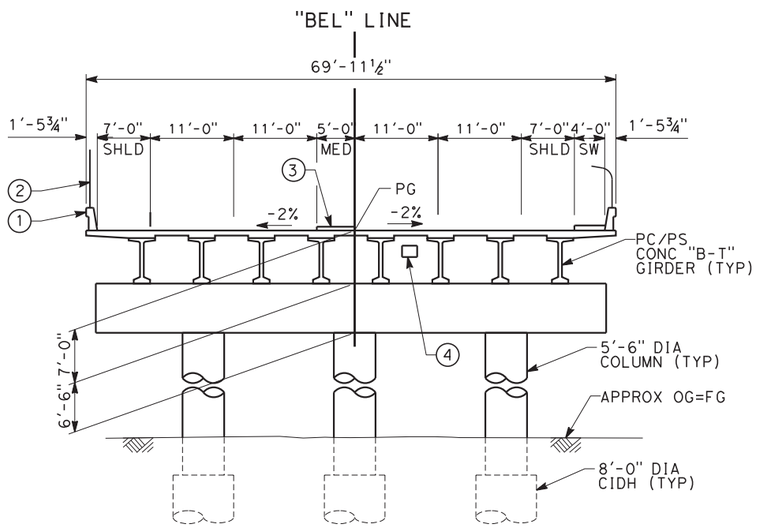

TYPICAL SECTION
SCALE: 1"=10'-0"

REV	DATE	BY	CHK	APP	DESCRIPTION

DESIGNED BY L. SMITH
DRAWN BY T. PRETZER
CHECKED BY E. MORAN
IN CHARGE Y. BERI
DATE 02/17/12

PROPOSED PRELIMINARY DESIGN

NOT FOR CONSTRUCTION

URS | HMM | ARUP
CALIFORNIA HIGH-SPEED TRAIN

CALIFORNIA HIGH-SPEED RAIL AUTHORITY

CALIFORNIA HIGH-SPEED TRAIN PROJECT
SIERRA SUBDIVISION
PACKAGE 1A
ROADWAY
DRAFT GENERAL PLAN
BELMONT AVE

CONTRACT NO.
DRAWING NO. ST-K1029
SCALE AS SHOWN
SHEET NO.

BUR52804 2/10/2012 10:11:03 AM CAHSRP-r1.tbl CHSR_PDF_half_black.pltG:_Sacramento\URS\235413 CA HSR Fresno Palmdale\16.0 Drawings\S1 HSR06-0003\Sheet Files\Package#1\Structures\S1-ST-10002-BEL.dgn

CIVIL GENERAL NOTES

A. GENERAL SITE NOTES

1. FIELD VERIFY ALL EXISTING SITE CONDITIONS PRIOR TO THE COMMENCEMENT OF WORK AND REPORT ANY DISCREPANCIES TO THE OWNER'SREPRESENTATIVE. VISIT THE SITE AND BECOME FAMILIAR WITH THE SITE CONDITIONS PRIOR TO BIDDING.

2. ALL CONSTRUCTION ACTIVITIES SHALL BE COORDINATED WITH LOCAL AND STATE JURISDICTION INSPECTOR(S). NOTIFY LOCAL AND STATE JURISDICTION INSPECTOR(S) _____ DAYS PRIOR TO THE START OF ANY CONSTRUCTION.

3. ALL DAMAGE CAUSED BY THE PROJECT SHALL BE RESTORED TO AN "AS GOOD OR BETTER" CONDITION.

4. LEAVE THE PROJECT AREA FREE OF DEBRIS AND UNUSED MATERIAL UPON PROJECT COMPLETION.

5. FOR STANDARD GENERAL ABBREVIATIONS, SEE DRAWINGS SD-GE-001 THRU SD-GE-004.

6. FOR STANDARD GENERAL SYMBOLS, SEE DRAWINGS SD-GE-005 THRU SD-GE-007.

7. "ORIGINAL GROUND" SHOWN ON CROSS SECTIONS REFERS TO THE APPROXIMATE EXISTING GROUND LINE AT THE DESIGNATED CENTERLINE, BASELINE, LAYOUT LINE OR SECTION LINE.

8. MAINTAIN EXISTING SITE SURVEY CONTROL POINTS AND BENCH MARKS. SURVEY CONTROL POINTS OR BENCH MARKS DAMAGED OR REMOVED AS A RESULT OF THE PROJECT SHALL BE RESTORED BY A REGISTERED LAND SURVEYOR.

9. ALL WORK SHALL CONFORM TO ALL LOCAL, STATE AND FEDERAL CODES AND ORDINANCES IN EFFECT. PROVIDE AND MAINTAIN PROPER BARRICADES, RAILINGS, GUARDS, FLAGGING, LIGHTING, OR OTHER DEVICES NECESSARY FOR THE PROTECTION OF LIFE AND PROPERTY.

10. VERIFY ALL CONTROLLING FIELD DIMENSIONS BEFORE ORDERING OR FABRICATING MATERIALS.

11. ALL HORIZONTAL AND VERTICAL DISTANCES ARE IN FEET AND /OR DECIMALS OF FOOT EXCEPT AS NOTED OTHERWISE.

12. ACCESS ROAD TYPE SHALL BE CONFIRMED ON A SITE-BY-SITE BASIS.

B. DEMOLITION NOTES

1. REVIEW ALL ENVIRONMENTAL STUDIES AND REQUIREMENTS PRIOR TO BIDDING.

2. MAINTAIN TEMPORARY ACCESS DURING CONSTRUCTION. UTILITY OUTAGE AND ACCESS CLOSURES DURING CONSTRUCTION REQUIRE A MINIMUM OF _____ DAYS NOTICE TO OWNER OR SITE TENANTS.

3. FOLLOW LOCAL JURISDICTION REQUIREMENTS FOR CLEARING AND GRUBBING.

C. GRADING

1. DO NOT PERFORM ANY GRADING OPERATION SO AS TO CAUSE FALLING ROCKS, SOIL OR DEBRIS IN ANY FORM TO FALL, SLIDE OR FLOW ONTO ADJOINING PROPERTIES, STREETS OR NATURAL WATERCOURSES. SHOULD SUCH VIOLATION OCCUR ALL NECESSARY REMEDIAL ACTIONS MUST BE MADE IMMEDIATELY.

2. KEEP THE PROJECT AREA AND SURROUNDING AREA FREE FROM DUST NUISANCE.

3. PROVISIONS SHALL BE MADE TO PREVENT SURFACE WATERS FROM DAMAGING THE CUT FACE OF AN EXCAVATION OR THE SLOPED SURFACES OF A FILL. FURTHERMORE, PROVISIONS SHALL BE MADE TO PREVENT SEDIMENT-LADEN RUNOFF FROM LEAVING THE SITE.

4. ALL SLOPED AND EXPOSED AREAS SHALL BE SODDED OR PLANTED AS SOON AS FINAL GRADES HAVE BEEN ESTABLISHED. PLANTING SHALL NOT BE DELAYED UNTIL ALL GRADING WORK HAS BEEN COMPLETED. GRADING TO FINAL GRADE SHALL BE CONTINUOUS, AND ANY AREA WITHIN WHICH WORK HAS BEEN INTERRUPTED OR DELAYED SHALL BE PLANTED.

5. THE LIMITS OF THE AREA TO BE GRADED SHALL BE FLAGGED BEFORE THE COMMENCEMENT OF THE GRADING WORK.

6. ALL GRADING OPERATIONS SHALL BE PERFORMED IN CONFORMANCE WITH THE APPLICABLE PROVISIONS OF THE WATER POLLUTION CONTROL AND WATER QUALITY STANDARDS CONTAINED IN THE LATEST CALTRANS STORM WATER QUALITY HANDBOOKS.

D. TEMPORARY TRAFFIC CONTROL

1. OBTAIN APPROVAL FOR TRAFFIC CONTROL PLAN FROM AGENCY HAVING JURISDICTION OVER THE ROADWAY PRIOR TO IMPLEMENTATION OF TEMPORARY TRAFFIC CONTROL.

E. PUBLIC HEATH, SAFETY, AND CONVENIENCE NOTES

1. OBSERVE AND COMPLY WITH ALL FEDERAL, STATE, AND LOCAL LAWS REQUIRED FOR THE PROTECTION OF PUBLIC HEALTH, SAFETY, AND ENVIRONMENTAL QUALITY.

2. APPLY FOR A CONSTRUCTION PERMIT WITH A NOISE POLLUTION CONTROL PLAN.

F. STOCKPILING NOTES

1. IF THE STOCKPILING WORK INVOLVES CONTAMINATED SOIL, THEN ALL STOCKPILING WORK SHALL BE DONE IN CONFORMANCE WITH APPLICABLE STATE AND FEDERAL REQUIREMENTS.

G. GRUBBING AND CLEARING NOTES

1. WHERE APPLICABLE AND FEASIBLE THE MEASURES TO CONTROL EROSION AND OTHER POLLUTANTS SHALL BE IN PLACE BEFORE ANY GRUBBING WORK IS INITIATED.

H. ADDITIONAL INFORMATION

1. THE FOLLOWING TABLES PROVIDE INFORMATION ON THE DESIGN SPEED OF CITY OF FRESNO ROADWAYS WITHIN THE LIMITS OF WORK:

DESIGN SPEED TABLE (NORTH OF CLINTON AVE)

STREET NAME	ALIGNMENT DESIGNATION	DESIGN SPEED (MPH)
GOLDEN STATE BLVD	G1	45
GOLDEN STATE BLVD	G2	40*
GOLDEN STATE BLVD	G3	45
GOLDEN STATE BLVD (SOUTH OF SWIFT AVE)	G3	35
SHAW AVE	SH	35
CORNELIA AVENUE/SANTA ANA AVENUE	CS	30
VETERANS BLVD	V	45*
VETERANS BLVD RAMP	VR	25*
BULLARD AVENUE	BU	40*
CLINTON AVE	C	45
ASHLAN AVE	AS	40
BARSTOW AVENUE	B	25
KATHRYN WAY	K	25
STATE AVENUE	ST	25
MARKET AVENUE	M	25
MOTEL DRIVE	AS6	25
ASHLAN/MOTEL DRIVE RIGHT TURN	AS7	25
JENNIFER AVENUE	J	25

*15% DESIGN - PENDING UPDATES BY CITY OF FRESNO

DESIGN SPEED TABLE (SOUTH OF CLINTON AVE)

STREET NAME	ALIGNMENT DESIGNATION	DESIGN SPEED (MPH)
W MCKINLEY AVE	MCK	30
W OLIVE AVE	OLI	35
BELMONT AVE	BEL	30
MCKINLEY AVE CONNECTOR	MCC	30
N GOLDEN STATE BLVD	GSB	50
N WEBER AVE	WEB	40
N H ST	HS	35
N WESLEY AVE	WSL	<20
N WEST AVE	WES	30
N CARUTH AVE	CAR	30
N FARRIS AVE	FAR	30

REV	DATE	BY	CHK	APP	DESCRIPTION

DESIGNED BY V. CHIO
DRAWN BY D. ELKINS
CHECKED BY J. MATSUI-DRURY
IN CHARGE F. NOBARI
DATE 02/01/2012

PROPOSED PRELIMINARY DESIGN

NOT FOR CONSTRUCTION

AECOM Technical Services, Inc.
2020 L Street, Suite 300
Sacramento, CA 95811
CH2MHILL

CALIFORNIA HIGH-SPEED RAIL AUTHORITY

CALIFORNIA HIGH-SPEED TRAIN PROJECT
SIERRA SUBDIVISION
PACKAGE 1A
ROADWAY
GENERAL NOTES

CONTRACT NO.
DRAWING NO. CV-GE001
SCALE AS SHOWN
SHEET NO.

sleong 2/13/2012 4:43:06 PM CAHSRP-R1.TBL CHSR_half_black-pdf995.pc4 C:\Documents and Settings\sleong\My Documents\NDMProj\356751 - California High Speed Rail - SR99 Improvements\X-GE-ANNO-GENERAL-NOT

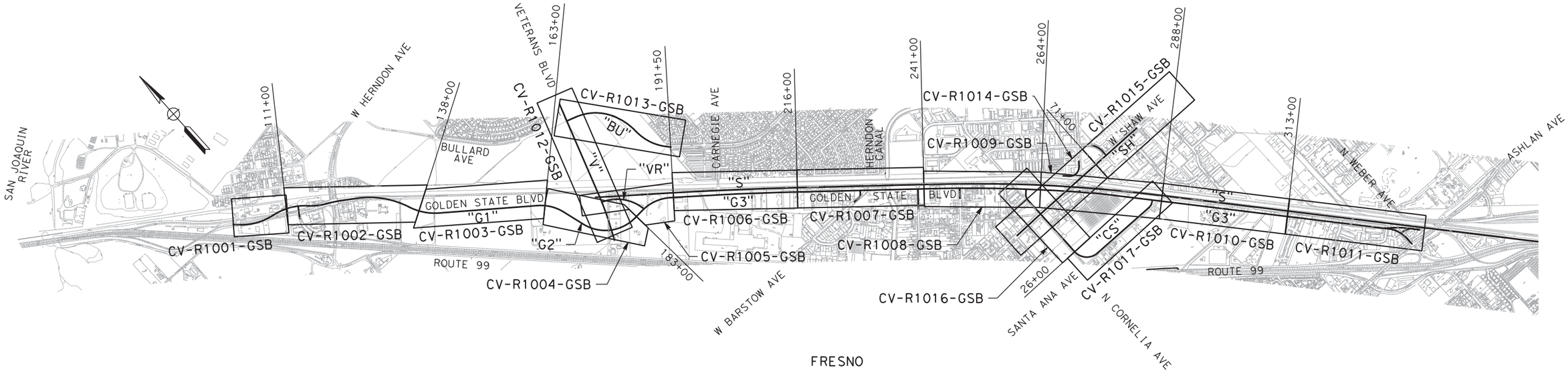

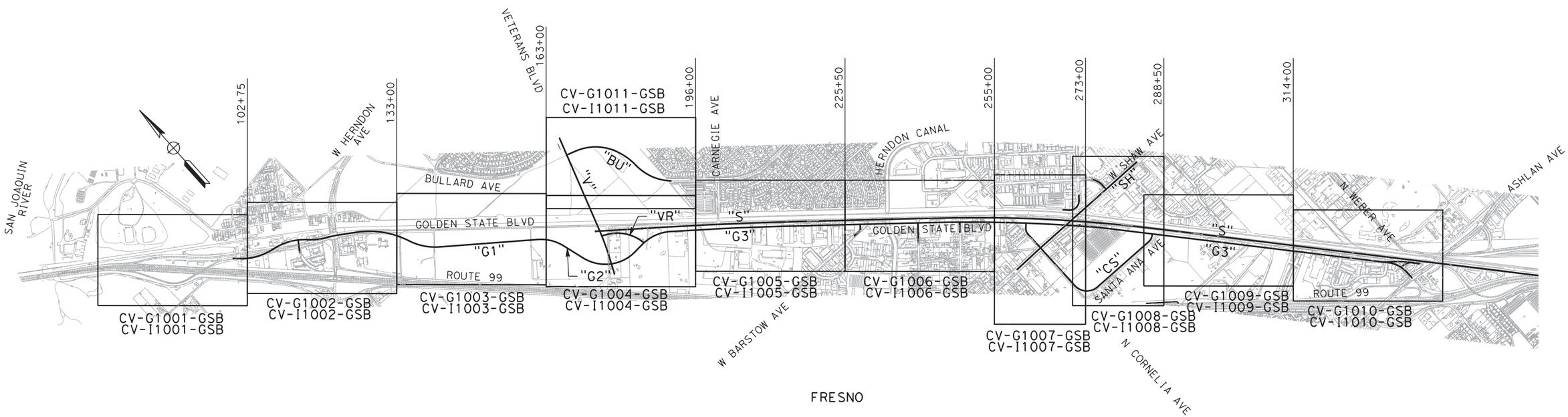

1000 0 1000 2000

1"=1000'

SCALE APPLICABLE FOR FULL SIZE ONLY

REV	DATE	BY	CHK	APP	DESCRIPTION

DESIGNED BY V. CHIO
DRAWN BY D. ELKINS
CHECKED BY L. HEUSTON
IN CHARGE F. NOBARI
DATE 11/22/11

PROPOSED PRELIMINARY DESIGN

NOT FOR CONSTRUCTION

AECOM Technical Services, Inc.
2020 L Street, Suite 300
Sacramento, CA 95811
CH2MHILL

CALIFORNIA HIGH-SPEED RAIL AUTHORITY

CALIFORNIA HIGH-SPEED TRAIN PROJECT
SIERRA SUBDIVISION
PACKAGE 1A
ROADWAY
KEY MAP
GOLDEN STATE BOULEVARD

CONTRACT NO.
DRAWING NO. CV-R0001
SCALE AS SHOWN
SHEET NO.

lwebster 11/15/2011 2:14:54 PM CAHSRP-R1.TBL CHSR_half_black.plt C:\Documents and Settings\lwebster\My Documents\NDMProj\356751 - California High Speed Rail - SR99 Improvements\1S-CV-R0001-GSB.dgn

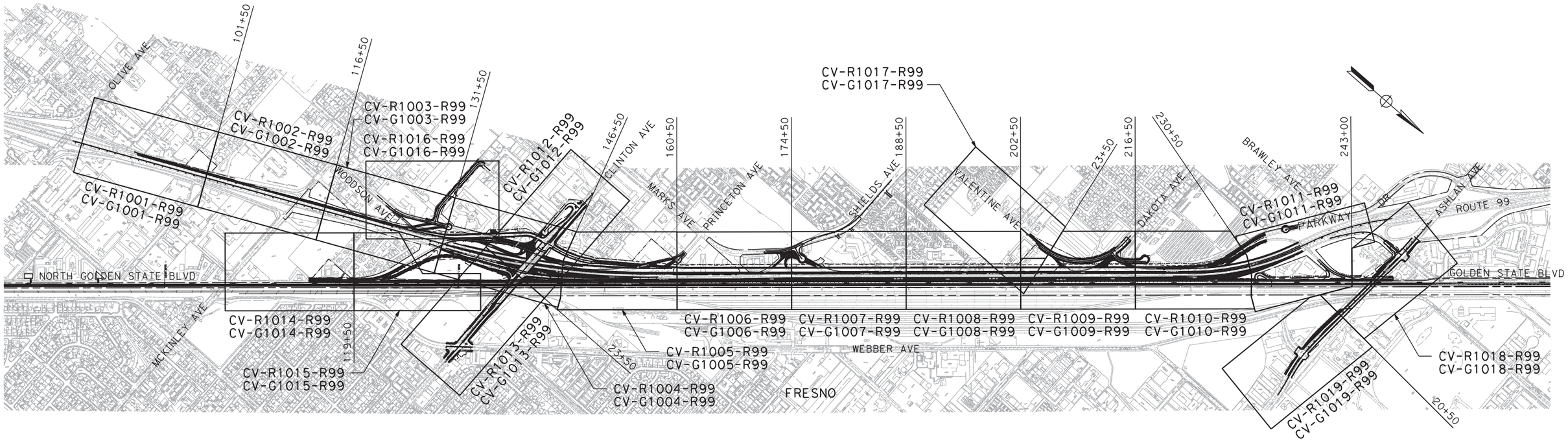

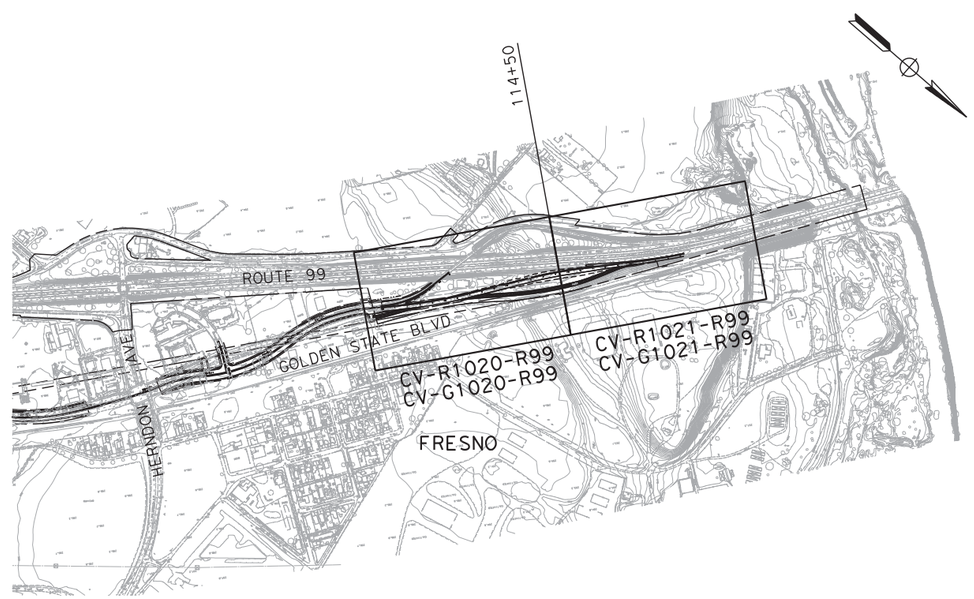

600 0 600 1200

1"=600'

SCALE APPLICABLE FOR FULL SIZE ONLY

REV	DATE	BY	CHK	APP	DESCRIPTION

DESIGNED BY G. MANOREK
DRAWN BY B. CHAN
CHECKED BY L. HEUSTON
IN CHARGE F. NOBARI
DATE 11/22/11

PROPOSED PRELIMINARY DESIGN

NOT FOR CONSTRUCTION

AECOM Technical Services, Inc.
2020 L Street, Suite 300
Sacramento, CA 95811

CH2MHILL

CALIFORNIA HIGH-SPEED RAIL AUTHORITY

CALIFORNIA HIGH-SPEED TRAIN PROJECT
SIERRA SUBDIVISION
PACKAGE 1A
ROADWAY
KEY MAP
SR 99 RE-ALIGNMENT

CONTRACT NO.
DRAWING NO. CV-R0002
SCALE AS SHOWN
SHEET NO.

lwebster 11/17/2011 10:37:01 AM CAHSRP-R1.TBL CHSR_half_black.plt C:\Documents and Settings\lwebster\My Documents\NDMProj\356751 - California High Speed Rail - SR99 Improvements\15-CV-R0002-R99.dgn

LINE DATA

NO.	BEARING	DISTANCE
1	S 45°59'10" E	125.34'

CURVE DATA

NO.	R	Δ	T	L
1	1130.00'	35°29'35"	361.64'	700.00'
2	1130.00'	36°28'00"	372.25'	719.20'

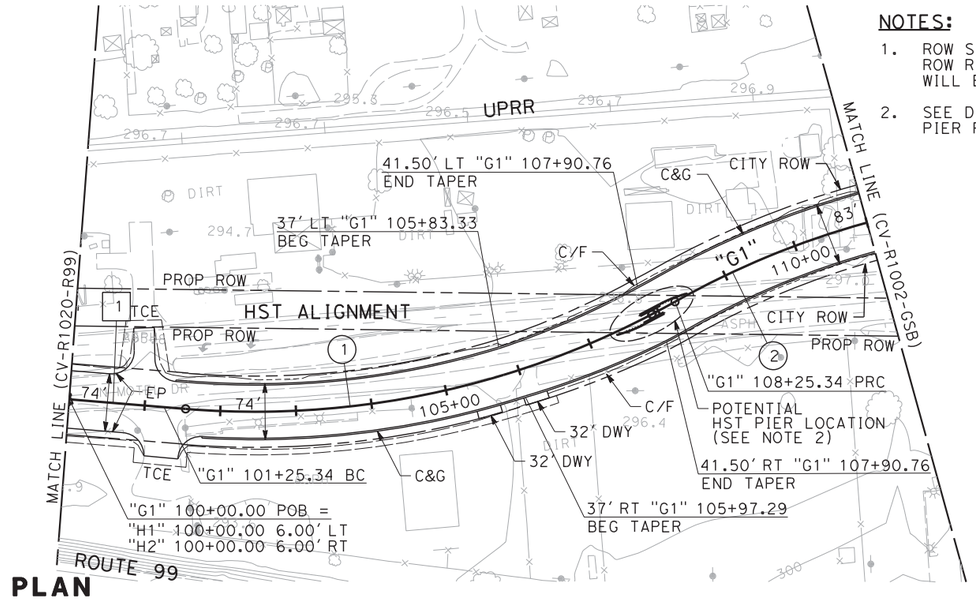

PLAN

NOTES:

1. ROW SHOWN REPRESENTS THE MINIMUM ANTICIPATED ROW REQUIREMENTS. ACCURATE ROW AND ACCESS DATA WILL BE MADE AVAILABLE PRIOR TO AWARD.
2. SEE DESIGN MANUAL FOR DETAILS OF PIER PROTECTION REQUIREMENT.

100 0 100 200
1"=100' HOR
SCALE APPLICABLE FOR FULL SIZE ONLY

10 0 10 20
1"=10' VERT
SCALE APPLICABLE FOR FULL SIZE ONLY

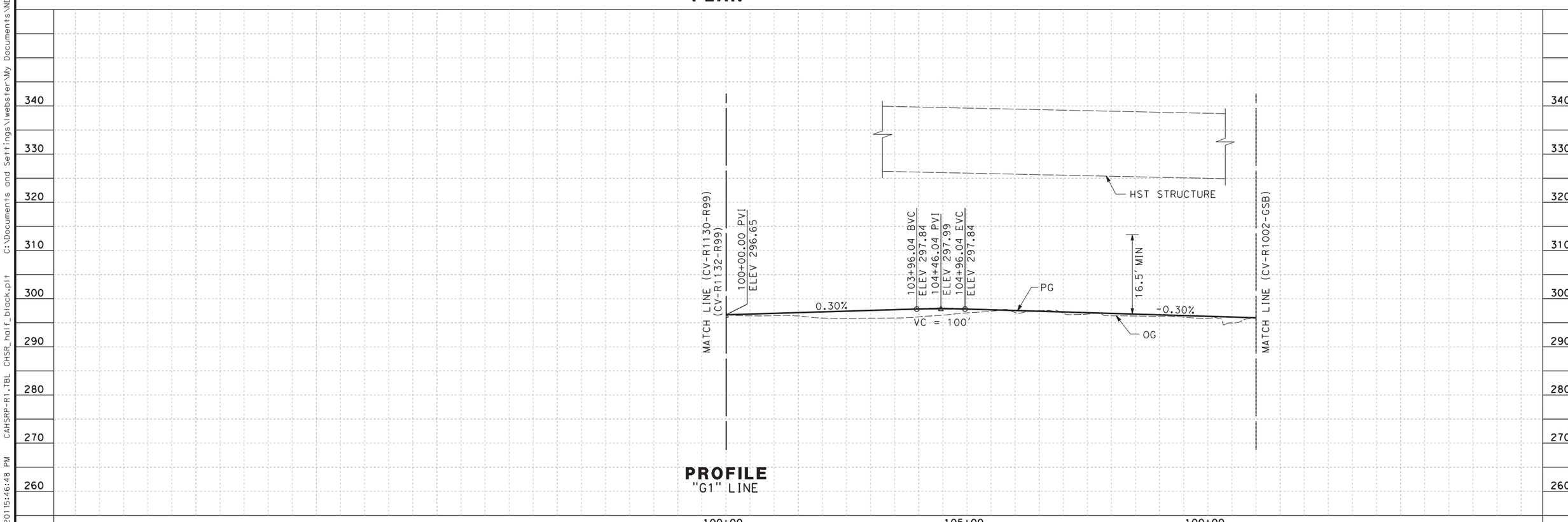

PROFILE
"G1" LINE

REV	DATE	BY	CHK	APP	DESCRIPTION

DESIGNED BY V. CHIO
DRAWN BY D. ELKINS
CHECKED BY L. HEUSTON
IN CHARGE F. NOBARI
DATE 11/22/11

PROPOSED PRELIMINARY DESIGN

NOT FOR CONSTRUCTION

AECOM Technical Services, Inc.
2020 L Street, Suite 300
Sacramento, CA 95811
CH2MHILL

CALIFORNIA HIGH-SPEED RAIL AUTHORITY

CALIFORNIA HIGH-SPEED TRAIN PROJECT
SIERRA SUBDIVISION
PACKAGE 1A
ROADWAY
PLAN AND PROFILE
GOLDEN STATE BOULEVARD

CONTRACT NO.
DRAWING NO. CV-R1001-GSB
SCALE AS SHOWN
SHEET NO.

lwebster 11/16/2011 5:46:48 PM CAHSRP-R1.TBL CHSR_half_black.plt C:\Documents and Settings\lwebster\My Documents\NDMProj\356751 - California High Speed Rail - SR99 Improvements\1S-CV-R1001-GSB.dgn

CURVE DATA

NO.	R	Δ	T	L
2	1130.00′	36°28′00"	372.25′	719.20′
3	500.00′	11°27′33"	50.17′	100.00′
4	430.00′	18°30′18"	184.08′	364.96′

LINE DATA

NO.	BEARING	DISTANCE
2	S 35°21′21" W	152.07′
3	S 56°27′10" E	331.20′

NOTES:

1. ROW SHOWN REPRESENTS THE MINIMUM ANTICIPATED ROW REQUIREMENTS. ACCURATE ROW AND ACCESS DATA WILL BE MADE AVAILABLE PRIOR TO AWARD.
2. EXISTING FMFCD BASIN TO BE RELOCATED PRIOR TO CONSTRUCTION OF ROADWAY IMPROVEMENT. SEE SPECIAL PROVISIONS FOR DETAIL REQUIREMENTS.
3. SEE DESIGN MANUAL FOR DETAILS OF PIER PROTECTION REQUIREMENTS.

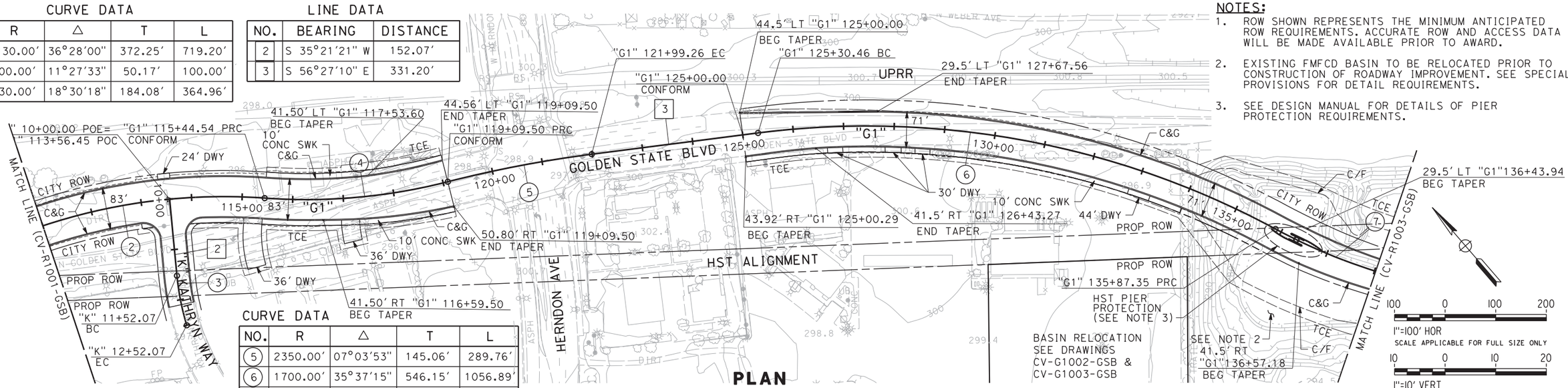

CURVE DATA

NO.	R	Δ	T	L
5	2350.00′	07°03′53"	145.06′	289.76′
6	1700.00′	35°37′15"	546.15′	1056.89′
7	1130.00′	31°31′44"	319.00′	621.82′

PLAN

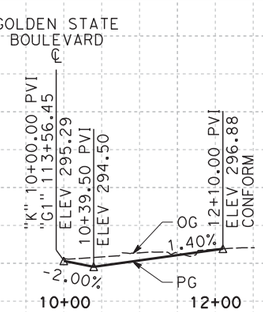

PROFILE
"K" LINE

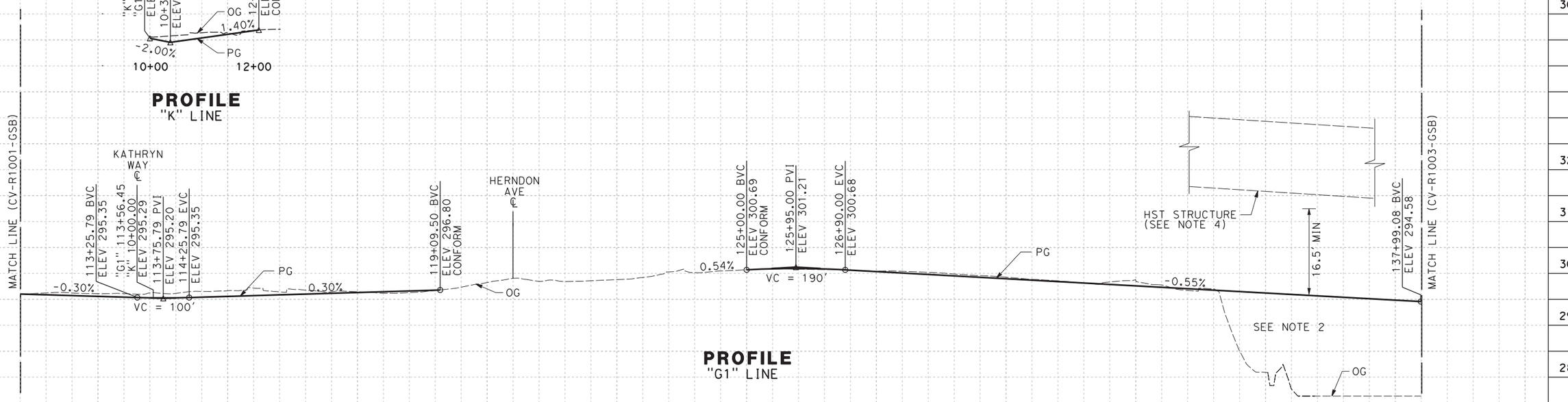

PROFILE
"G1" LINE

REV	DATE	BY	CHK	APP	DESCRIPTION

DESIGNED BY V. CHIO
DRAWN BY D. ELKINS
CHECKED BY L. HEUSTON
IN CHARGE F. NOBARI
DATE 11/22/11

PROPOSED PRELIMINARY DESIGN

NOT FOR CONSTRUCTION

AECOM Technical Services, Inc.
2020 L Street, Suite 300
Sacramento, CA 95811
CH2MHILL

CALIFORNIA HIGH-SPEED RAIL AUTHORITY

CALIFORNIA HIGH-SPEED TRAIN PROJECT
SIERRA SUBDIVISION
PACKAGE 1A
ROADWAY
PLAN AND PROFILE
GOLDEN STATE BOULEVARD

CONTRACT NO.
DRAWING NO. CV-R1002-GSB
SCALE AS SHOWN
SHEET NO.

lwebster 11/16/2011 5:55:19 PM CAHSRP-R1.TBL CHSR_half_black.plt C:\Documents and Settings\lwebster\My Documents\NDMProj\356751 - California High Speed Rail - SR99 Improvements\15-CV-R1002-GSB.dgn

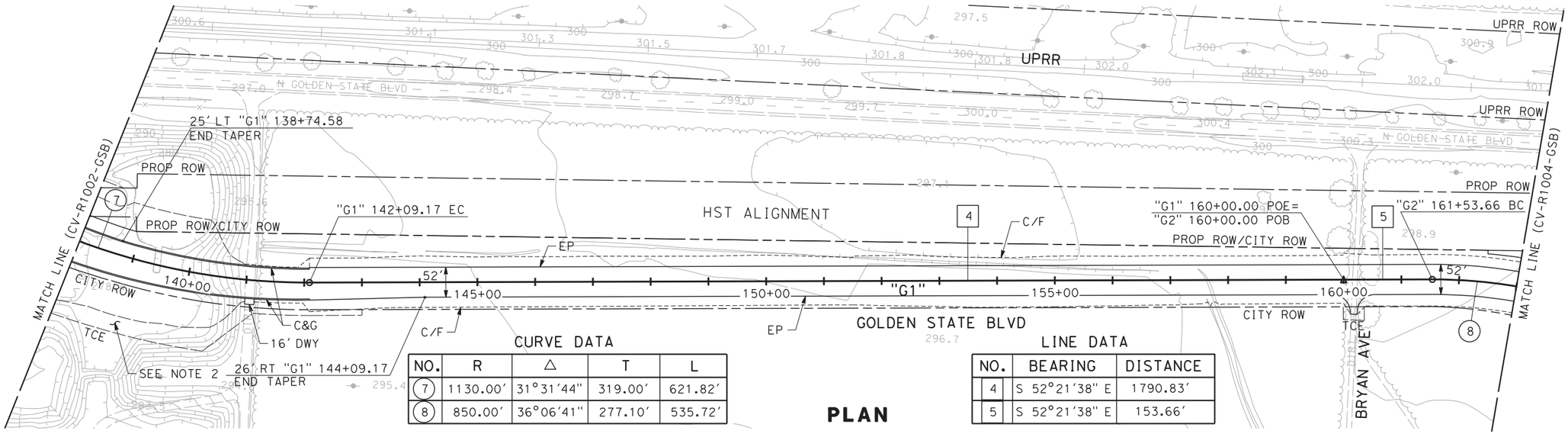

NOTES:

1. ROW SHOWN REPRESENTS THE MINIMUM ANTICIPATED ROW REQUIREMENTS. ACCURATE ROW AND ACCESS DATA WILL BE MADE AVAILABLE PRIOR TO AWARD.
2. EXISTING FMFCD BASIN TO BE RELOCATED PRIOR TO CONSTRUCTION. SEE SPECIAL PROVISIONS FOR DETAIL REQUIREMENTS

100 0 100 200
1"=100' HOR
SCALE APPLICABLE FOR FULL SIZE ONLY

10 0 10 20
1"=10' VERT
SCALE APPLICABLE FOR FULL SIZE ONLY

CURVE DATA

NO.	R	Δ	T	L
7	1130.00'	31°31'44"	319.00'	621.82'
8	850.00'	36°06'41"	277.10'	535.72'

LINE DATA

NO.	BEARING	DISTANCE
4	S 52°21'38" E	1790.83'
5	S 52°21'38" E	153.66'

PLAN

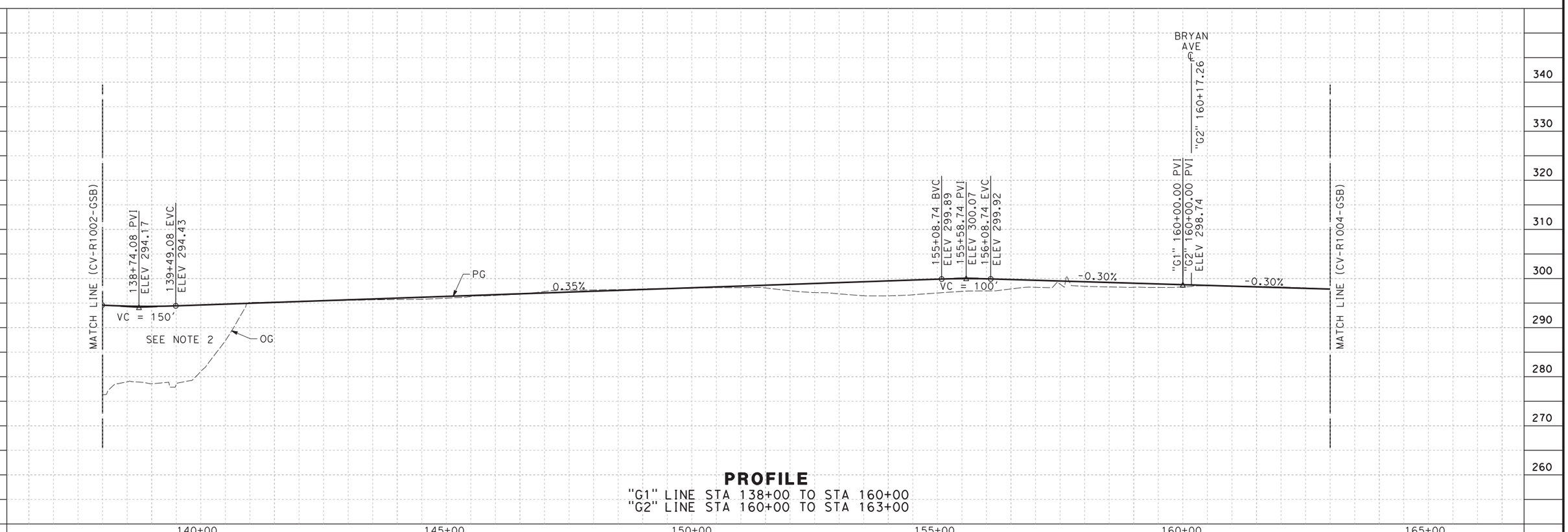

PROFILE

"G1" LINE STA 138+00 TO STA 160+00
"G2" LINE STA 160+00 TO STA 163+00

REV	DATE	BY	CHK	APP	DESCRIPTION

DESIGNED BY V. CHIO
DRAWN BY D. ELKINS
CHECKED BY L. HEUSTON
IN CHARGE F. NOBARI
DATE 11/22/11

PROPOSED PRELIMINARY DESIGN

NOT FOR CONSTRUCTION

AECOM Technical Services, Inc.
2020 L Street, Suite 300
Sacramento, CA 95811

CH2MHILL

CALIFORNIA HIGH-SPEED RAIL AUTHORITY

CALIFORNIA HIGH-SPEED TRAIN PROJECT
SIERRA SUBDIVISION
PACKAGE 1A
ROADWAY
PLAN AND PROFILE
GOLDEN STATE BOULEVARD

CONTRACT NO.
DRAWING NO. CV-R1003-GSB
SCALE AS SHOWN
SHEET NO.

lwebster 11/16/2011 5:56:19 PM CAHSRP-R1.TBL CHSR_half_black.plt C:\Documents and Settings\lwebster\My Documents\NDMProj\356751 - California High Speed Rail - SR99 Improvements\1S-CV-R1003-GSB.dgn

CURVE DATA

NO.	R	Δ	T	L
8	850.00′	36°06′41″	277.10′	535.72′
9	825.00′	77°39′53″	664.08′	1118.29′

LINE DATA

NO.	BEARING	DISTANCE
6	S 16°14′57″ E	459.80′
7	N 86°05′10″ E	194.51′

NOTES:

1. ROW SHOWN REPRESENTS THE MINIMUM ANTICIPATED ROW REQUIREMENTS. ACCURATE ROW AND ACCESS DATA WILL BE MADE AVAILABLE PRIOR TO AWARD.
2. SEE SHEET CV-R1012-GSB FOR VETERANS BLVD.
3. INFORMATION SHOWN IS BASED ON 15% DESIGN. DESIGN OF VETERANS BOULEVARD RAMP CONNECTION BETWEEN VETERANS AND GOLDEN STATE BOULEVARD, AND BULLARD AVENUE IS IN-PROGRESS AND SUBJECT TO REVISION BY THE CITY OF FRESNO.

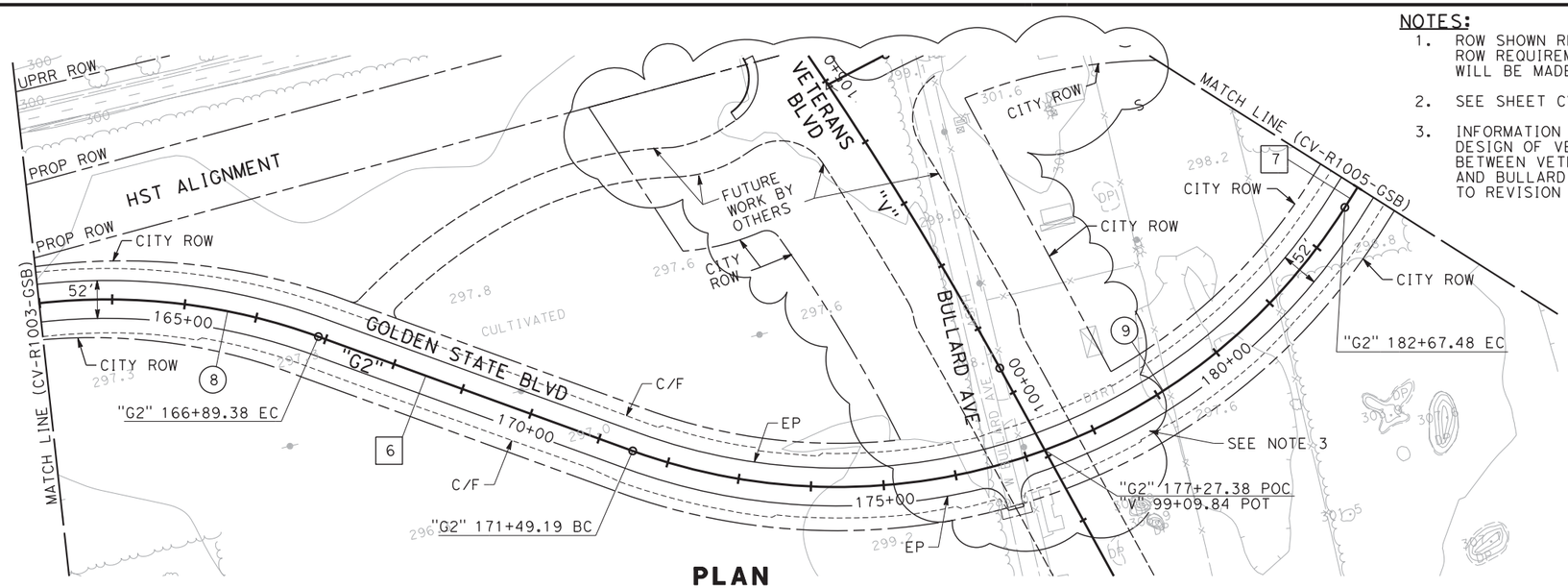

PLAN

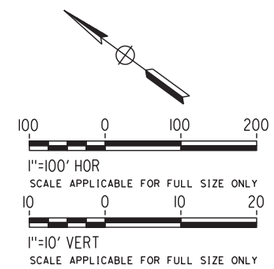

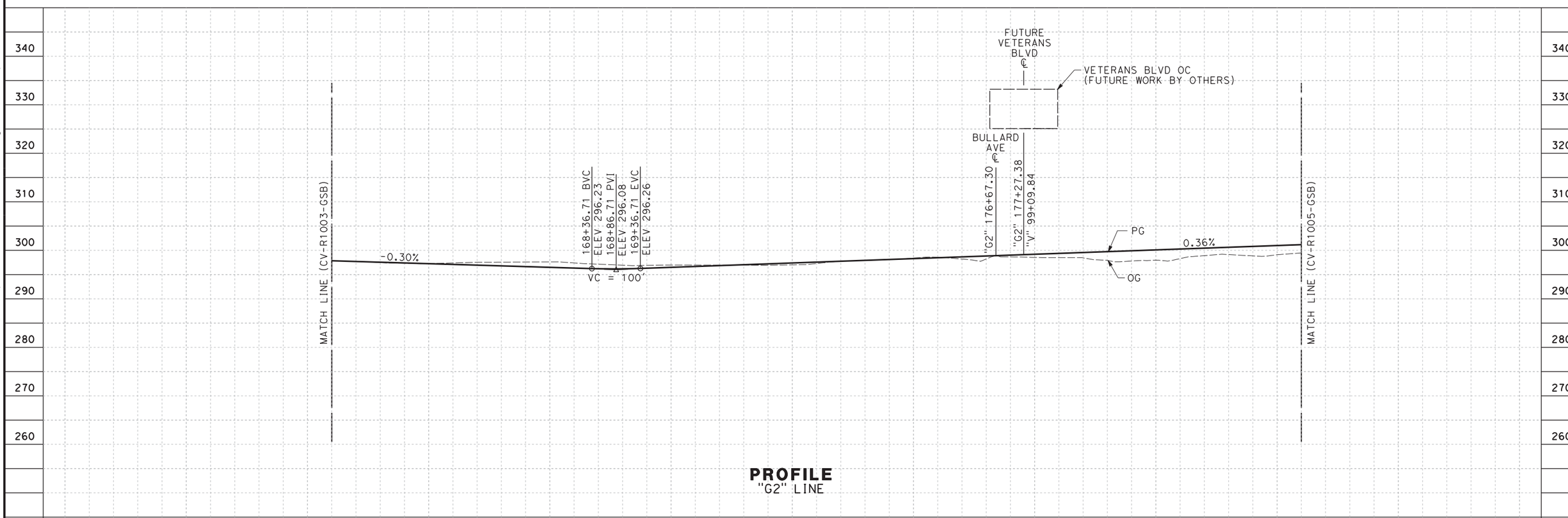

PROFILE
"G2" LINE

REV	DATE	BY	CHK	APP	DESCRIPTION

DESIGNED BY V. CHIO
DRAWN BY D. ELKINS
CHECKED BY L. HEUSTON
IN CHARGE F. NOBARI
DATE 11/22/11

PROPOSED PRELIMINARY DESIGN

NOT FOR CONSTRUCTION

AECOM Technical Services, Inc.
2020 L Street, Suite 300
Sacramento, CA 95811
CH2MHILL

CALIFORNIA HIGH-SPEED RAIL AUTHORITY

CALIFORNIA HIGH-SPEED TRAIN PROJECT
SIERRA SUBDIVISION
PACKAGE 1A
ROADWAY
PLAN AND PROFILE
GOLDEN STATE BOULEVARD

CONTRACT NO.
DRAWING NO. CV-R1004-GSB
SCALE AS SHOWN
SHEET NO.

lwebster 11/16/2016:00:39 PM CAHSRP-R1.TBL CHSR_half_black.plt C:\Documents and Settings\lwebster\My Documents\NDMProj\356751 - California High Speed Rail - SR99 Improvements\15-CV-R1004-GSB.dgn

CURVE DATA

NO.	R	Δ	T	L
10	850.00′	42°40′08"	331.99′	633.00′
11	815.40	51°50′07"	396.25′	737.69′

LINE DATA

NO.	BEARING	DISTANCE
7	N 86°05′10" E	194.51′
8	S 51°14′43" E	105.01′
9	S 63°44′00" E	89.29′
10	S 11°53′52" E	56.42′

RETAINING WALL DATA

NO.	LOCATIONS		LENGTH	MAX HEIGHT
	BEGIN	END		
1	22.00′ LT "VR" 10+83.26	22.00′ LT "VR" 15+83.39	500′	35′

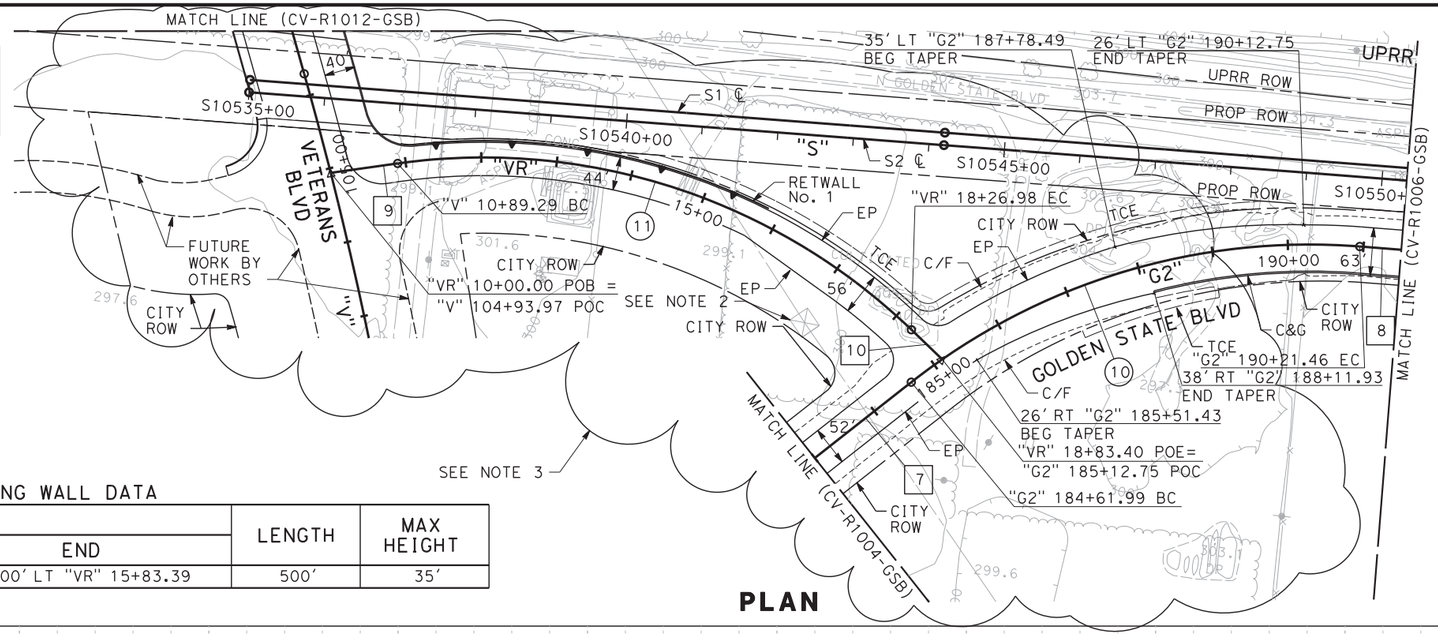

PLAN

NOTES:

1. ROW SHOWN REPRESENTS THE MINIMUM ANTICIPATED ROW REQUIREMENTS. ACCURATE ROW AND ACCESS DATA WILL BE MADE AVAILABLE PRIOR TO AWARD.
2. EXISTING TRANSMISSION TOWER TO BE PROTECTED IN PLACE.
3. INFORMATION SHOWN IS BASED ON 15% DESIGN. DESIGN OF VETERANS BOULEVARD RAMP CONNECTION BETWEEN VETERANS AND GOLDEN STATE BOULEVARD, AND BULLARD AVENUE IS IN-PROGRESS AND SUBJECT TO REVISION BY THE CITY OF FRESNO.

100 0 100 200
1"=100′ HOR
SCALE APPLICABLE FOR FULL SIZE ONLY

10 0 10 20
1"=10′ VERT
SCALE APPLICABLE FOR FULL SIZE ONLY

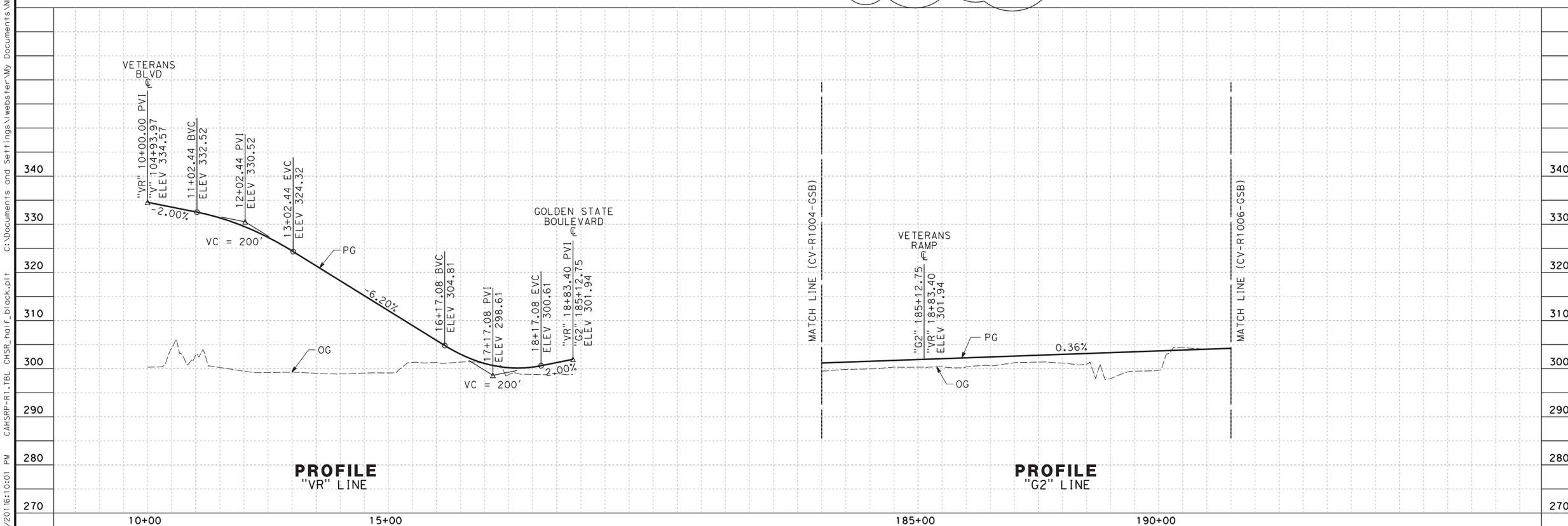

PROFILE
"VR" LINE

PROFILE
"G2" LINE

REV	DATE	BY	CHK	APP	DESCRIPTION

DESIGNED BY V. CHIO
DRAWN BY D. ELKINS
CHECKED BY L. HEUSTON
IN CHARGE F. NOBARI
DATE 11/22/11

PROPOSED PRELIMINARY DESIGN

NOT FOR CONSTRUCTION

AECOM Technical Services, Inc.
2020 L Street, Suite 300
Sacramento, CA 95811
CH2MHILL

CALIFORNIA HIGH-SPEED RAIL AUTHORITY

CALIFORNIA HIGH-SPEED TRAIN PROJECT
SIERRA SUBDIVISION
PACKAGE 1A
ROADWAY
PLAN AND PROFILE
GOLDEN STATE BOULEVARD

CONTRACT NO.
DRAWING NO. CV-R1005-GSB
SCALE AS SHOWN
SHEET NO.

lwebster 11/16/2016 10:01 PM CAHSRP-R1.TBL CHSR_half_black.plt C:\Documents and Settings\lwebster\My Documents\NDMProj\356751 - California High Speed Rail - SR99 Improvements\15-CV-R1005-GSB.dgn

CURVE DATA

NO.	R	Δ	T	L
12	25000.00'	01°19'05"	287.54'	575.06'

LINE DATA

NO.	BEARING	DISTANCE
8	S 51°14'43" E	105.01'
11	S 51°14'43" E	904.38'

LINE DATA

NO.	BEARING	DISTANCE
12	S 49°55'38" E	639.35'
13	S 49°25'38" E	2951.78'

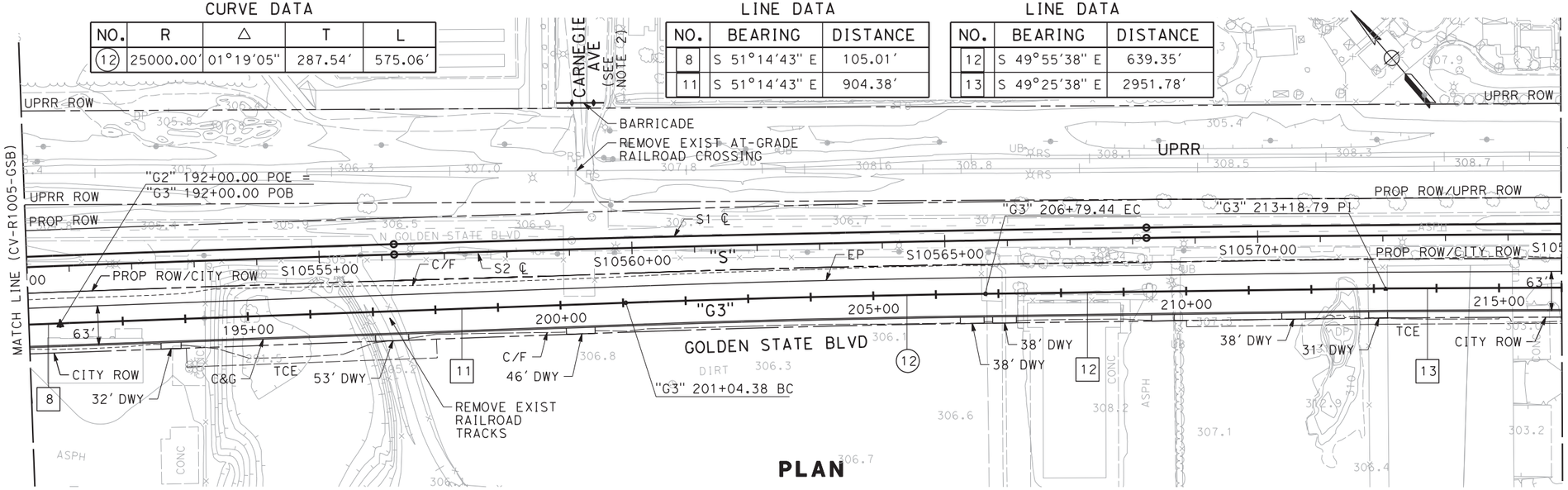

PLAN

NOTES:

1. ROW SHOWN REPRESENTS THE MINIMUM ANTICIPATED ROW REQUIREMENTS. ACCURATE ROW AND ACCESS DATA WILL BE MADE AVAILABLE PRIOR TO AWARD.
2. CARNEGIE AVENUE TO BE CLOSED FOR ACCESS WEST OF THE UNION PACIFIC PROPERTY LINE. SEE SPECIAL PROVISIONS FOR DETAIL REQUIREMENTS.

100 0 100 200
1"=100' HOR
SCALE APPLICABLE FOR FULL SIZE ONLY

10 0 10 20
1"=10' VERT
SCALE APPLICABLE FOR FULL SIZE ONLY

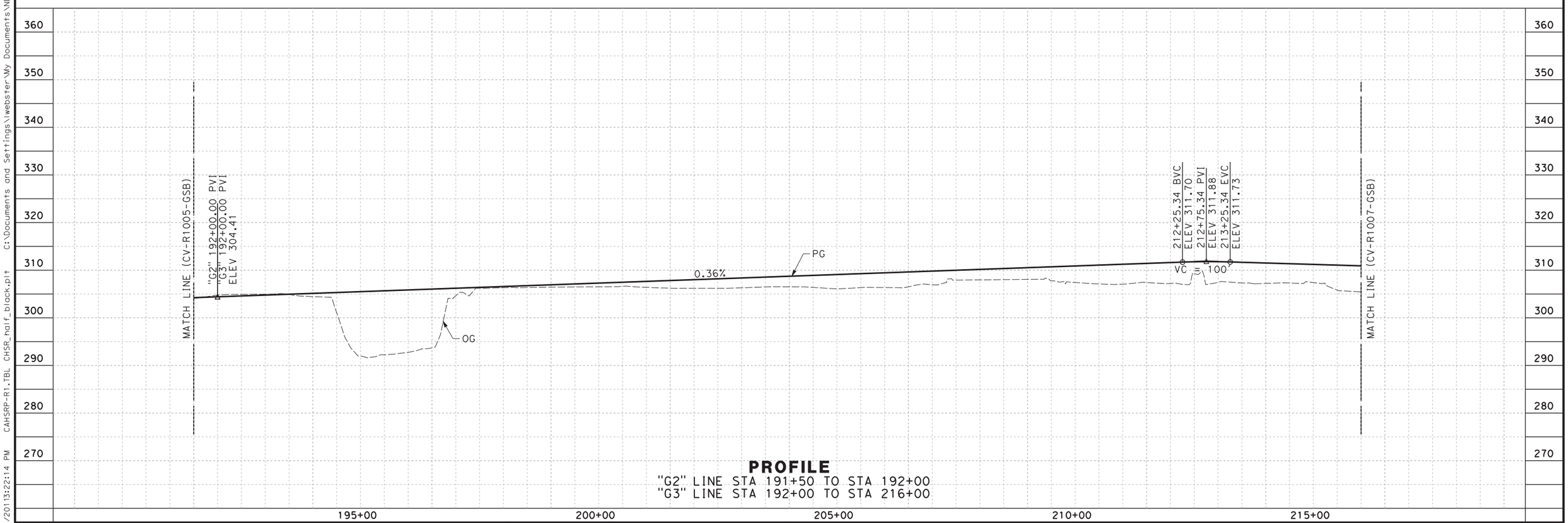

PROFILE
"G2" LINE STA 191+50 TO STA 192+00
"G3" LINE STA 192+00 TO STA 216+00

REV	DATE	BY	CHK	APP	DESCRIPTION

DESIGNED BY V. CHIO
DRAWN BY D. ELKINS
CHECKED BY L. HEUSTON
IN CHARGE F. NOBARI
DATE 11/22/11

PROPOSED PRELIMINARY DESIGN

NOT FOR CONSTRUCTION

AECOM Technical Services, Inc.
2020 L Street, Suite 300
Sacramento, CA 95811
CH2MHILL

CALIFORNIA HIGH-SPEED RAIL AUTHORITY

CALIFORNIA HIGH-SPEED TRAIN PROJECT
SIERRA SUBDIVISION
PACKAGE 1A
ROADWAY
PLAN AND PROFILE
GOLDEN STATE BOULEVARD

CONTRACT NO.
DRAWING NO. CV-R1006-GSB
SCALE AS SHOWN
SHEET NO.

lwebster 11/16/2011 3:22:14 PM CAHSRP-R1.TBL CHSR_half_black.plt C:\Documents and Settings\lwebster\My Documents\NDMProj\356751 - California High Speed Rail - SR99 Improvements\1S-CV-R1006-GSB.dgn

lwebster 11/17/2011 3:27:22 PM C:\Documents and Settings\lwebster\My Documents\NDMProj\356751 - California High Speed Rail - SR99 Improvements\1S-CV-R1007-GSB.dgn CAHSRP-R1.TBL CHSR_half_black.plt

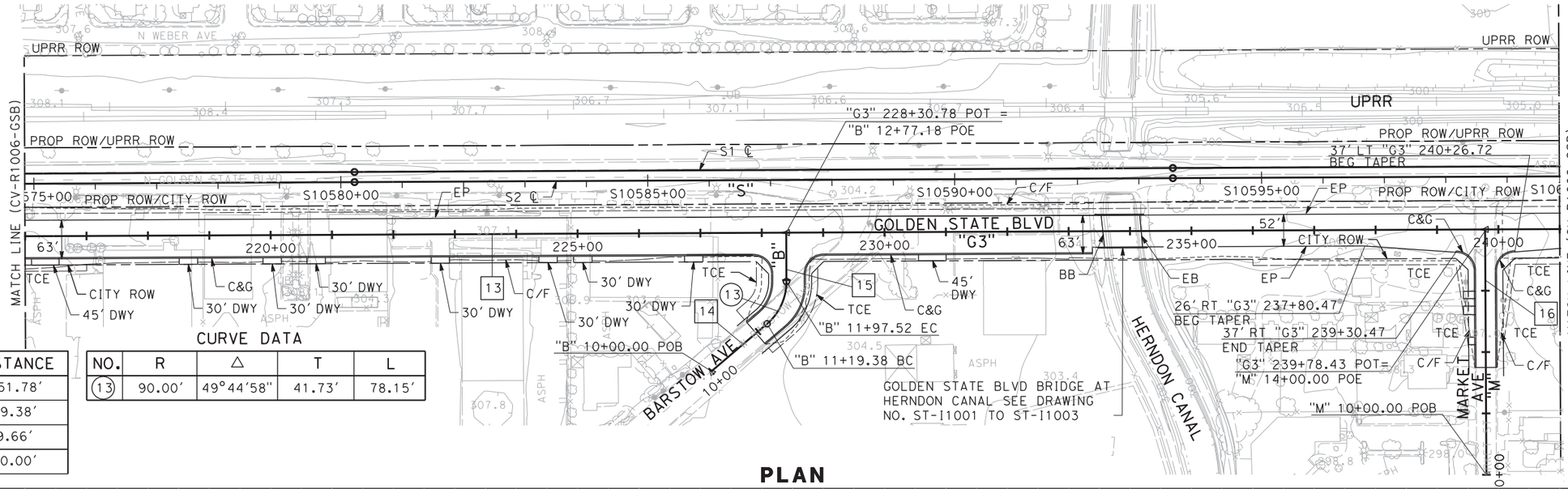

PLAN

LINE DATA

NO.	BEARING	DISTANCE
13	S 49°25'38" E	2951.78'
14	S 89°40'40" E	119.38'
15	N 40°34'22" E	79.66'
16	N 40°32'18" E	400.00'

CURVE DATA

NO.	R	Δ	T	L
13	90.00'	49°44'58"	41.73'	78.15'

NOTES:

1. ROW SHOWN REPRESENTS THE MINIMUM ANTICIPATED ROW REQUIREMENTS. ACCURATE ROW AND ACCESS DATA WILL BE MADE AVAILABLE PRIOR TO AWARD.

1"=100' HOR
SCALE APPLICABLE FOR FULL SIZE ONLY

1"=10' VERT
SCALE APPLICABLE FOR FULL SIZE ONLY

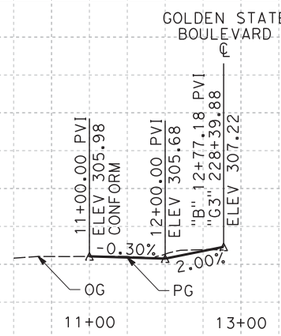

PROFILE "B" LINE

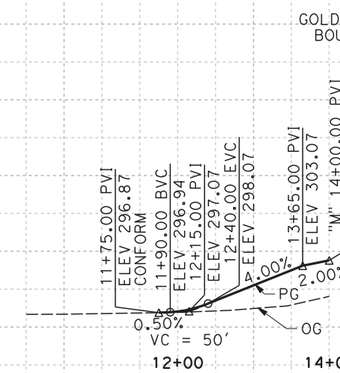

PROFILE "M" LINE

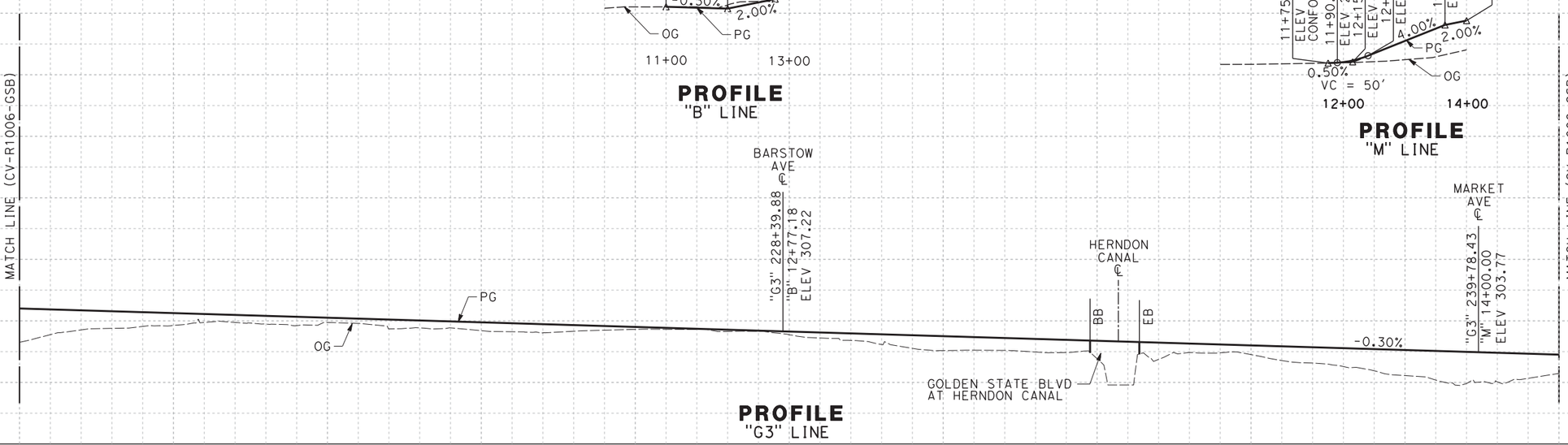

PROFILE "G3" LINE

REV	DATE	BY	CHK	APP	DESCRIPTION

DESIGNED BY V. CHIO
DRAWN BY D. ELKINS
CHECKED BY L. HEUSTON
IN CHARGE F. NOBARI
DATE 11/22/11

PROPOSED PRELIMINARY DESIGN

NOT FOR CONSTRUCTION

AECOM Technical Services, Inc.
2020 L Street, Suite 300
Sacramento, CA 95811
CH2MHILL

CALIFORNIA HIGH-SPEED RAIL AUTHORITY

CALIFORNIA HIGH-SPEED TRAIN PROJECT
SIERRA SUBDIVISION
PACKAGE 1A
ROADWAY
PLAN AND PROFILE
GOLDEN STATE BOULEVARD

CONTRACT NO.
DRAWING NO. CV-R1007-GSB
SCALE AS SHOWN
SHEET NO.

LINE DATA

NO.	BEARING	DISTANCE
13	S 49°25'38" E	2951.78'
17	N 41°19'21" E	200.00'

CURVE DATA

NO.	R	Δ	T	L
14	30000.00'	5°14'53"	1374.92'	2747.93'

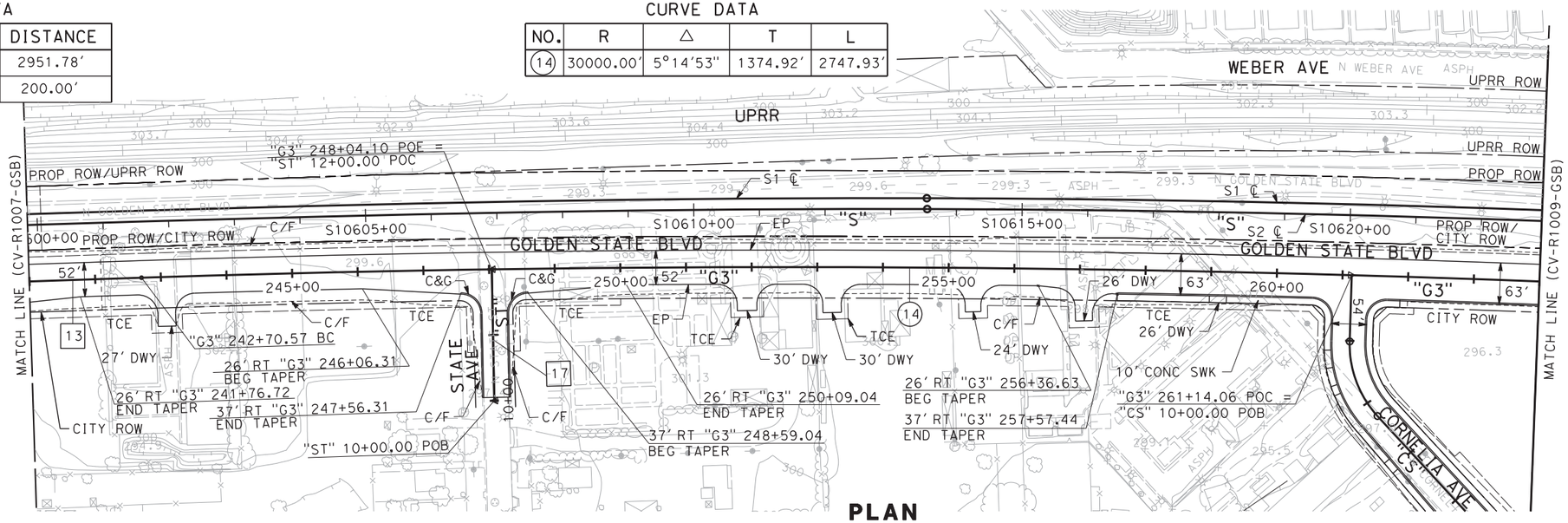

PLAN

NOTES:

1. ROW SHOWN REPRESENTS THE MINIMUM ANTICIPATED ROW REQUIREMENTS. ACCURATE ROW AND ACCESS DATA WILL BE MADE AVAILABLE PRIOR TO AWARD.
2. SEE SHEET CV-R1014 FOR SHAW AVENUE.
3. SEE SHEETS CV-R1015 AND CV-R1016 FOR CORNELIA AND SANTA ANA AVENUES.

100 0 100 200
1"=100' HOR
SCALE APPLICABLE FOR FULL SIZE ONLY

10 0 10 20
1"=10' VERT
SCALE APPLICABLE FOR FULL SIZE ONLY

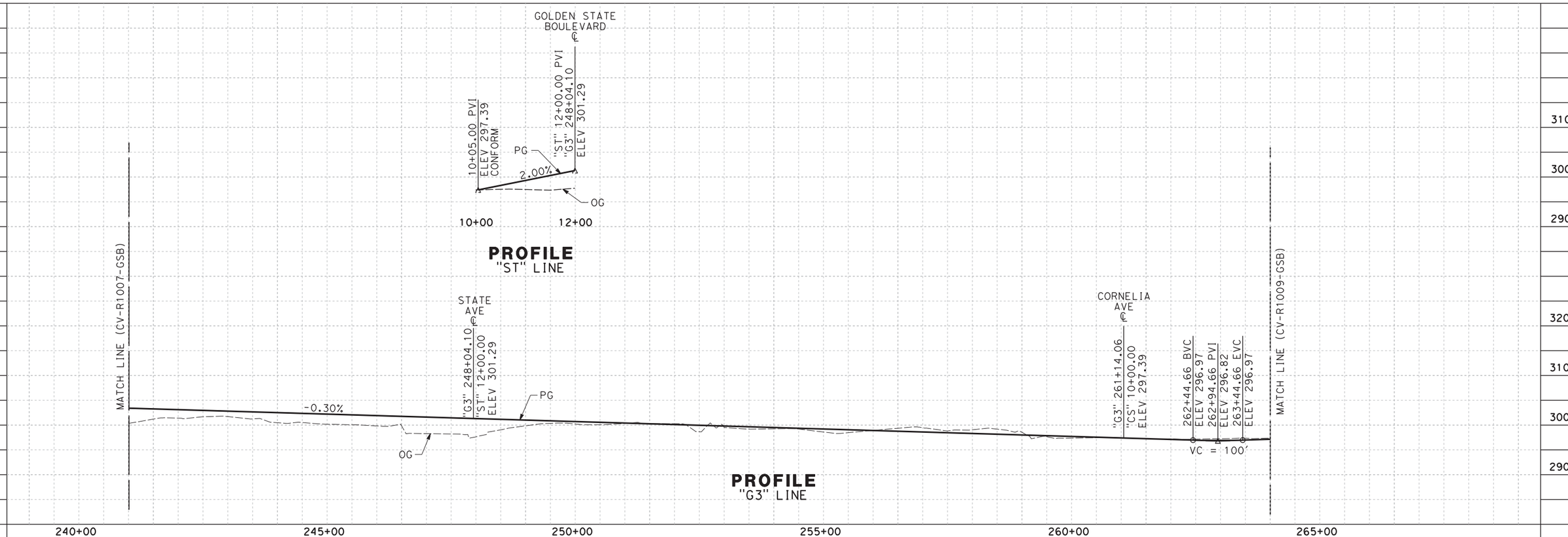

REV	DATE	BY	CHK	APP	DESCRIPTION

DESIGNED BY V. CHIO
DRAWN BY D. ELKINS
CHECKED BY L. HEUSTON
IN CHARGE F. NOBARI
DATE 11/22/11

PROPOSED PRELIMINARY DESIGN

NOT FOR CONSTRUCTION

AECOM Technical Services, Inc.
2020 L Street, Suite 300
Sacramento, CA 95811
CH2MHILL

CALIFORNIA HIGH-SPEED RAIL AUTHORITY

CALIFORNIA HIGH-SPEED TRAIN PROJECT
SIERRA SUBDIVISION
PACKAGE 1A
ROADWAY
PLAN AND PROFILE
GOLDEN STATE BOULEVARD

CONTRACT NO.
DRAWING NO. CV-R1008-GSB
SCALE AS SHOWN
SHEET NO.

lwebster 11/17/2011 3:30:48 PM CAHSRP-R1.TBL CHSR_half_black.plt C:\Documents and Settings\lwebster\My Documents\NDMProj\356751 - California High Speed Rail - SR99 Improvements\15-CV-R1008-GSB.dgn

CURVE DATA

NO.	R	Δ	T	L
14	30000.00′	5°14′53″	1374.92′	2747.93′
15	5000.00′	3°06′25″	135.60′	271.13′

LINE DATA

NO.	BEARING	DISTANCE
18	S 44°10′45″ E	352.72′
19	S 41°04′20″ E	5669.20′

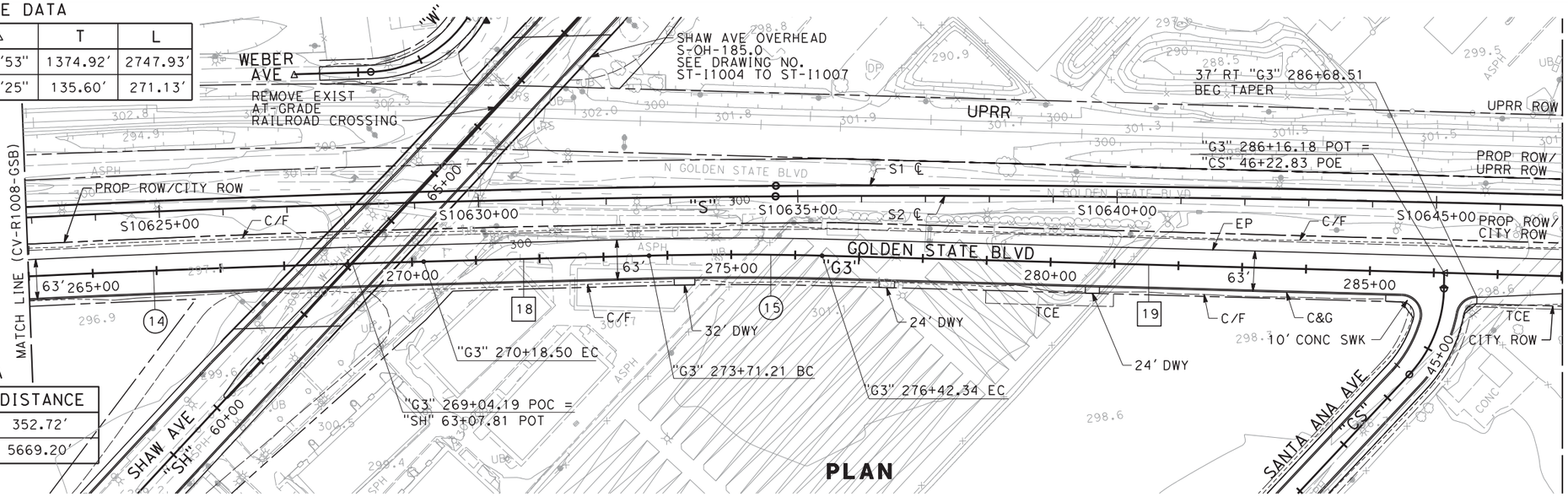

NOTES:

1. ROW SHOWN REPRESENTS THE MINIMUM ANTICIPATED ROW REQUIREMENTS. ACCURATE ROW AND ACCESS DATA WILL BE MADE AVAILABLE PRIOR TO AWARD.
2. SEE SHEETS CV-R1014-GSB & CV-R1015-GSB FOR SHAW AVENUE.
3. SEE SHEET CV-R1017-GSB FOR SANTA ANA AVENUES.

100 0 100 200
1"=100′ HOR
SCALE APPLICABLE FOR FULL SIZE ONLY

10 0 10 20
1"=10′ VERT
SCALE APPLICABLE FOR FULL SIZE ONLY

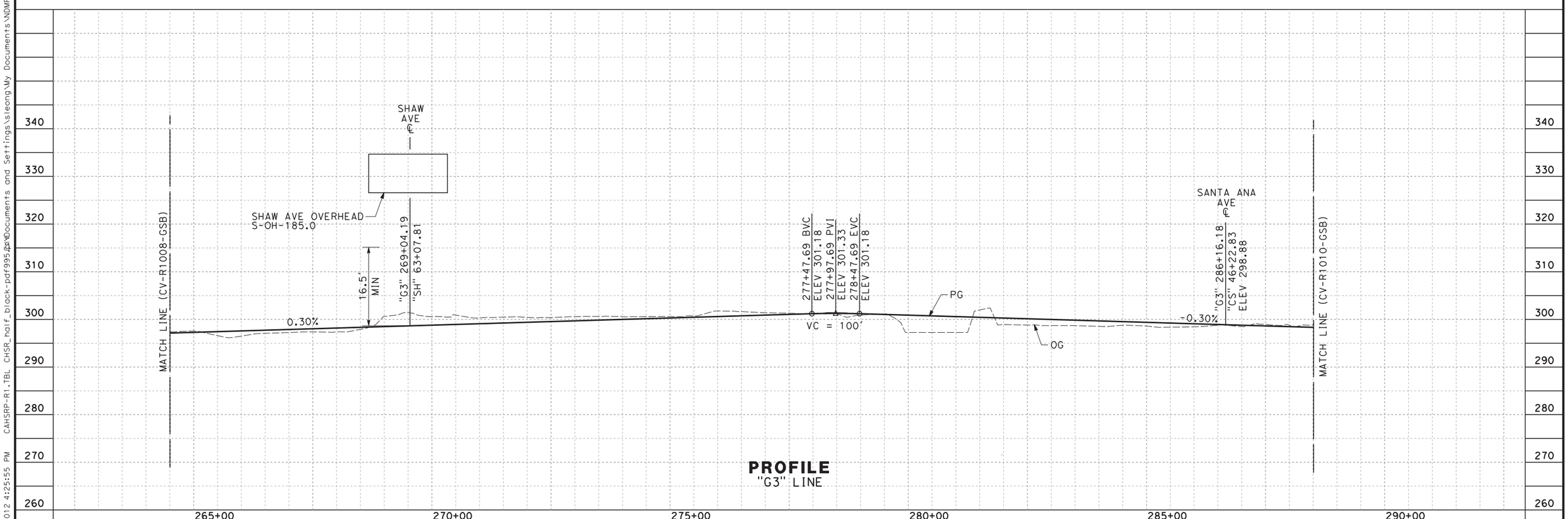

REV	DATE	BY	CHK	APP	DESCRIPTION

DESIGNED BY V. CHIO
DRAWN BY D. ELKINS
CHECKED BY L. HEUSTON
IN CHARGE F. NOBARI
DATE 2/17/12

PROPOSED PRELIMINARY DESIGN

NOT FOR CONSTRUCTION

AECOM Technical Services, Inc.
2020 L Street, Suite 300
Sacramento, CA 95811
CH2MHILL

CALIFORNIA HIGH-SPEED RAIL AUTHORITY

CALIFORNIA HIGH-SPEED TRAIN PROJECT
SIERRA SUBDIVISION
PACKAGE 1A
ROADWAY
PLAN AND PROFILE
GOLDEN STATE BOULEVARD

CONTRACT NO.
DRAWING NO. CV-R1009-GSB
SCALE AS SHOWN
SHEET NO.

sleong 2/15/2012 4:25:55 PM CAHSRP-R1.TBL CHSR_half_black-pdf995.pt N:\Documents and Settings\sleong\My Documents\NDMProj\356751 - California High Speed Rail - SR99 Improvements\1S-CV-R1009-GSB_REVISED.dgn

LINE DATA

NO.	BEARING	DISTANCE
19	S 41°04'20" E	5669.20'

NOTES:

1. ROW SHOWN REPRESENTS THE MINIMUM ANTICIPATED ROW REQUIREMENTS. ACCURATE ROW AND ACCESS DATA WILL BE MADE AVAILABLE PRIOR TO AWARD.

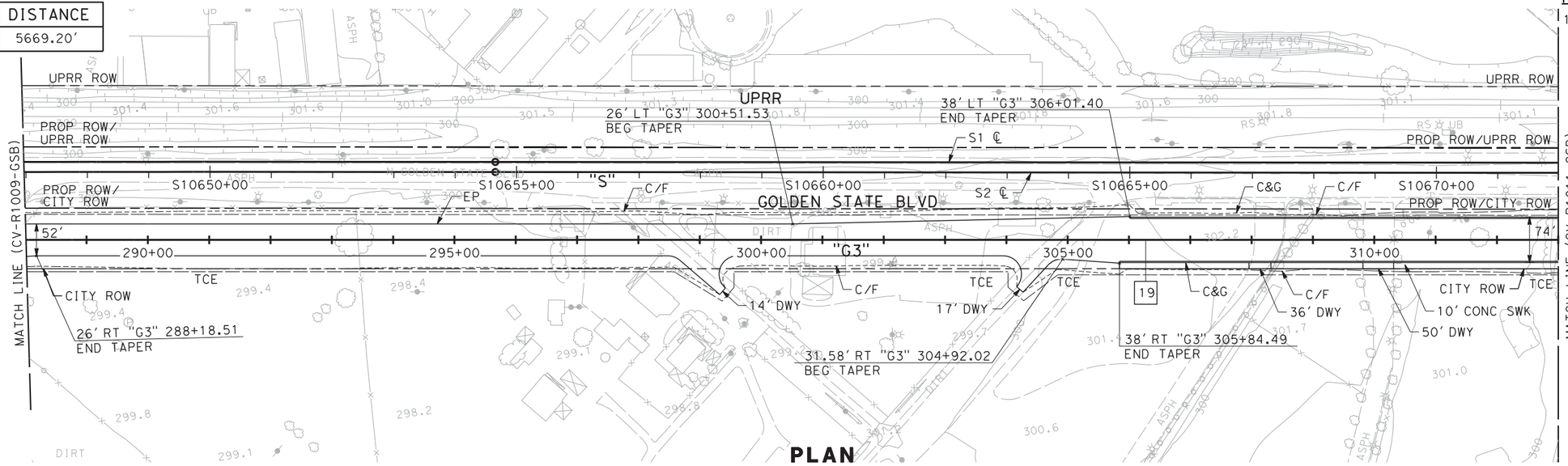

PLAN

100 0 100 200
1"=100' HOR
SCALE APPLICABLE FOR FULL SIZE ONLY

10 0 10 20
1"=10' VERT
SCALE APPLICABLE FOR FULL SIZE ONLY

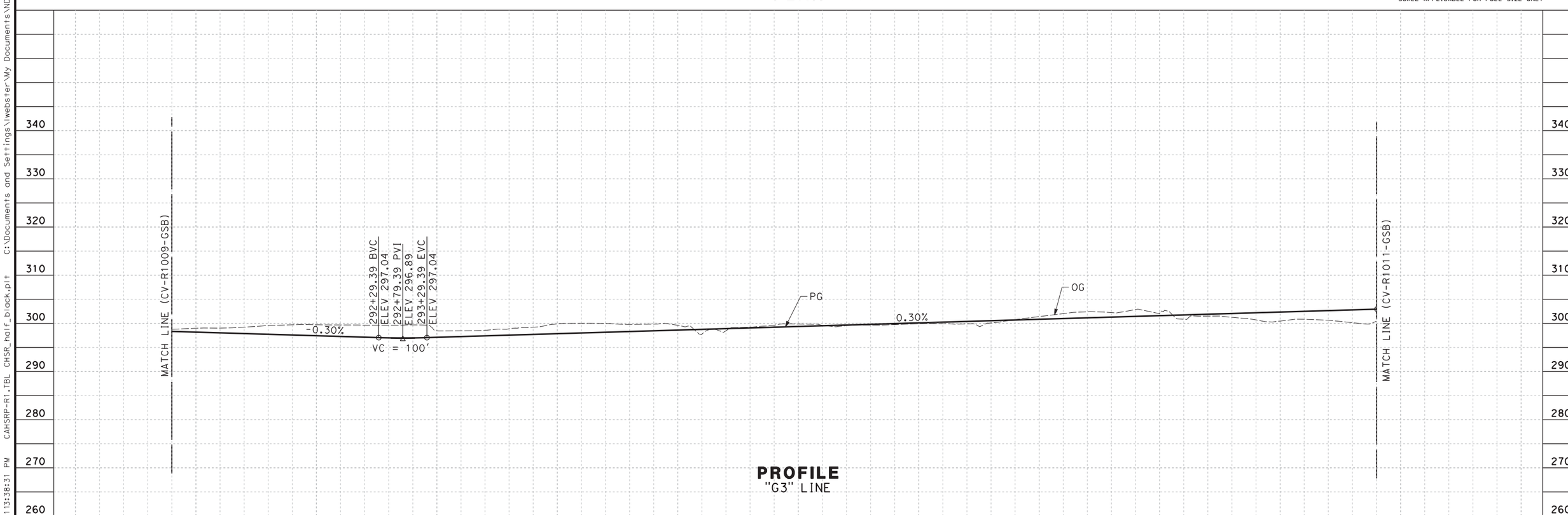

PROFILE
"G3" LINE

REV	DATE	BY	CHK	APP	DESCRIPTION

DESIGNED BY V. CHIO
DRAWN BY D. ELKINS
CHECKED BY L. HEUSTON
IN CHARGE F. NOBARI
DATE 11/22/11

PROPOSED PRELIMINARY DESIGN

NOT FOR CONSTRUCTION

AECOM Technical Services, Inc.
2020 L Street, Suite 300
Sacramento, CA 95811
CH2MHILL

CALIFORNIA HIGH-SPEED RAIL AUTHORITY

CALIFORNIA HIGH-SPEED TRAIN PROJECT
SIERRA SUBDIVISION
PACKAGE 1A
ROADWAY
PLAN AND PROFILE
GOLDEN STATE BOULEVARD

CONTRACT NO.
DRAWING NO. CV-R1010-GSB
SCALE AS SHOWN
SHEET NO.

lwebster 11/17/2011 3:38:31 PM CAHSRP-R1.TBL CHSR_half_black.plt C:\Documents and Settings\lwebster\My Documents\NDMProj\356751 - California High Speed Rail - SR99 Improvements\1S-CV-R1010-GSB.dgn

CURVE DATA				
NO.	R	Δ	T	L
16	600.00′	41°02′32"	224.58′	429.79′
17	200.00′	49°24′33"	92.01′	172.47′
18	1150.00′	10°25′31"	104.91′	209.25′

LINE DATA		
NO.	BEARING	DISTANCE
19	S 41°04′20" E	5669.20′
20	S 0°01′48" E	144.81′
21	N 89°32′57" E	61.55′

LINE DATA		
NO.	BEARING	DISTANCE
22	S 41°02′30" E	158.29′
23	S 51°28′01" E	204.33′
24	S 41°02′30" E	124.06′

NOTES:

1. ROW SHOWN REPRESENTS THE MINIMUM ANTICIPATED ROW REQUIREMENTS. ACCURATE ROW AND ACCESS DATA WILL BE MADE AVAILABLE PRIOR TO AWARD.
2. EXISTING PRIVATE BASIN TO BE RELOCATED PRIOR TO CONSTRUCTION. SEE SPECIAL PROVISIONS FOR DETAIL REQUIREMENTS.

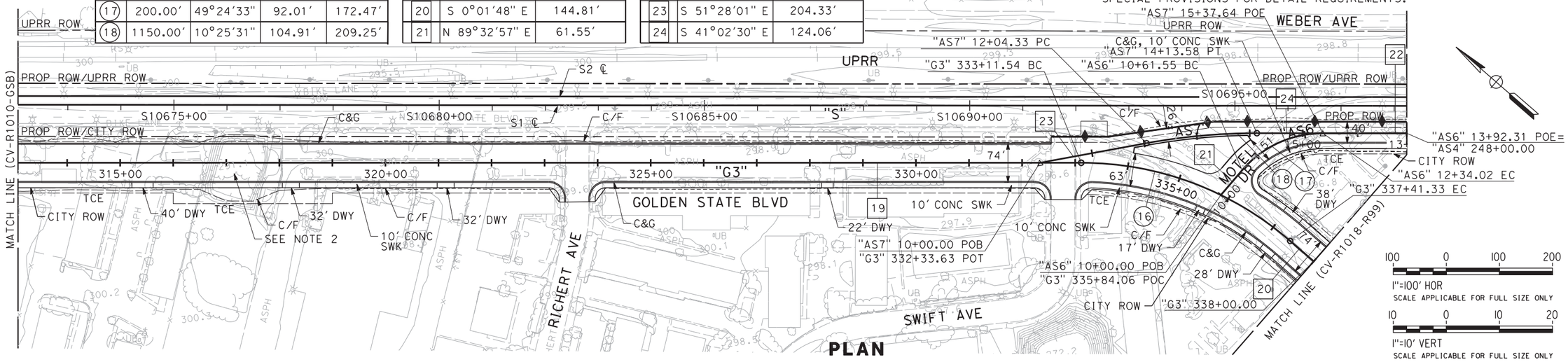

PLAN

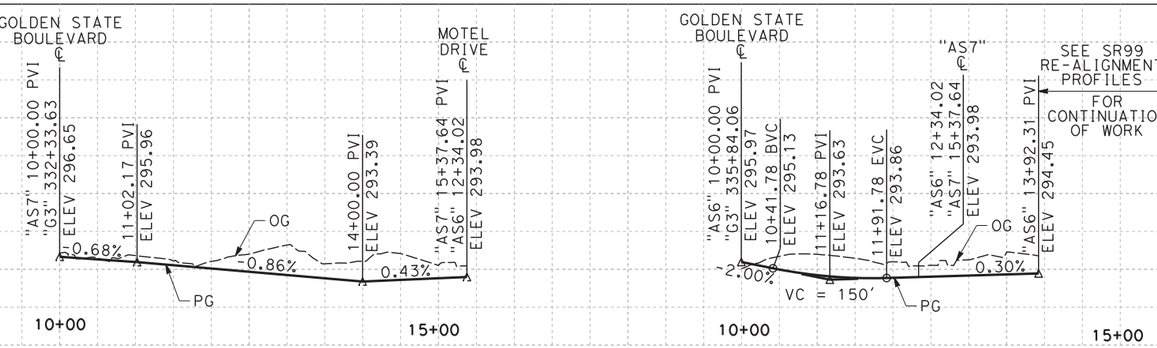

PROFILE
"AS7" LINE

PROFILE
"AS6" LINE

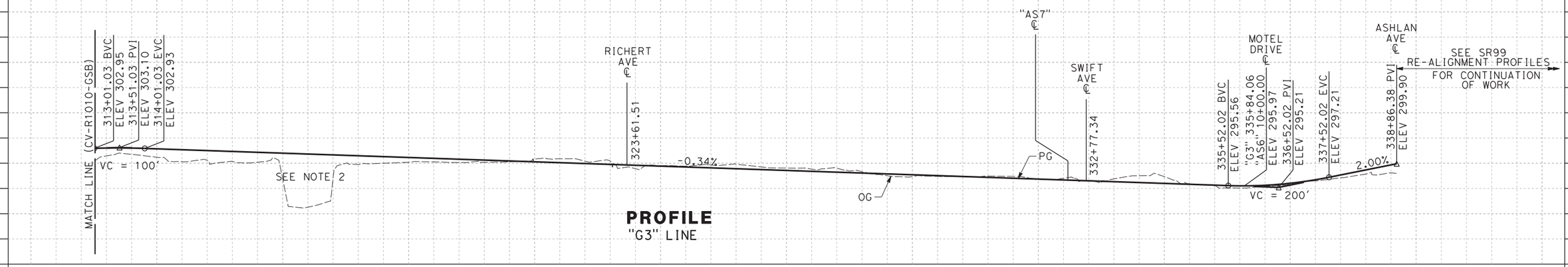

PROFILE
"G3" LINE

REV	DATE	BY	CHK	APP	DESCRIPTION

DESIGNED BY V. CHIO
DRAWN BY D. ELKINS
CHECKED BY L. HEUSTON
IN CHARGE F. NOBARI
DATE 11/22/11

PROPOSED PRELIMINARY DESIGN

NOT FOR CONSTRUCTION

AECOM Technical Services, Inc.
2020 L Street, Suite 300
Sacramento, CA 95811
CH2MHILL

CALIFORNIA HIGH-SPEED RAIL AUTHORITY

CALIFORNIA HIGH-SPEED TRAIN PROJECT
SIERRA SUBDIVISION
PACKAGE 1A
ROADWAY
PLAN AND PROFILE
GOLDEN STATE BOULEVARD

CONTRACT NO.
DRAWING NO. CV-R1011-GSB
SCALE AS SHOWN
SHEET NO.

lwebster 11/17/2011 3:40:33 PM CAHSRP-R1.TBL CHSR_half_black.plt C:\Documents and Settings\lwebster\My Documents\NDMProj\356751 - California High Speed Rail - SR99 Improvements\15-CV-R1011-GSB.dgn

CURVE DATA

NO.	R	Δ	T	L
19	5200.00′	06°30′41″	295.80′	590.95′

LINE DATA

NO.	BEARING	DISTANCE
25	N 25°02′05″ E	238.32′
26	N 18°31′24″ E	1870.73′

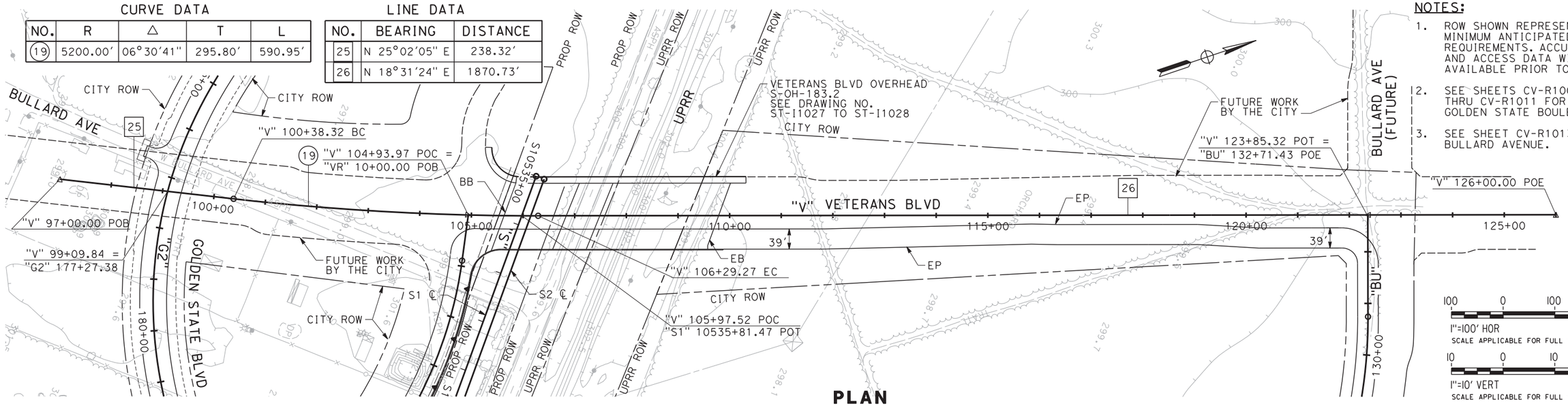

NOTES:

1. ROW SHOWN REPRESENTS THE MINIMUM ANTICIPATED ROW REQUIREMENTS. ACCURATE ROW AND ACCESS DATA WILL BE MADE AVAILABLE PRIOR TO AWARD.
2. SEE SHEETS CV-R1001 THRU CV-R1011 FOR GOLDEN STATE BOULEVARD.
3. SEE SHEET CV-R1013 FOR BULLARD AVENUE.

PLAN

INFORMATION SHOWN ON THIS SHEET IS BASED ON 15% DESIGN. DESIGN IS IN-PROGRESS AND SUBJECT TO REVISIONS BY THE CITY OF FRESNO.

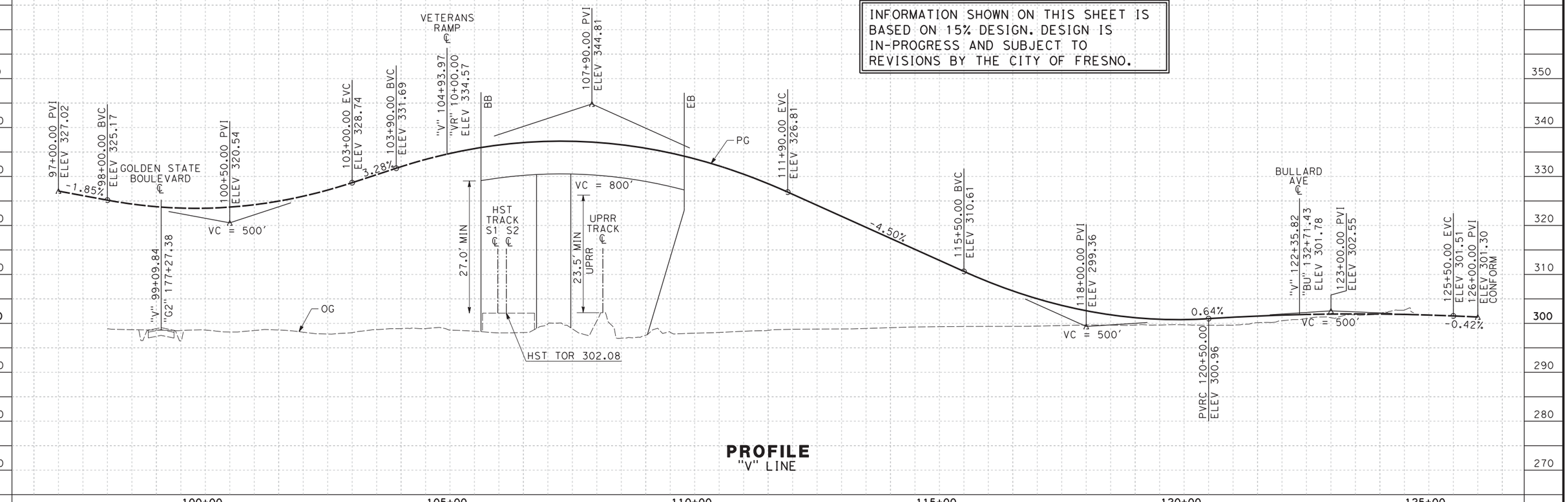

PROFILE
"V" LINE

REV	DATE	BY	CHK	APP	DESCRIPTION

DESIGNED BY V. CHIO
DRAWN BY D. ELKINS
CHECKED BY L. HEUSTON
IN CHARGE F. NOBARI
DATE 11/22/11

PROPOSED PRELIMINARY DESIGN

NOT FOR CONSTRUCTION

AECOM Technical Services, Inc.
2020 L Street, Suite 300
Sacramento, CA 95811
CH2MHILL

CALIFORNIA HIGH-SPEED RAIL AUTHORITY

CALIFORNIA HIGH-SPEED TRAIN PROJECT
SIERRA SUBDIVISION
PACKAGE 1A
ROADWAY
PLAN AND PROFILE
VETERANS BOULEVARD

CONTRACT NO.
DRAWING NO. CV-R1012-GSB
SCALE AS SHOWN
SHEET NO.

lwebster 11/17/2011 3:42:32 PM CAHSRP-R1.TBL CHSR_half_black.plt C:\Documents and Settings\lwebster\My Documents\NDMProj\356751 - California High Speed Rail - SR99 Improvements\15-CV-R1012-GSB.dgn

CURVE DATA

NO.	R	Δ	T	L
20	1000.00′	44°44′13″	411.53′	780.81′
21	1200.00′	25°53′30	275.85′	542.27′
22	975.00′	44°08′47″	395.38′	751.24′

LINE DATA

NO.	BEARING	DISTANCE
27	N 71°31′07″ W	197.11′

NOTES:

1. ROW SHOWN REPRESENTS THE MINIMUM ANTICIPATED ROW REQUIREMENTS. ACCURATE ROW AND ACCESS DATA WILL BE MADE AVAILABLE PRIOR TO AWARD.
2. SEE SHEET R1012-GSB FOR VETERANS BOULEVARD.

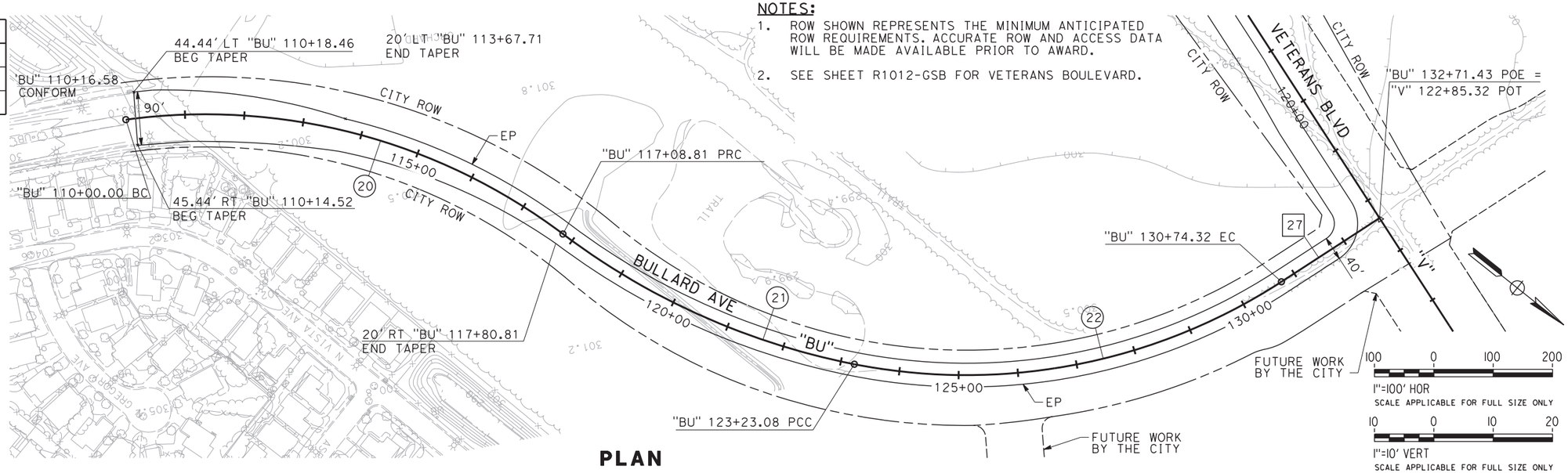

PLAN

INFORMATION SHOWN ON THIS SHEET IS BASED ON 15% DESIGN. DESIGN IS IN-PROGRESS AND SUBJECT TO REVISIONS BY THE CITY OF FRESNO.

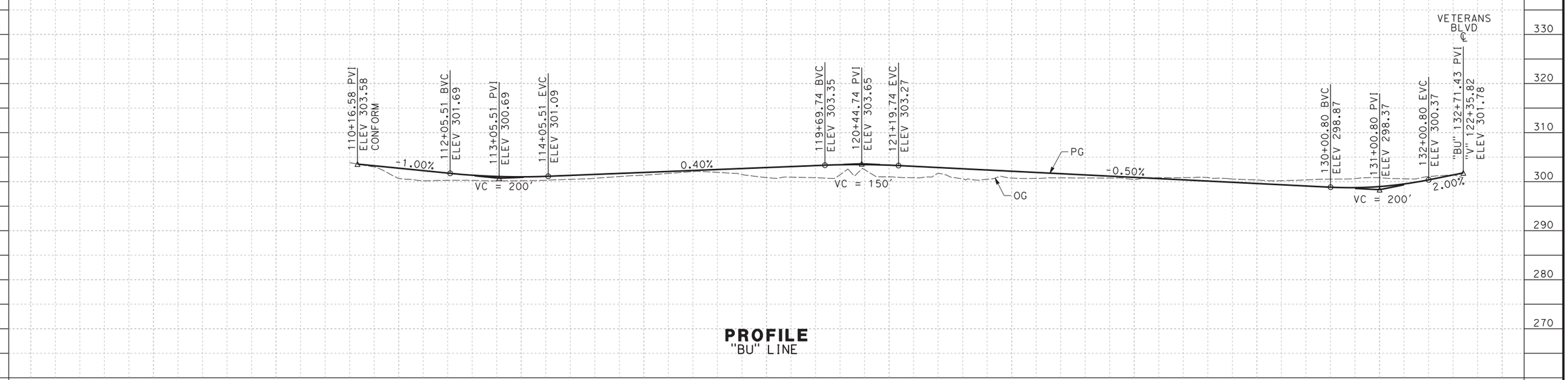

PROFILE
"BU" LINE

REV	DATE	BY	CHK	APP	DESCRIPTION

DESIGNED BY V. CHIO
DRAWN BY D. ELKINS
CHECKED BY L. HEUSTON
IN CHARGE F. NOBARI
DATE 11/22/11

PROPOSED PRELIMINARY DESIGN

NOT FOR CONSTRUCTION

AECOM Technical Services, Inc.
2020 L Street, Suite 300
Sacramento, CA 95811
CH2MHILL

CALIFORNIA HIGH-SPEED RAIL AUTHORITY

CALIFORNIA HIGH-SPEED TRAIN PROJECT
SIERRA SUBDIVISION
PACKAGE 1A
ROADWAY
PLAN AND PROFILE
BULLARD AVENUE

CONTRACT NO.
DRAWING NO. CV-R1013-GSB
SCALE AS SHOWN
SHEET NO.

lwebster 11/17/2011 3:44:44 PM CAHSRP-R1.TBL CHSR_half_black.plt C:\Documents and Settings\lwebster\My Documents\NDMProj\356751 - California High Speed Rail - SR99 Improvements\15-CV-R1013-GSB.dgn

LINE DATA

NO.	BEARING	DISTANCE
28	N 89°17'00" E	627.41'
29	N 89°47'18" E	2553.12'
35	S 44°47'18" E	120.00'
36	N 38°46'24" E	100.00'

CURVE DATA

NO.	R	Δ	T	L
27	188.75'	96°42'09"	212.23'	318.57'

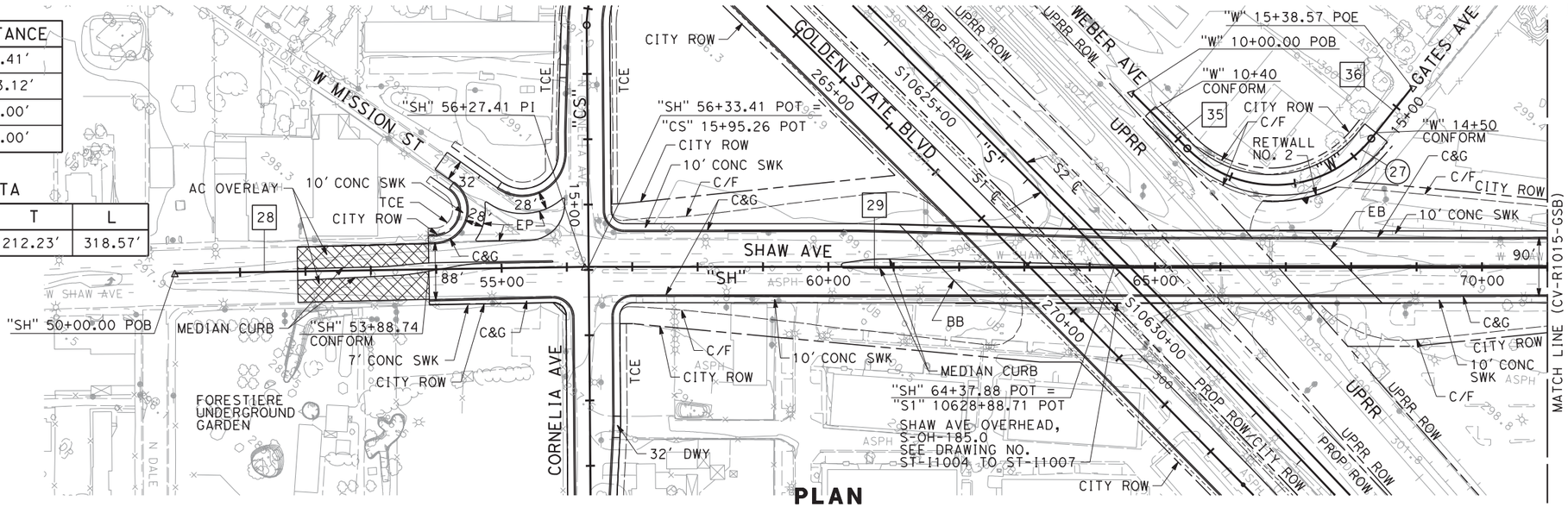

PLAN

NOTES:

1. ROW SHOWN REPRESENTS THE MINIMUM ANTICIPATED ROW REQUIREMENTS. ACCURATE ROW AND ACCESS DATA WILL BE MADE AVAILABLE PRIOR TO AWARD.
2. SEE SHEETS CV-R1001-GSB THRU CV-R1011-GSB FOR GOLDEN STATE BLVD.
3. SEE SHEET CV-R1016-GSB FOR CORNELIA AVENUE.
4. CONSTRUCT SIDEWALK RAMPS AND LANDING IN ACCORDANCE WITH REQUIREMENTS PER "2010 ADA STANDARDS FOR ACCESSIBLE DESIGN".

100 0 100 200
1"=100' HOR
SCALE APPLICABLE FOR FULL SIZE ONLY

10 0 10 20
1"=10' VERT
SCALE APPLICABLE FOR FULL SIZE ONLY

RETAINING WALL DATA

NO.	LOCATIONS BEGIN	LOCATIONS END	LENGTH	MAX HEIGHT
2	25.00' RT "WG" 12+45.00	25.00' RT "WG" 13+70.00	140'	15'

TABLE 1

NO.	STA	LT SWK ELEV	RT SWK ELEV
1	58+00.00	304.18	304.40
2	58+05.00	304.29	304.51
3	58+41.76	306.79	307.01
4	58+83.53	309.29	309.51
5	59+25.29	311.79	312.01
6	59+67.06	314.29	314.51
7	60+08.82	316.79	317.01
8	60+50.59	319.29	319.51
9	60+92.35	321.79	322.01
10	61+34.12	324.29	324.51
11	61+75.88	326.79	327.01
12	62+17.65	329.29	329.51
13	62+59.41	331.79	332.01
14	62+95.09	333.76	333.85
15	63+00.09	333.76	333.85

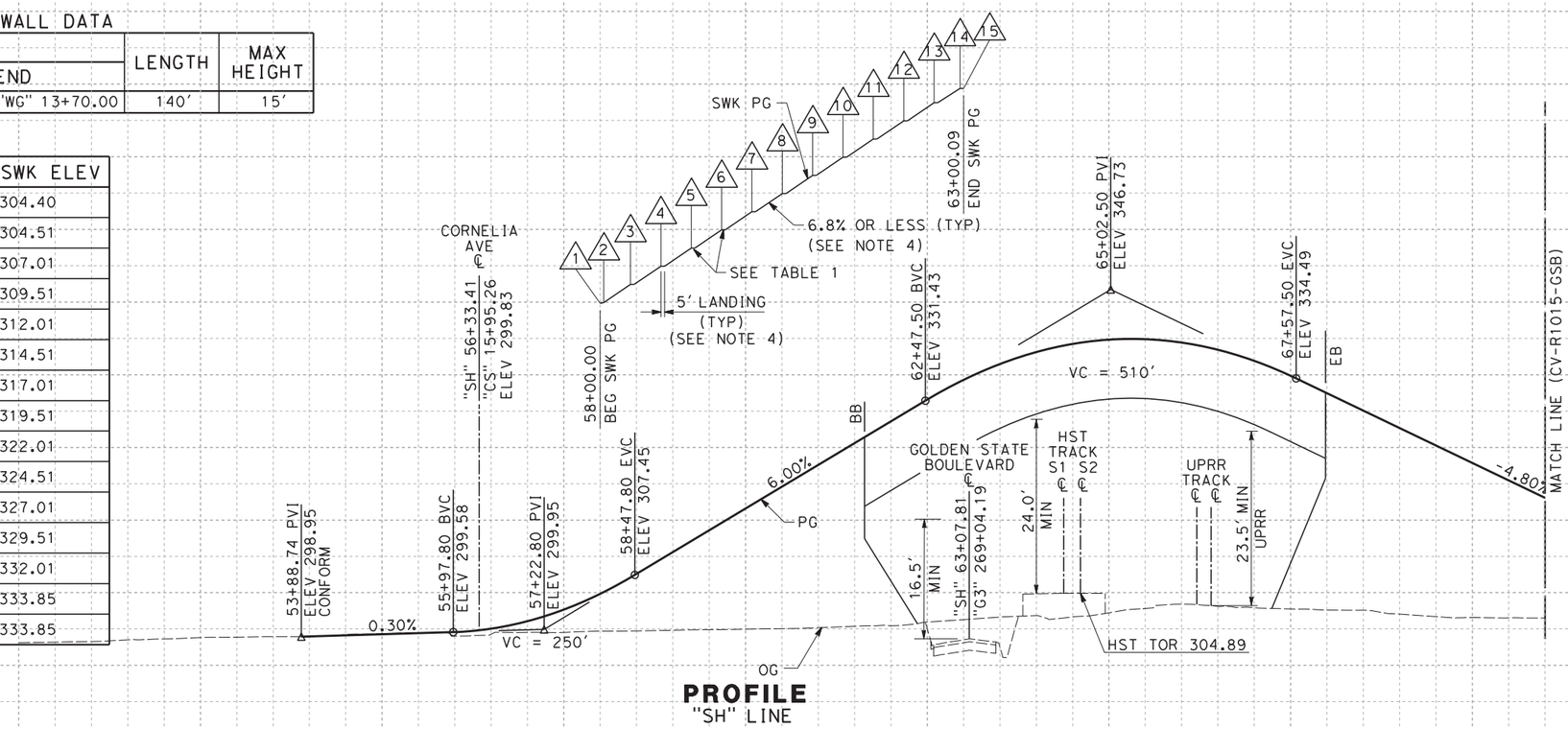

PROFILE
"SH" LINE

REV	DATE	BY	CHK	APP	DESCRIPTION

DESIGNED BY V. CHIO
DRAWN BY D. ELKINS
CHECKED BY L. HEUSTON
IN CHARGE F. NOBARI
DATE 2/17/12

PROPOSED PRELIMINARY DESIGN
NOT FOR CONSTRUCTION

AECOM Technical Services, Inc.
2020 L Street, Suite 300 Sacramento, CA 95811
CH2MHILL

CALIFORNIA HIGH-SPEED RAIL AUTHORITY

CALIFORNIA HIGH-SPEED TRAIN PROJECT
SIERRA SUBDIVISION
PACKAGE 1A
ROADWAY
PLAN AND PROFILE
SHAW AVENUE

CONTRACT NO.
DRAWING NO. CV-R1014-GSB
SCALE AS SHOWN
SHEET NO.

sleong 2/17/2012 9:34:43 AM CAHSRP-R1.TBL CHSR_half_black-pdf995.pc3 C:\Documents and Settings\sleong\My Documents\NDMProj\356751 - California High Speed Rail - SR99 Improvements\1S-CV-R1014-GSB_REVISED.dwg

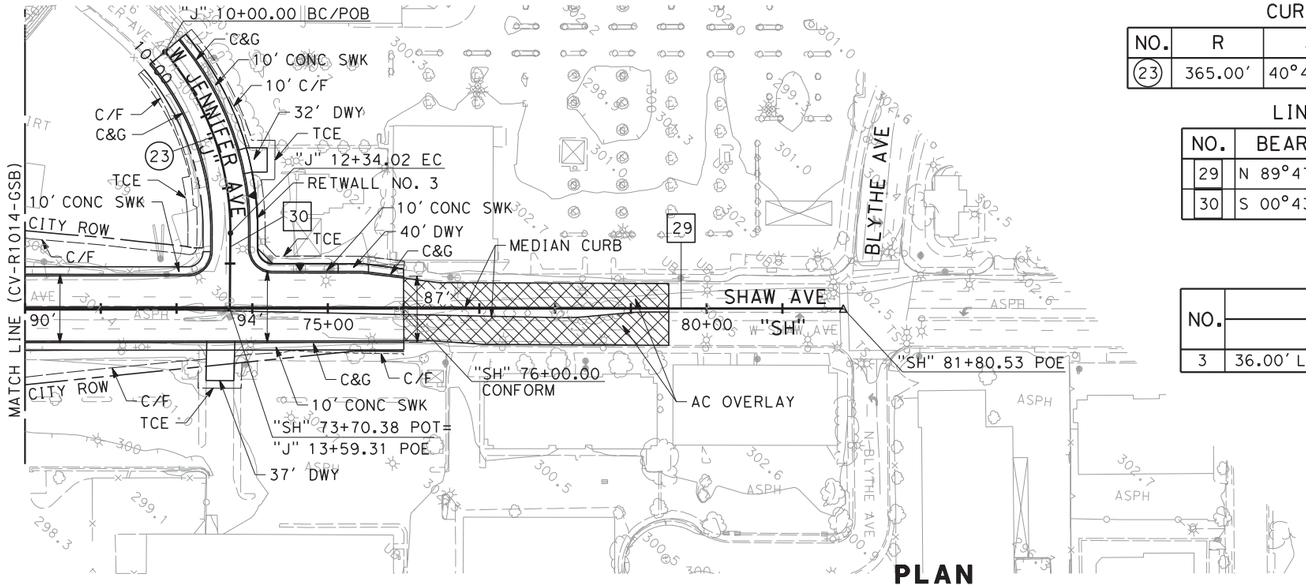

PLAN

CURVE DATA

NO.	R	Δ	T	L
23	365.00'	40°47'18"	135.70'	259.84'

LINE DATA

NO.	BEARING	DISTANCE
29	N 89°47'18" E	2553.12'
30	S 00°43'44" W	99.47'

RETAINING WALL DATA

NO.	LOCATIONS		LENGTH	MAX HEIGHT
	BEGIN	END		
3	36.00' LT "J" 11+86.00	59.00' LT "SH" 75+13.40'	220'	2'

NOTES:

1. ROW SHOWN REPRESENTS THE MINIMUM ANTICIPATED ROW REQUIREMENTS. ACCURATE ROW AND ACCESS DATA WILL BE MADE AVAILABLE PRIOR TO AWARD.
2. SEE SHEETS CV-R1001-GSB THRU CV-R1011-GSB FOR GOLDEN STATE BLVD.
3. SEE SHEET CV-R1016-GSB FOR CORNELIA AVENUE.

100 0 100 200
1"=100' HOR
SCALE APPLICABLE FOR FULL SIZE ONLY

10 0 10 20
1"=10' VERT
SCALE APPLICABLE FOR FULL SIZE ONLY

PROFILE
"SH" LINE

PROFILE
"J" LINE

REV	DATE	BY	CHK	APP	DESCRIPTION

DESIGNED BY V. CHIO
DRAWN BY D. ELKINS
CHECKED BY L. HEUSTON
IN CHARGE F. NOBARI
DATE 2/17/12

PROPOSED PRELIMINARY DESIGN

NOT FOR CONSTRUCTION

AECOM Technical Services, Inc.
2020 L Street, Suite 300
Sacramento, CA 95811
CH2MHILL

CALIFORNIA HIGH-SPEED RAIL AUTHORITY

CALIFORNIA HIGH-SPEED TRAIN PROJECT
SIERRA SUBDIVISION
PACKAGE 1A
ROADWAY
PLAN AND PROFILE
SHAW AVENUE

CONTRACT NO.
DRAWING NO. CV-R1015-GSB
SCALE AS SHOWN
SHEET NO.

sleong 2/15/2012 5:30:58 PM CAHSRP-R1.TBL CHSR_half_black-pdf995.pc3 C:\Documents and Settings\sleong\My Documents\NDMProj\356751 - California High Speed Rail - SR99 Improvements\1S-CV-R1015-GSB_REVISED.dgn

CURVE DATA

NO.	R	Δ	T	L
24	160.00′	44°29′15"	65.44′	124.23′

LINE DATA

NO.	BEARING	DISTANCE
31	S 44°14′32" E	100.95′
32	S 0°14′44" E	1378.77′

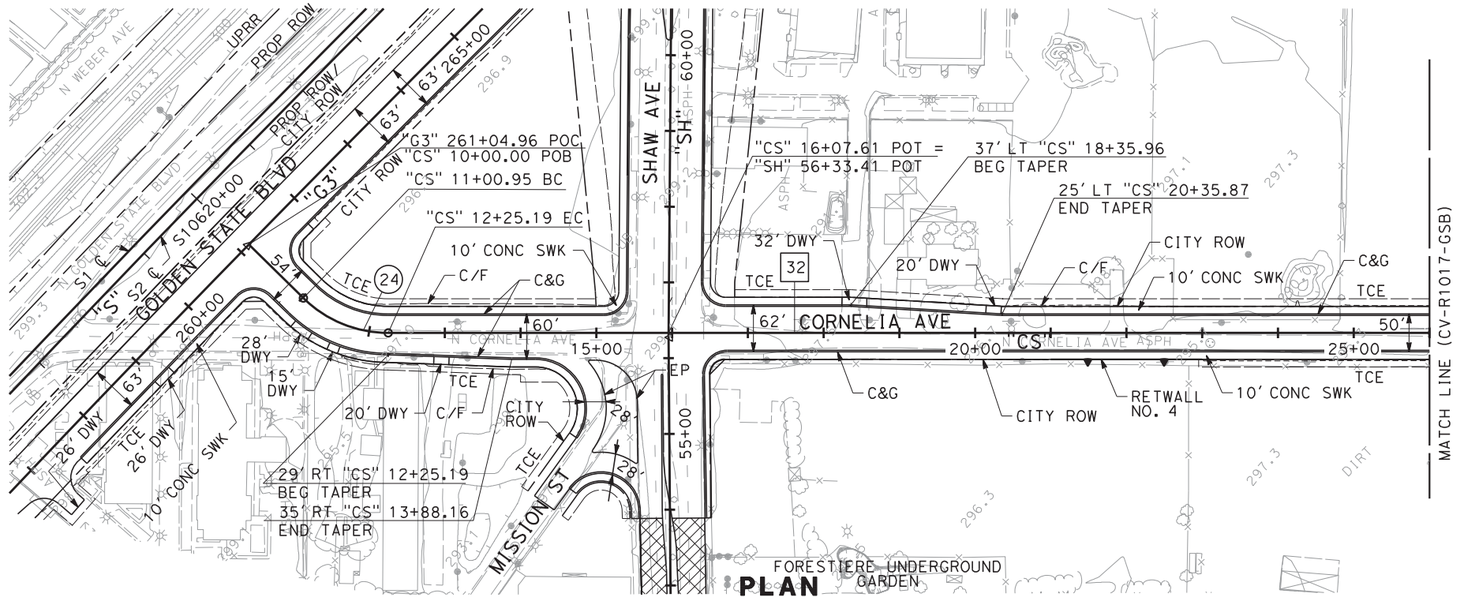

PLAN

NOTES:

1. ROW SHOWN REPRESENTS THE MINIMUM ANTICIPATED ROW REQUIREMENTS. ACCURATE ROW AND ACCESS DATA WILL BE MADE AVAILABLE PRIOR TO AWARD.
2. SEE SHEETS CV-R1001-GSB THRU CV-R1011-GSB FOR GOLDEN STATE BLVD.
3. SEE SHEETS CV-R1014-GSB AND CV-R1015-GSB FOR SHAW AVENUE.

100 0 100 200
1"=100′ HOR
SCALE APPLICABLE FOR FULL SIZE ONLY

10 0 10 20
1"=10′ VERT
SCALE APPLICABLE FOR FULL SIZE ONLY

RETAINING WALL DATA

NO.	LOCATIONS BEGIN	LOCATIONS END	LENGTH	MAX HEIGHT
4	35.00′ RT "CS" 20+90.00	35.00′ RT "CS" 23+00.00	210′	2′

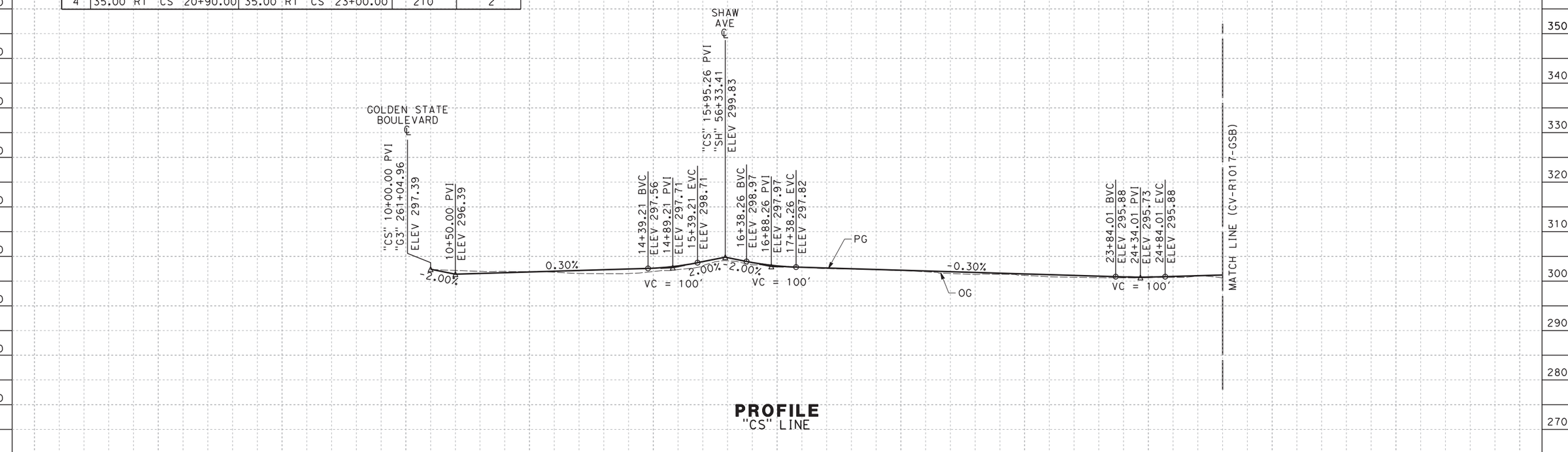

PROFILE
"CS" LINE

REV	DATE	BY	CHK	APP	DESCRIPTION

DESIGNED BY V. CHIO
DRAWN BY D. ELKINS
CHECKED BY L. HEUSTON
IN CHARGE F. NOBARI
DATE 2/17/12

PROPOSED PRELIMINARY DESIGN
NOT FOR CONSTRUCTION

AECOM Technical Services, Inc.
2020 L Street, Suite 300
Sacramento, CA 95811
CH2MHILL

CALIFORNIA HIGH-SPEED RAIL AUTHORITY

CALIFORNIA HIGH-SPEED TRAIN PROJECT
SIERRA SUBDIVISION
PACKAGE 1A
ROADWAY
PLAN AND PROFILE
CORNELIA AVENUE/SANTA ANA AVENUE

CONTRACT NO.
DRAWING NO. CV-R1016-GSB
SCALE AS SHOWN
SHEET NO.

sleong 2/16/2012 5:39:57 PM CAHSRP-R1.TBL CHSR_half_black-pdf995.pc3 C:\Documents and Settings\sleong\My Documents\NDMProj\356751 - California High Speed Rail - SR99 Improvements\1S-CV-R1016-GSB_REVISED.dgn

CURVE DATA

NO.	R	Δ	T	L
25	319.00′	89°14′16"	314.78′	496.84′
26	200.00′	42°26′19"	77.65′	148.14′

LINE DATA

NO.	BEARING	DISTANCE
33	S 89°29′00" E	1349.41′
34	N 48°00′38" E	24.49′

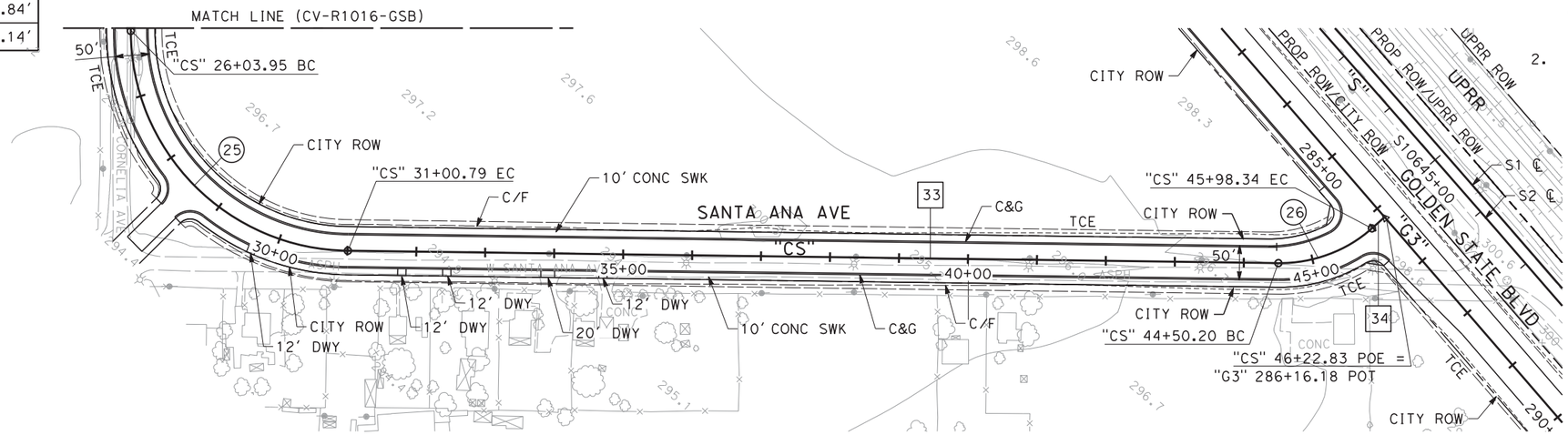

PLAN

NOTES:

1. ROW SHOWN REPRESENTS THE MINIMUM ANTICIPATED ROW REQUIREMENTS. ACCURATE ROW AND ACCESS DATA WILL BE MADE AVAILABLE PRIOR TO AWARD.
2. SEE SHEETS CV-R1001-GSB THRU CV-R1011-GSB FOR GOLDEN STATE BLVD.

100 0 100 200
1"=100′ HOR
SCALE APPLICABLE FOR FULL SIZE ONLY

10 0 10 20
1"=10′ VERT
SCALE APPLICABLE FOR FULL SIZE ONLY

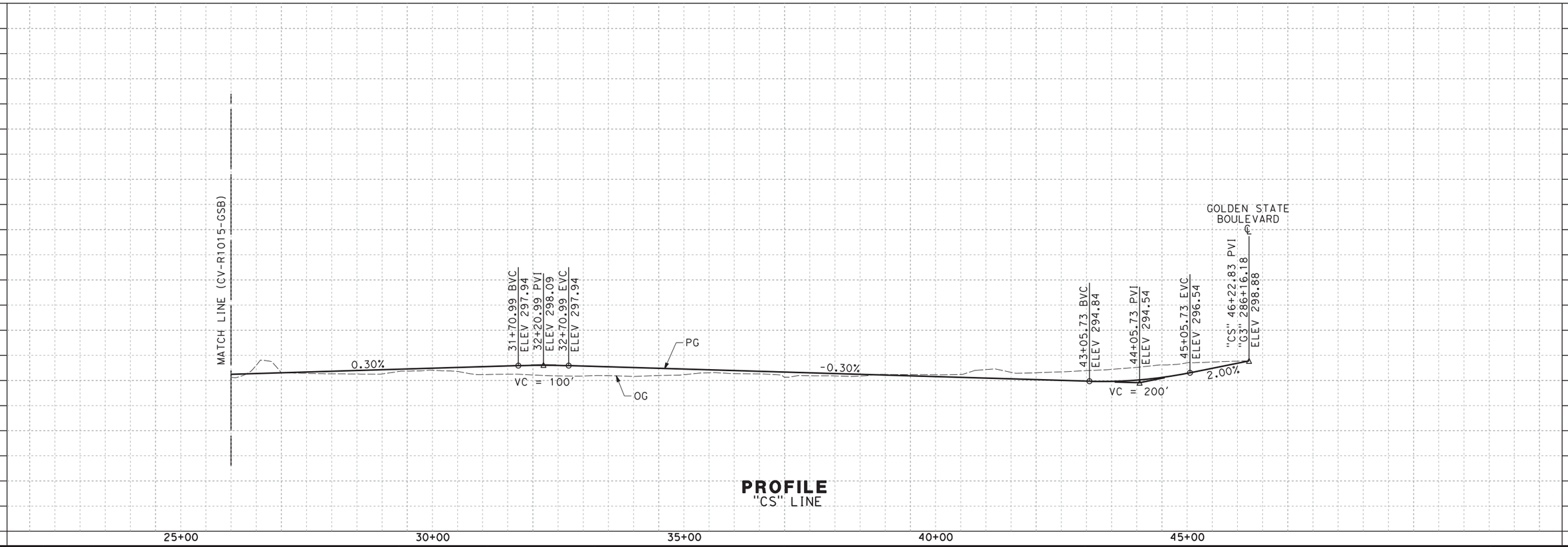

PROFILE
"CS" LINE

REV	DATE	BY	CHK	APP	DESCRIPTION

DESIGNED BY V. CHIO
DRAWN BY D. ELKINS
CHECKED BY L. HEUSTON
IN CHARGE F. NOBARI
DATE 12/08/11

PROPOSED PRELIMINARY DESIGN

NOT FOR CONSTRUCTION

AECOM Technical Services, Inc.
2020 L Street, Suite 300
Sacramento, CA 95811
CH2MHILL

CALIFORNIA HIGH-SPEED RAIL AUTHORITY

CALIFORNIA HIGH-SPEED TRAIN PROJECT
SIERRA SUBDIVISION
PACKAGE 1A
ROADWAY
PLAN AND PROFILE
CORNELIA AVENUE/SANTA ANA AVENUE

CONTRACT NO.
DRAWING NO. CV-R1017-GSB
SCALE AS SHOWN
SHEET NO.

sleong 12/5/2011 6:37:57 PM CAHSRP-R1.TBL CHSR_half_black-pdf995.pc3 C:\Documents and Settings\sleong\My Documents\NDMProj\356751 - California High Speed Rail - SR99 Improvements\1S-CV-R1017-GSB.dgn

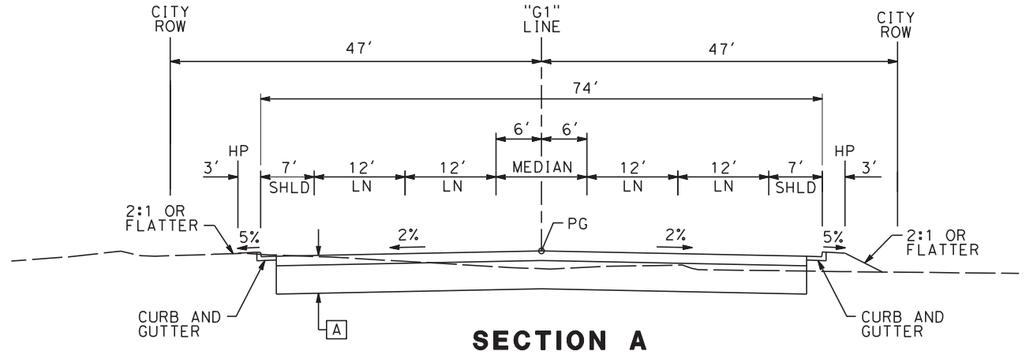

SECTION A

"G1" 100+00 TO 104+50

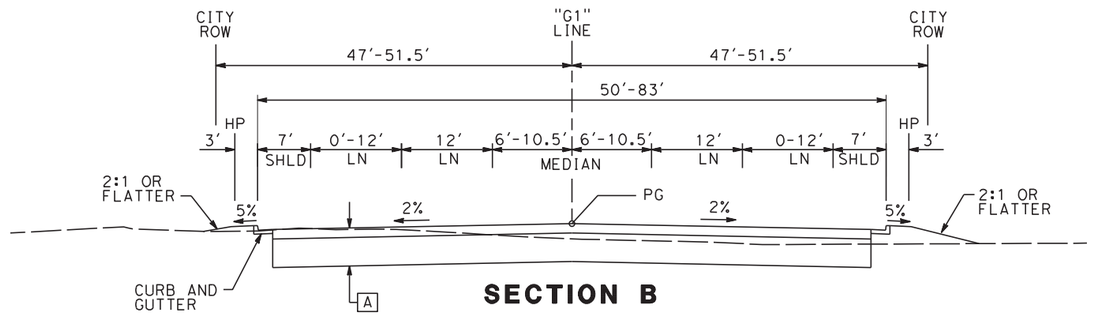

SECTION B

"G1" 104+50 TO 107+70
"G1" 108+10 TO 113+00
"G1" 134+25 TO 136+05 (SEE NOTE 3)
"G1" 136+45 TO 142+09 (SEE NOTE 3)

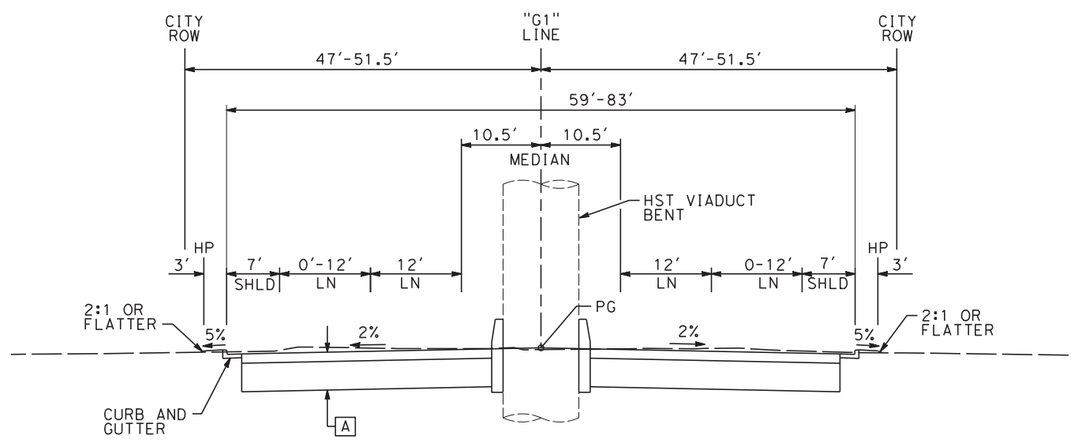

SECTION C

"G1" 107+70 TO 108+10
"G1" 136+05 TO 136+45 (SEE NOTE 3)

NOTES:

1. GOLDEN STATE BLVD ULTIMATE STREET WIDTH/CLASSIFICATION SUBJECT TO VERIFICATION.
2. RIGHT OF WAY WIDTH BASED ON CITY OF FRESNO UNDIVIDED COLLECTORS (NEW GROWTH AREA) TYPICAL STREET CROSS-SECTION.
3. EXISTING STORM WATER BASIN ADJACENT TO GOLDEN STATE BLVD TO BE MODIFIED FROM STA 134+00 TO 141+00. SEE GRADING AND DRAINAGE PLANS FOR DETAILS OF MODIFICATIONS

A 0.40' HMA OVER 1.15' AB

B 0.55' HMA OVER 1.45' AB

LIMITS OF AC DIKE	
STREET ALIGNMENT DESIGNATION AND STATION LIMITS	RT EP OR LT EP
"G1" 142+10 TO 160+00	LT
"G1" 142+10 TO 160+00	RT
"G2" 160+00 TO 192+00	LT
"G2" 160+00 TO 188+00	RT
"G3" 192+00 TO 306+00	LT
"G3" 234+20 TO 257+50	RT
"G3" 286+50 TO 305+90	RT

10 0 10 20
1"=10'
SCALE APPLICABLE FOR FULL SIZE ONLY

REV	DATE	BY	CHK	APP	DESCRIPTION

DESIGNED BY V. CHIO
DRAWN BY D. ELKINS
CHECKED BY L. HEUSTON
IN CHARGE F. NOBARI
DATE 11/22/11

PROPOSED PRELIMINARY DESIGN

NOT FOR CONSTRUCTION

AECOM Technical Services, Inc.
2020 L Street, Suite 300
Sacramento, CA 95811
CH2MHILL

CALIFORNIA HIGH-SPEED RAIL AUTHORITY

CALIFORNIA HIGH-SPEED TRAIN PROJECT
SIERRA SUBDIVISION
PACKAGE 1A
ROADWAY
TYPICAL SECTION
GOLDEN STATE BOULEVARD

CONTRACT NO.
DRAWING NO. CV-R3001-GSB
SCALE AS SHOWN
SHEET NO.

sleong 11/16/2011 10:59:24 AM CAHSRP-R1.TBL CHSR_half_black-pdf995.pdf C:\Documents and Settings\sleong\My Documents\NDMProj\356751 - California High Speed Rail - SR99 Improvements\1S-CV-R3001-GSB.dgn

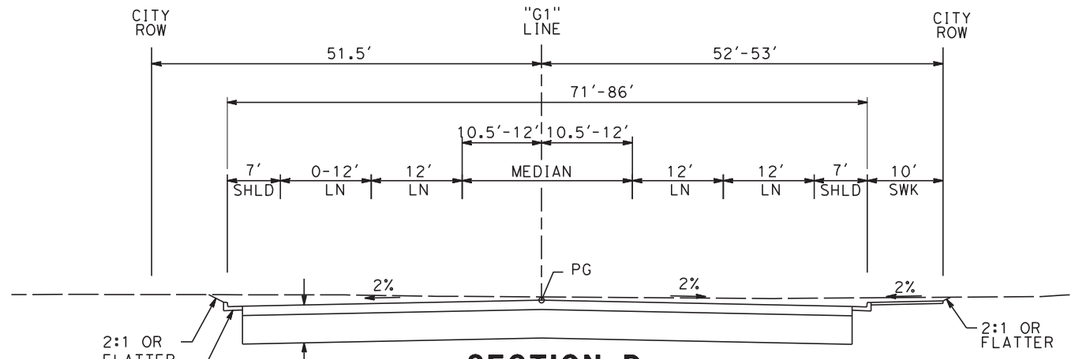

SECTION D

"G1" 113+00 TO 115+45
"G1" 125+00 TO 134+25

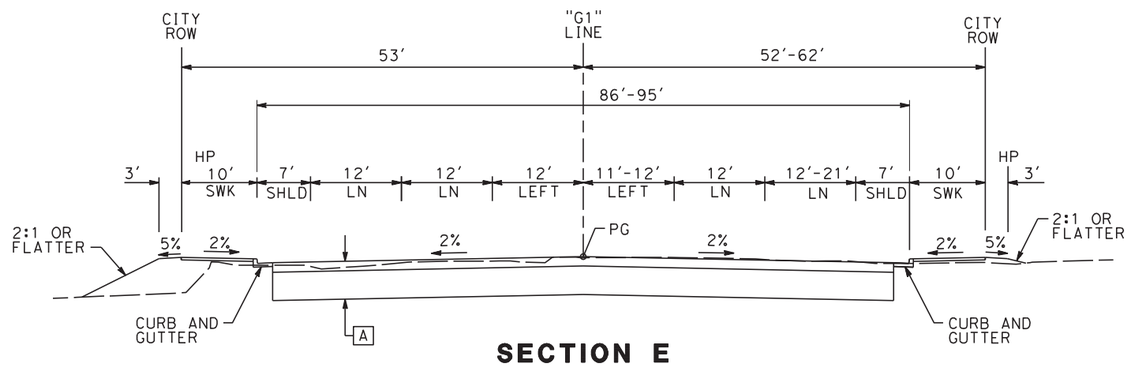

SECTION E

"G1" 115+45 TO 119+09.50

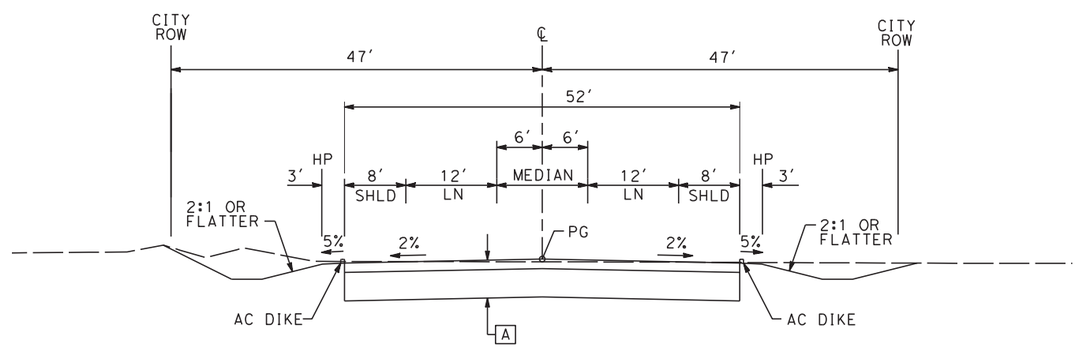

SECTION F

"G1" 142+09 TO 160+00
"G2" 160+00 TO 185+00
"G3" 286+50 TO 303+75

NOTES:

A 0.40' HMA OVER 1.15' AB

B 0.55' HMA OVER 1.45' AB

10 0 10 20
1"=10'
SCALE APPLICABLE FOR FULL SIZE ONLY

REV	DATE	BY	CHK	APP	DESCRIPTION

DESIGNED BY V. CHIO
DRAWN BY D. ELKINS
CHECKED BY L. HEUSTON
IN CHARGE F. NOBARI
DATE 11/22/11

PROPOSED PRELIMINARY DESIGN

NOT FOR CONSTRUCTION

AECOM Technical Services, Inc.
2020 L Street, Suite 300
Sacramento, CA 95811
CH2MHILL

CALIFORNIA HIGH-SPEED RAIL AUTHORITY

CALIFORNIA HIGH-SPEED TRAIN PROJECT
SIERRA SUBDIVISION
PACKAGE 1A
ROADWAY
TYPICAL SECTION
GOLDEN STATE BOULEVARD

CONTRACT NO.
DRAWING NO. CV-R3002-GSB
SCALE AS SHOWN
SHEET NO.

sleong 11/16/2011 11:00:00 AM CAHSRP-R1.TBL CHSR_half_black-pdf995.pc4 C:\Documents and Settings\sleong\My Documents\NDMProj\356751 - California High Speed Rail - SR99 Improvements\1S-CV-R3002-GSB.dgn

NOTES:

1. EXISTING STORM WATER BASIN ADJACENT TO GOLDEN STATE BLVD TO BE MODIFIED FROM STA 194+50 TO 197+00. SEE GRADING AND DRAINAGE PLANS FOR DETAILS OF MODIFICATIONS

[A] 0.40' HMA OVER 1.15' AB

[B] 0.55' HMA OVER 1.45' AB

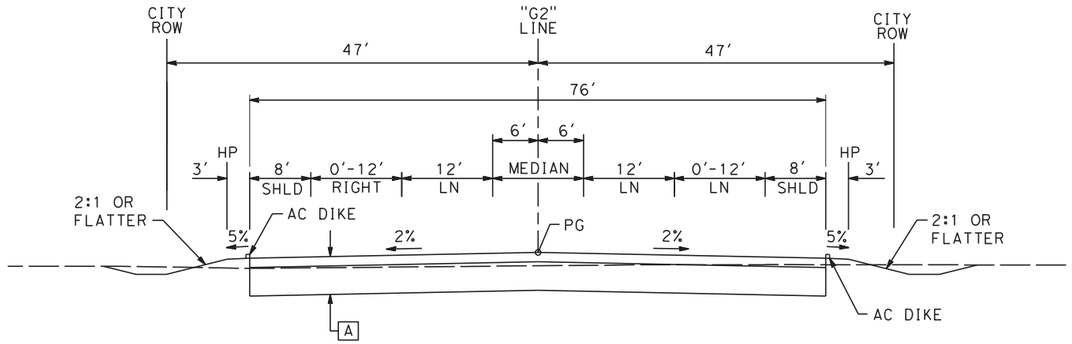

SECTION G

"G2" 185+00 TO 188+00

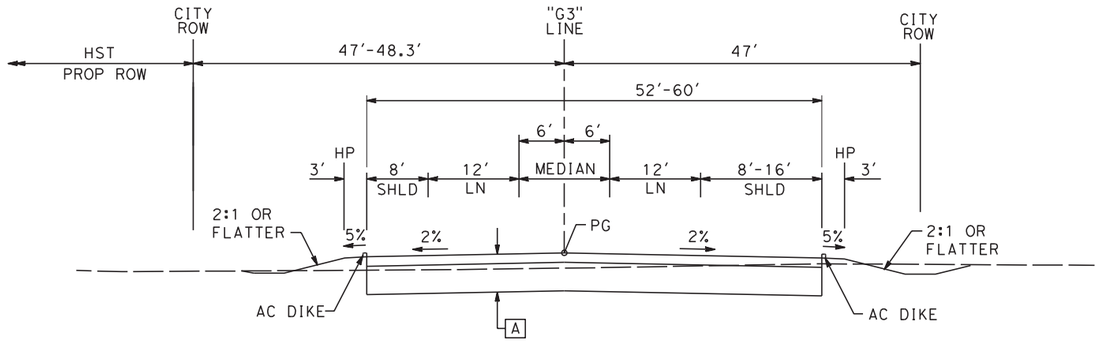

SECTION J

"G3" 234+20 TO 257+50

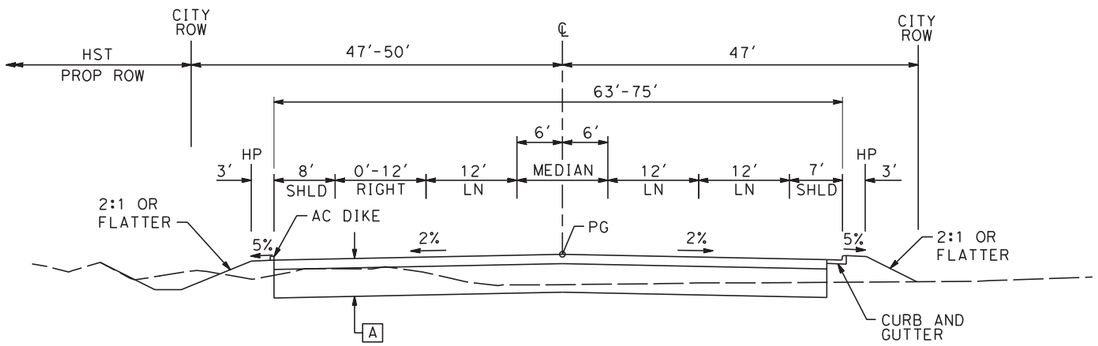

SECTION H

"G2" 188+00 TO 192+00
"G3" 192+00 TO 233+50 (SEE NOTE 1)

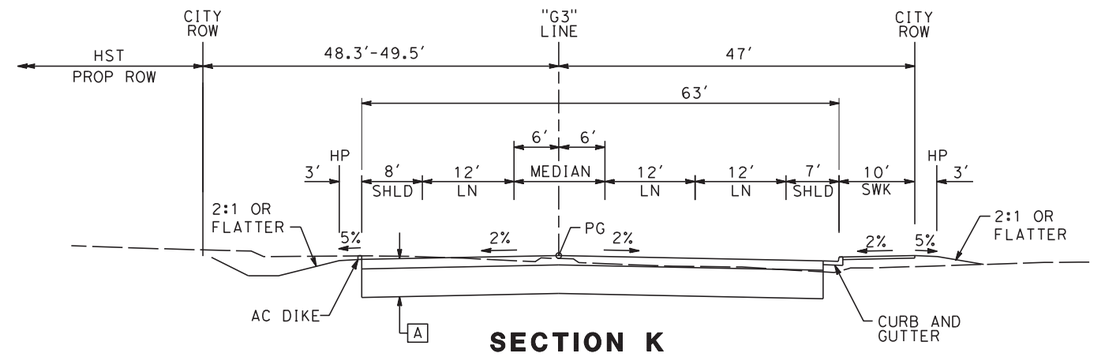

SECTION K

"G3" 257+50 TO 262+00

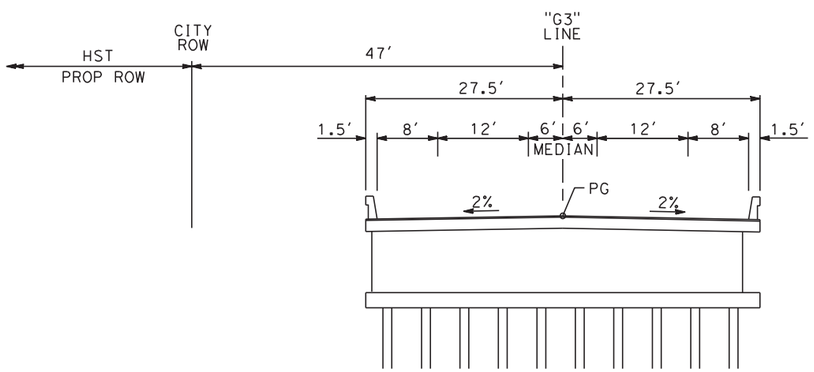

HERNDON CANAL BRIDGE

SECTION I

"G3" 233+50 TO 234+20

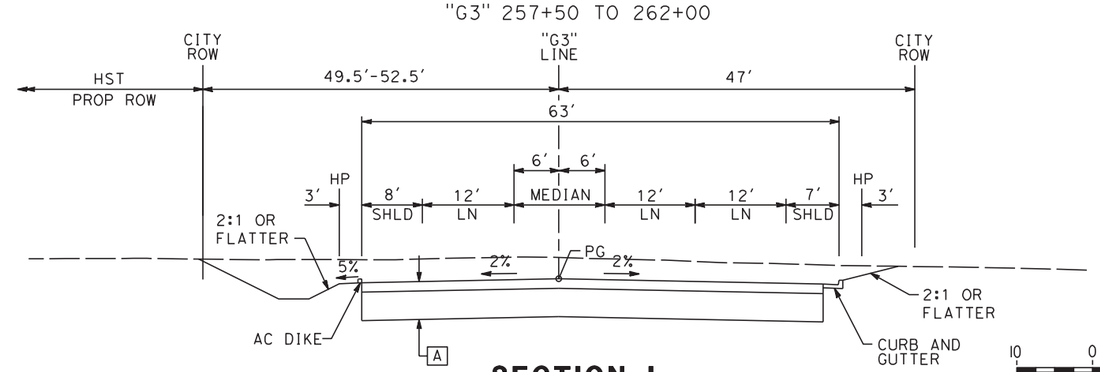

SECTION L

"G3" 262+00 TO 286+50 (SEE NOTE 1)

10 0 10 20
1"=10'
SCALE APPLICABLE FOR FULL SIZE ONLY

REV	DATE	BY	CHK	APP	DESCRIPTION

DESIGNED BY V. CHIO
DRAWN BY D. ELKINS
CHECKED BY L. HEUSTON
IN CHARGE F. NOBARI
DATE 11/22/11

PROPOSED PRELIMINARY DESIGN

NOT FOR CONSTRUCTION

AECOM Technical Services, Inc.
2020 L Street, Suite 300
Sacramento, CA 95811
CH2MHILL

CALIFORNIA HIGH-SPEED RAIL AUTHORITY

CALIFORNIA HIGH-SPEED TRAIN PROJECT
SIERRA SUBDIVISION
PACKAGE 1A
ROADWAY
TYPICAL SECTION
GOLDEN STATE BOULEVARD

CONTRACT NO.
DRAWING NO. CV-R3003-GSB
SCALE AS SHOWN
SHEET NO.

sleong 11/16/2011 11:00:50 AM CAHSRP-R1.TBL CHSR_half_black-pdf995.pt C:\Documents and Settings\sleong\My Documents\NDMProj\356751 - California High Speed Rail - SR99 Improvements\1S-CV-R3003-GSB.dgn

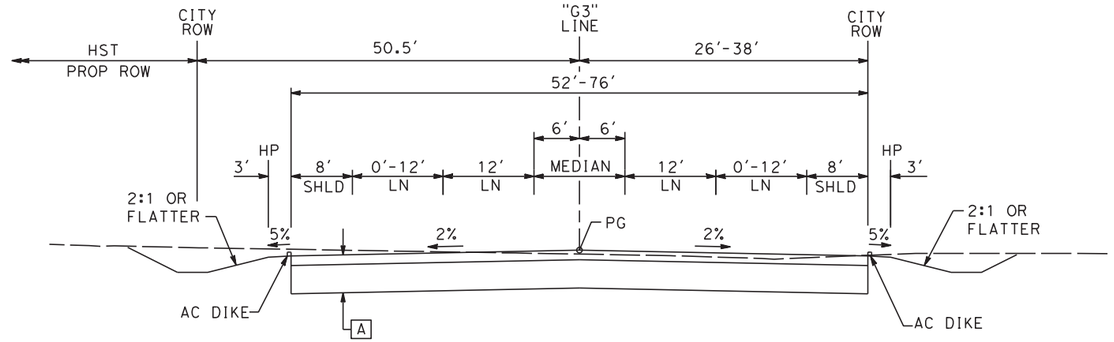

SECTION M

"G3" 303+75 TO 305+90

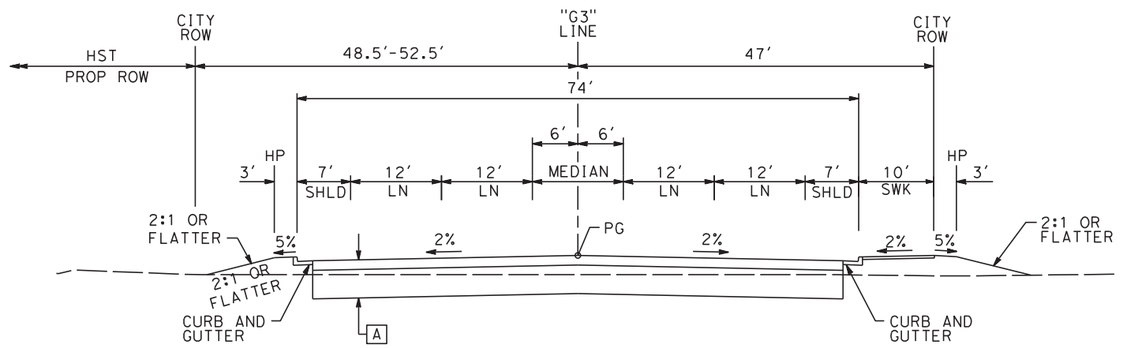

SECTION N

"G3" 305+90 TO 332+60 (SEE NOTE 1)

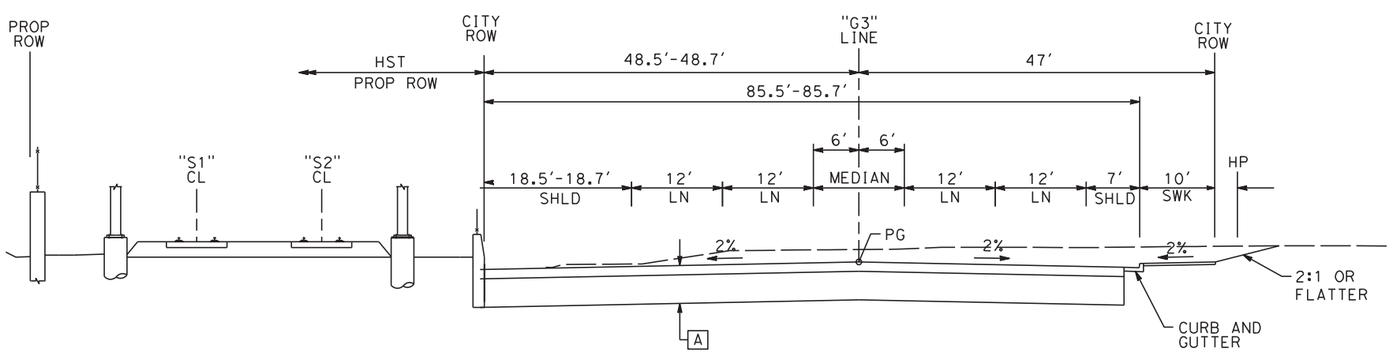

SECTION O

"G3" 332+60 TO 333+60

NOTES:

1. EXISTING STORM WATER BASIN ADJACENT TO GOLDEN STATE BLVD TO BE MODIFIED FROM STA 279+50 TO 281+00 AND STA 317+00 TO 317+50. SEE GRADING AND DRAINAGE PLANS FOR DETAILS OF MODIFICATIONS

A 0.40' HMA OVER 1.15' AB

B 0.55' HMA OVER 1.45' AB

10 0 10 20

1"=10'

SCALE APPLICABLE FOR FULL SIZE ONLY

REV	DATE	BY	CHK	APP	DESCRIPTION

DESIGNED BY V. CHIO
DRAWN BY D. ELKINS
CHECKED BY L. HEUSTON
IN CHARGE F. NOBARI
DATE 11/22/11

PROPOSED PRELIMINARY DESIGN

NOT FOR CONSTRUCTION

AECOM Technical Services, Inc.
2020 L Street, Suite 300
Sacramento, CA 95811

CH2MHILL

CALIFORNIA HIGH-SPEED RAIL AUTHORITY

CALIFORNIA HIGH-SPEED TRAIN PROJECT
SIERRA SUBDIVISION
PACKAGE 1A
ROADWAY
TYPICAL SECTION
GOLDEN STATE BOULEVARD

CONTRACT NO.
DRAWING NO. CV-R3004-GSB
SCALE AS SHOWN
SHEET NO.

sleong 11/16/2011 11:01:26 AM CAHSRP-R1.TBL CHSR_half_black-pdf995.pc3 C:\Documents and Settings\sleong\My Documents\NDMProj\356751 - California High Speed Rail - SR99 Improvements\1S-CV-R3004-GSB.dgn

NOTES:

A 0.40' HMA OVER 1.15' AB

B 0.55' HMA OVER 1.45' AB

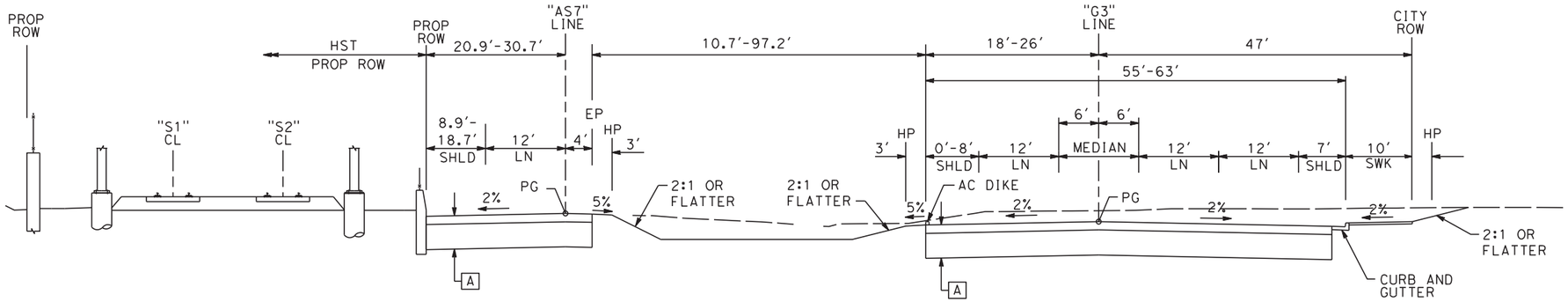

SECTION P

"G3" 333+60 TO 335+75
"AS7" 11+80 TO 13+96

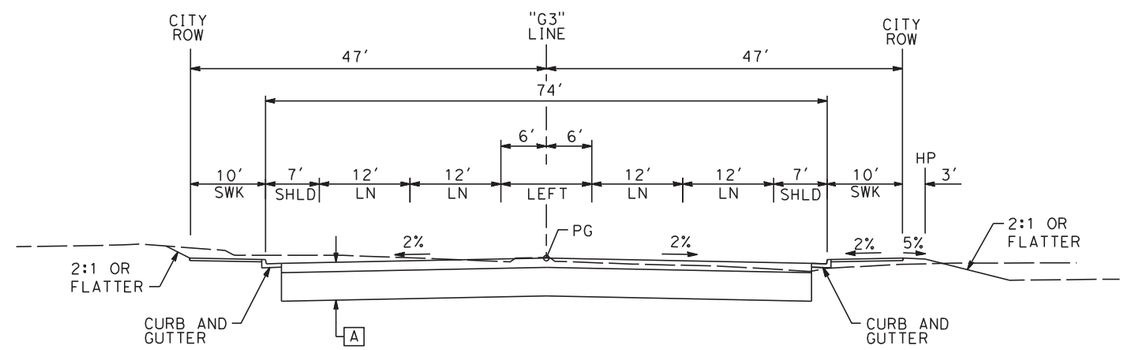

SECTION Q

"G3" 335+75 TO 338+00

10 0 10 20
1"=10'
SCALE APPLICABLE FOR FULL SIZE ONLY

REV	DATE	BY	CHK	APP	DESCRIPTION

DESIGNED BY V. CHIO
DRAWN BY D. ELKINS
CHECKED BY L. HEUSTON
IN CHARGE F. NOBARI
DATE 11/22/11

PROPOSED PRELIMINARY DESIGN

NOT FOR CONSTRUCTION

AECOM Technical Services, Inc.
2020 L Street, Suite 300
Sacramento, CA 95811
CH2MHILL

CALIFORNIA HIGH-SPEED RAIL AUTHORITY

CALIFORNIA HIGH-SPEED TRAIN PROJECT
SIERRA SUBDIVISION
PACKAGE 1A
ROADWAY
TYPICAL SECTION
GOLDEN STATE BOULEVARD

CONTRACT NO.
DRAWING NO. CV-R3005-GSB
SCALE AS SHOWN
SHEET NO.

sleong 11/16/2011 2:27:43 PM CAHSRP-R1.TBL CHSR_half_black-pdf995.pc3 C:\Documents and Settings\sleong\My Documents\NDMProj\356751 - California High Speed Rail - SR99 Improvements\1S-CV-R3005-GSB.dgn

NOTES:

A 0.40' HMA OVER 1.15' AB

B 0.55' HMA OVER 1.45' AB

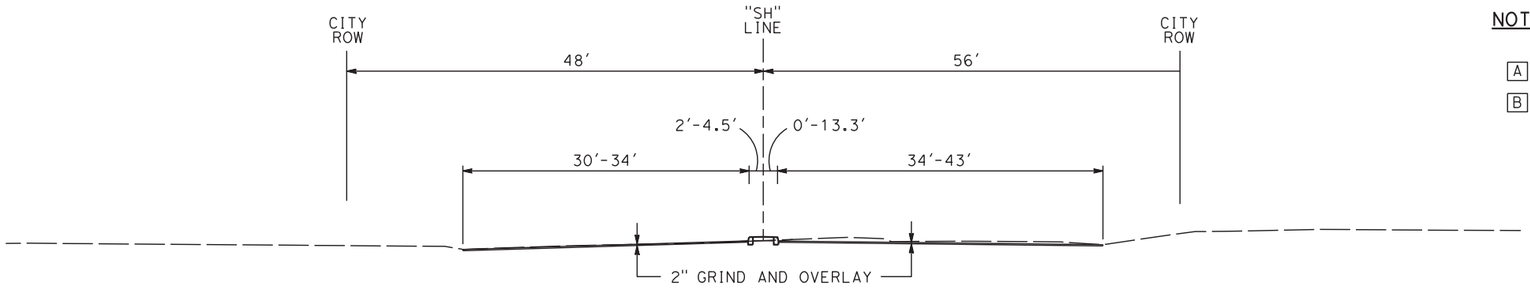

SECTION AA

"SH" 51+88 TO 53+88

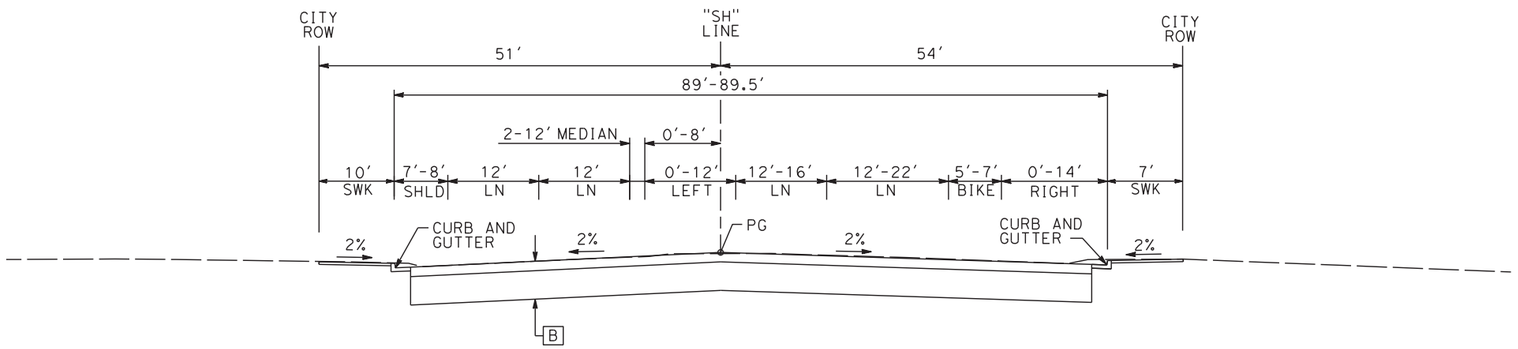

SECTION BB

"SH" 53+88 TO 56+50

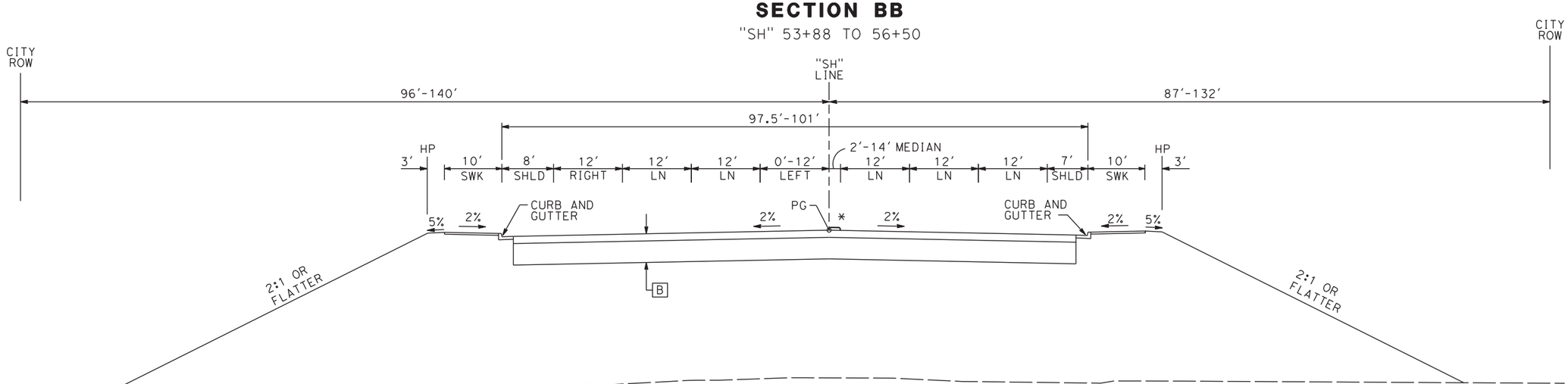

SECTION CC

"SH" 56+50 TO 61+75

* RAISED MEDIAN STA 60+20 TO 61+75

10 0 10 20

1"=10'

SCALE APPLICABLE FOR FULL SIZE ONLY

REV	DATE	BY	CHK	APP	DESCRIPTION

DESIGNED BY V. CHIO
DRAWN BY D. ELKINS
CHECKED BY L. HEUSTON
IN CHARGE F. NOBARI
DATE 2/17/12

PROPOSED PRELIMINARY DESIGN

NOT FOR CONSTRUCTION

AECOM Technical Services, Inc.
2020 L Street, Suite 300
Sacramento, CA 95811

CH2MHILL

CALIFORNIA HIGH-SPEED RAIL AUTHORITY

CALIFORNIA HIGH-SPEED TRAIN PROJECT
SIERRA SUBDIVISION
PACKAGE 1A
ROADWAY
TYPICAL SECTION
SHAW AVENUE

CONTRACT NO.

DRAWING NO. CV-R3006-GSB

SCALE AS SHOWN

SHEET NO.

2/15/2012 9:42:11 AM CAHSRP-R1.TBL CHSR_half_black.plt C:\Documents and Settings\ychiu\My Documents\NDMProj\356751 - California High Speed Rail - SR99 Improvements\15-CV-R3006-GSB_REVISI
ychiu

NOTES:

A 0.40' HMA OVER 1.15' AB

B 0.55' HMA OVER 1.45' AB

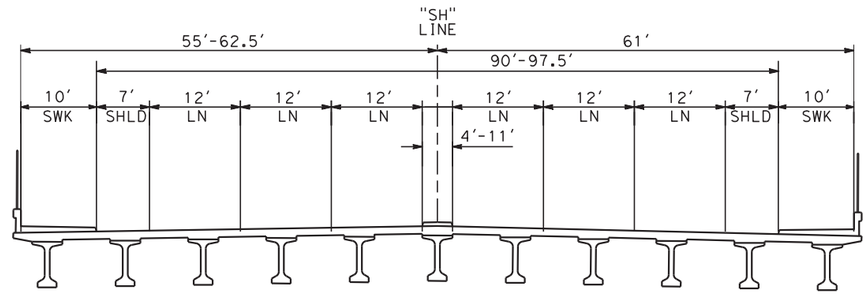

SHAW AVENUE OVERHEAD

SECTION DD

"SH" 61+75 TO 68+00

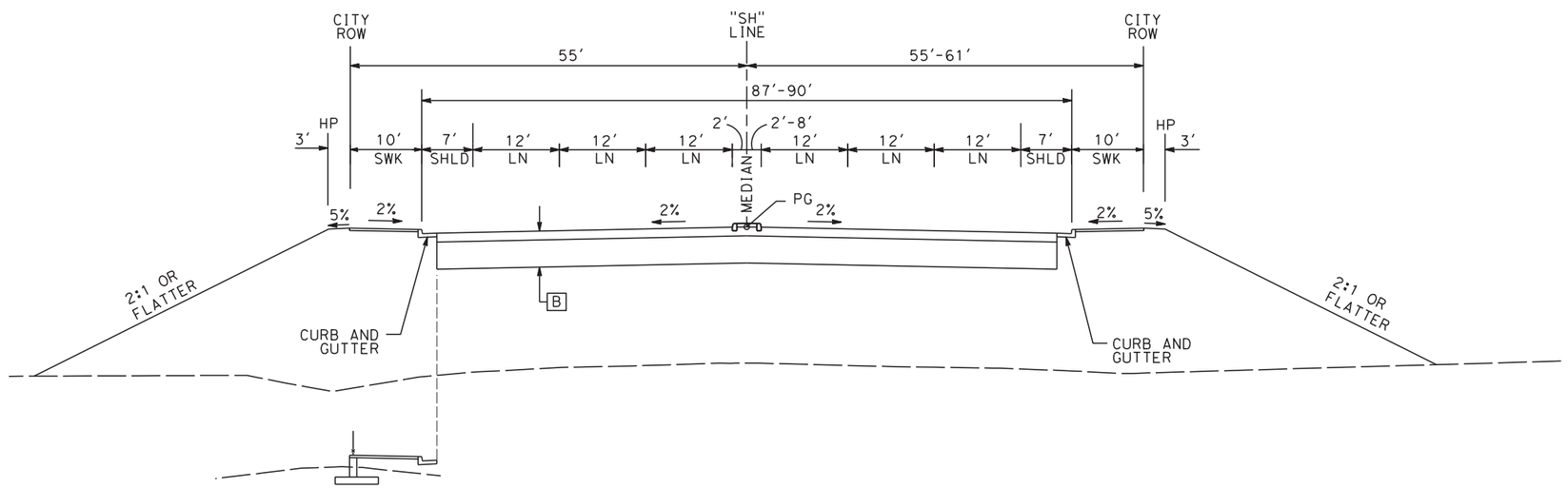

"SH" 74+00 TO 75+00

SECTION EE

"SH" 68+00 TO 76+00

10 0 10 20

1"=10'

SCALE APPLICABLE FOR FULL SIZE ONLY

REV	DATE	BY	CHK	APP	DESCRIPTION

DESIGNED BY V. CHIO
DRAWN BY D. ELKINS
CHECKED BY L. HEUSTON
IN CHARGE F. NOBARI
DATE 11/22/11

PROPOSED PRELIMINARY DESIGN

NOT FOR CONSTRUCTION

AECOM Technical Services, Inc.
2020 L Street, Suite 300
Sacramento, CA 95811

CH2MHILL

CALIFORNIA HIGH-SPEED RAIL AUTHORITY

CALIFORNIA HIGH-SPEED TRAIN PROJECT
SIERRA SUBDIVISION
PACKAGE 1A
ROADWAY
TYPICAL SECTION
SHAW AVENUE

CONTRACT NO.

DRAWING NO. CV-R3007-GSB

SCALE AS SHOWN

SHEET NO.

11/16/2011 11:05:07 AM CAHSRP-R1.TBL CHSR_half_black-pdf995.pen sleong
C:\Documents and Settings\sleong\My Documents\NDMProj\356751 - California High Speed Rail - SR99 Improvements\1S-CV-R3007-GSB.dgn

NOTES:

A 0.40' HMA OVER 1.15' AB

B 0.55' HMA OVER 1.45' AB

INFORMATION SHOWN IS BASED ON 15% DESIGN. ADDITIONAL DESIGN EFFORTS BY CITY OF FRESNO ARE NEEDED TO ESTABLISH THE FINAL CONFIGURATION.

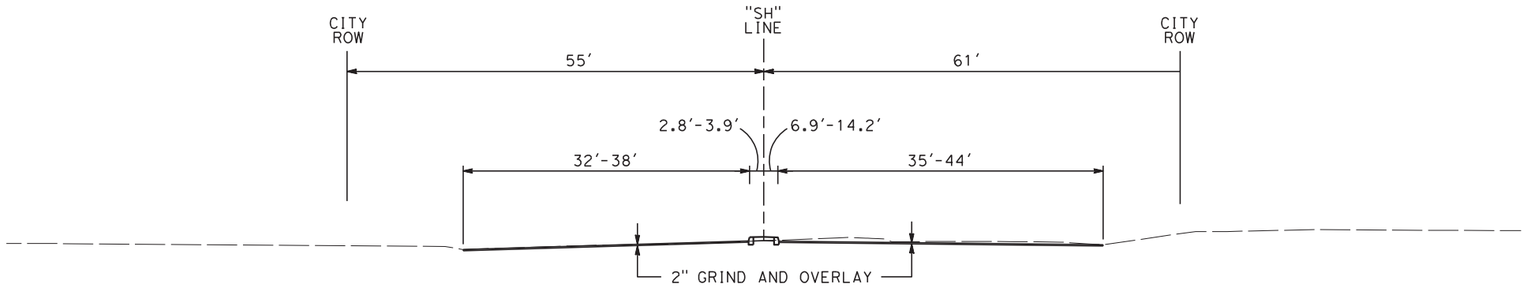

SECTION FF

"SH" 76+00 TO 79+50

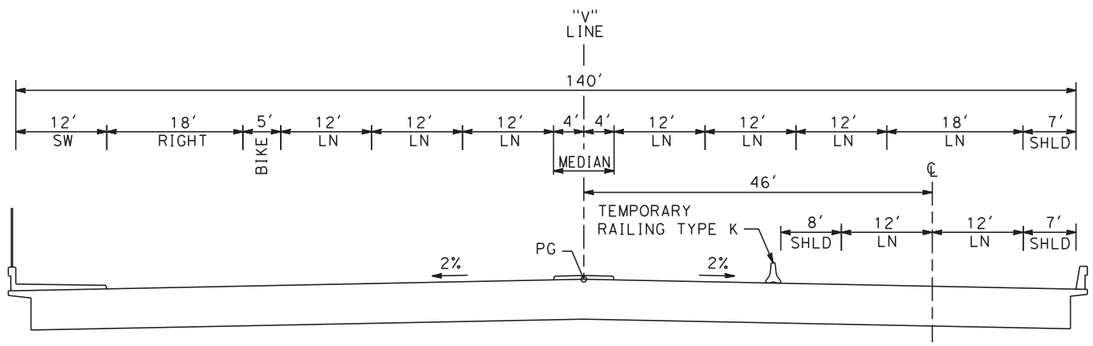

VETERANS BOULEVARD OVERHEAD

SECTION GG

"V" 105+00 TO 110+25

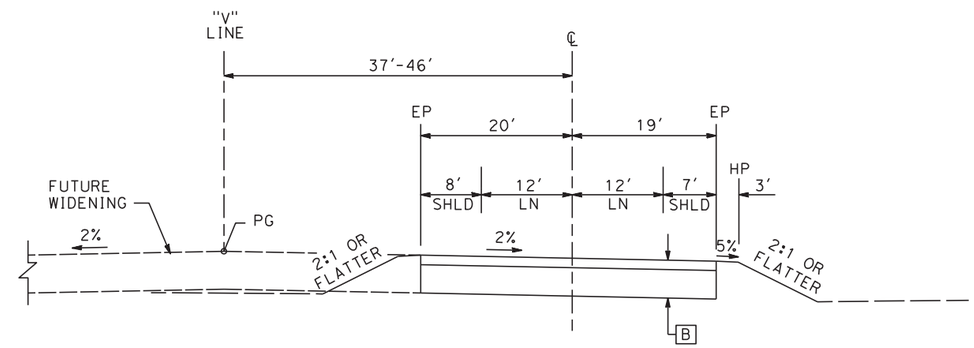

SECTION HH

"V" 110+25 TO 123+00

10 0 10 20

1"=10'

SCALE APPLICABLE FOR FULL SIZE ONLY

REV	DATE	BY	CHK	APP	DESCRIPTION

DESIGNED BY V. CHIO
DRAWN BY D. ELKINS
CHECKED BY L. HEUSTON
IN CHARGE F. NOBARI
DATE 12/08/11

PROPOSED PRELIMINARY DESIGN

NOT FOR CONSTRUCTION

AECOM Technical Services, Inc.
2020 L Street, Suite 300
Sacramento, CA 95811

CH2MHILL

CALIFORNIA HIGH-SPEED RAIL AUTHORITY

CALIFORNIA HIGH-SPEED TRAIN PROJECT
SIERRA SUBDIVISION
PACKAGE 1A
ROADWAY
TYPICAL SECTION
SHAW AVENUE & VETERANS BOULEVARD

CONTRACT NO.

DRAWING NO. CV-R3008-GSB

SCALE AS SHOWN

SHEET NO.

sleong 12/6/2011 10:37:38 AM CAHSRP-R1.TBL CHSR_half_black-pdf995.pltd C:\Documents and Settings\sleong\My Documents\NDMProj\356751 - California High Speed Rail - SR99 Improvements\1S-CV-R3008-GSB.dgn

NOTES:

A 0.40' HMA OVER 1.15' AB

B 0.55' HMA OVER 1.45' AB

INFORMATION SHOWN IS BASED ON 15% DESIGN. ADDITIONAL DESIGN EFFORTS BY CITY OF FRESNO ARE NEEDED TO ESTABLISH THE FINAL CONFIGURATION.

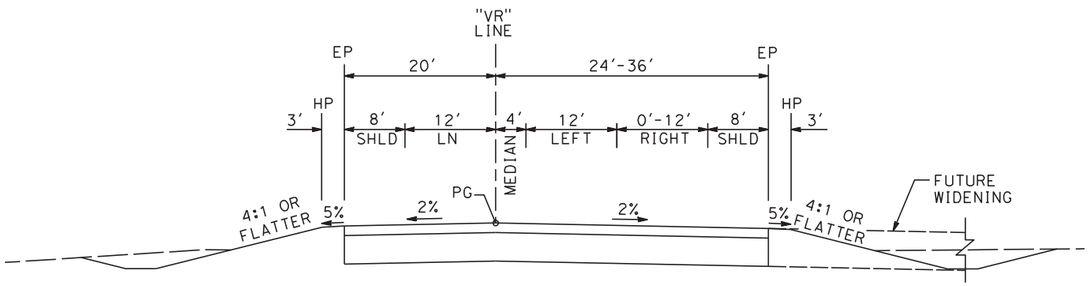

SECTION II

"VR" 15+75 TO 18+50

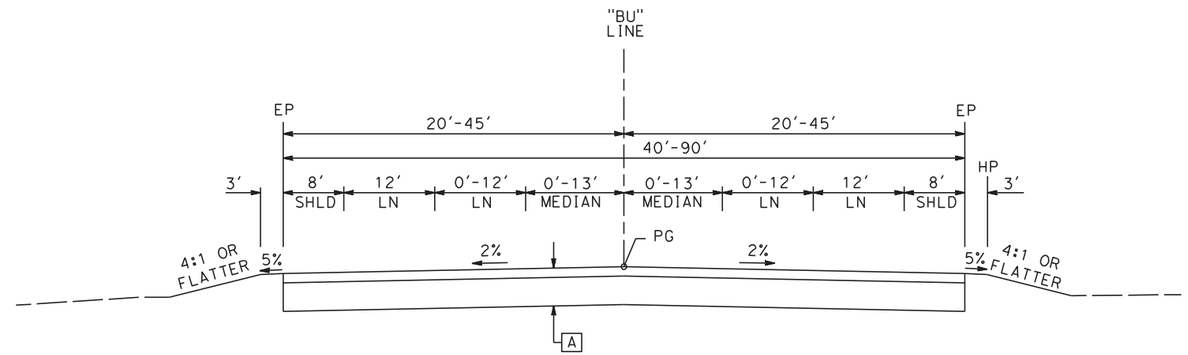

SECTION KK

"BU" 110+16.58 TO 117+80

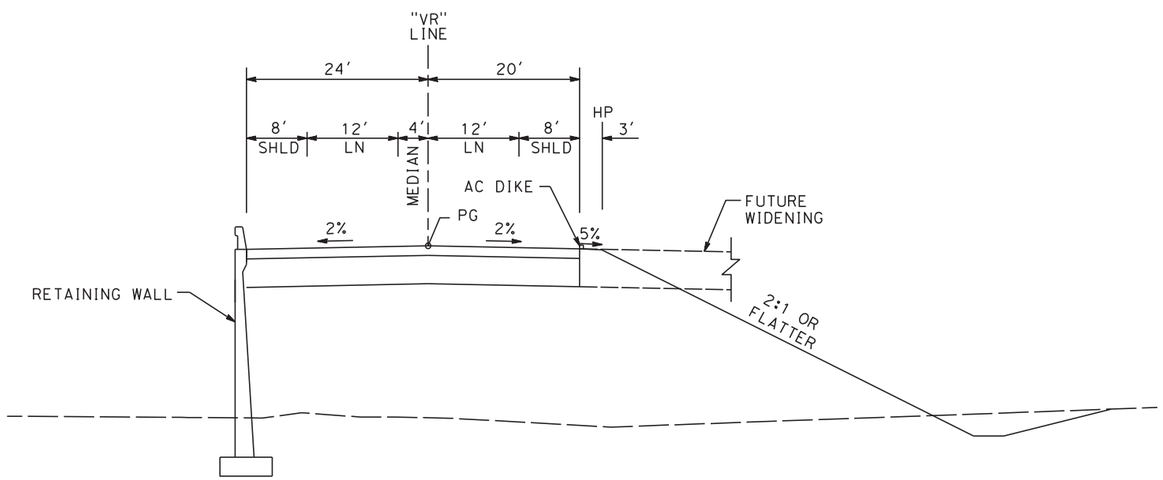

SECTION JJ

"VR" 10+00 TO 15+75

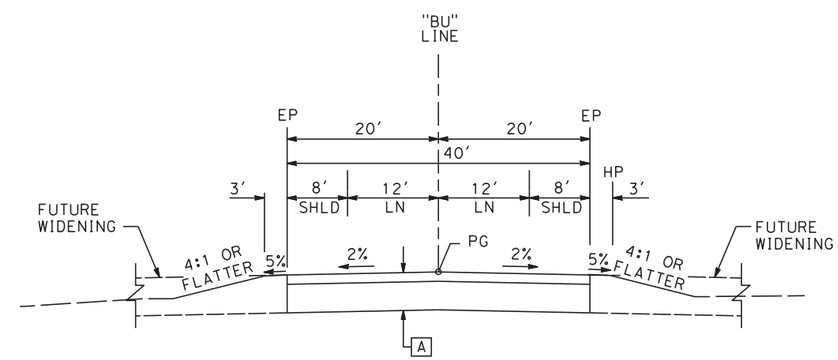

SECTION LL

"BU" 117+80 TO 132+10

10 0 10 20

1"=10'

SCALE APPLICABLE FOR FULL SIZE ONLY

REV	DATE	BY	CHK	APP	DESCRIPTION

DESIGNED BY V. CHIO
DRAWN BY D. ELKINS
CHECKED BY L. HEUSTEN
IN CHARGE F. NOBARI
DATE 11/22/11

PROPOSED PRELIMINARY DESIGN

NOT FOR CONSTRUCTION

AECOM Technical Services, Inc.
2020 L Street, Suite 300
Sacramento, CA 95811

CH2MHILL

CALIFORNIA HIGH-SPEED RAIL AUTHORITY

CALIFORNIA HIGH-SPEED TRAIN PROJECT
SIERRA SUBDIVISION
PACKAGE 1A
ROADWAY
TYPICAL SECTION
VETERANS BOULEVARD & BULLARD AVENUE

CONTRACT NO.

DRAWING NO. CV-R3009-GSB

SCALE AS SHOWN

SHEET NO.

sleong 11/16/2011 11:06:19 AM CAHSRP-R1.TBL CHSR_half_black-pdf995.pc N:\Documents and Settings\sleong\My Documents\NDMProj\356751 - California High Speed Rail - SR99 Improvements\1S-CV-R3009-GSB.dgn

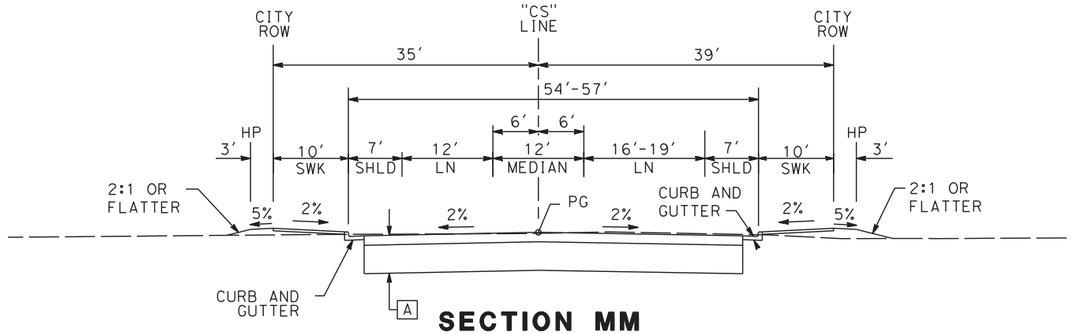

SECTION MM

"CS" 10+40 TO 13+00

NOTES:

A 0.40′ HMA OVER 1.15′ AB

B 0.55′ HMA OVER 1.45′ AB

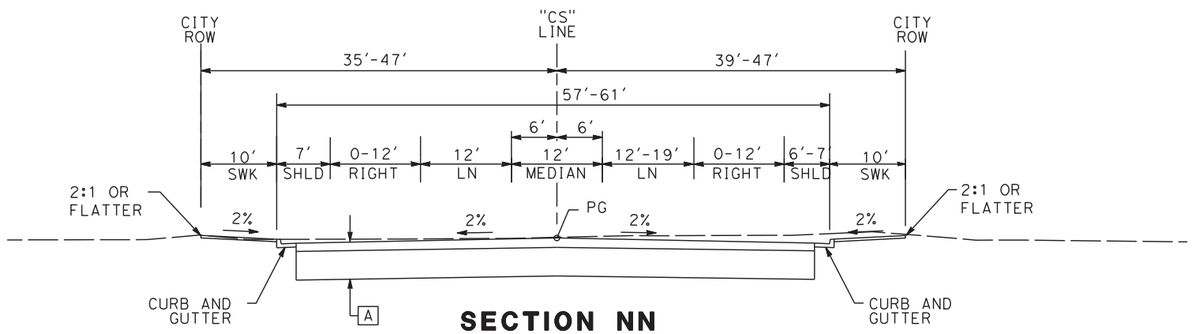

SECTION NN

"CS" 13+00 TO 20+50

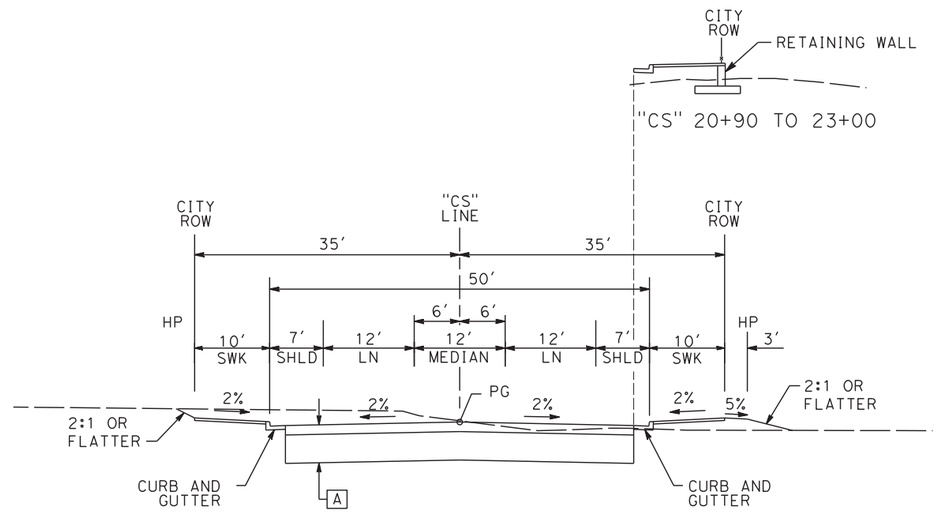

SECTION OO

"CS" 20+50 TO 45+80

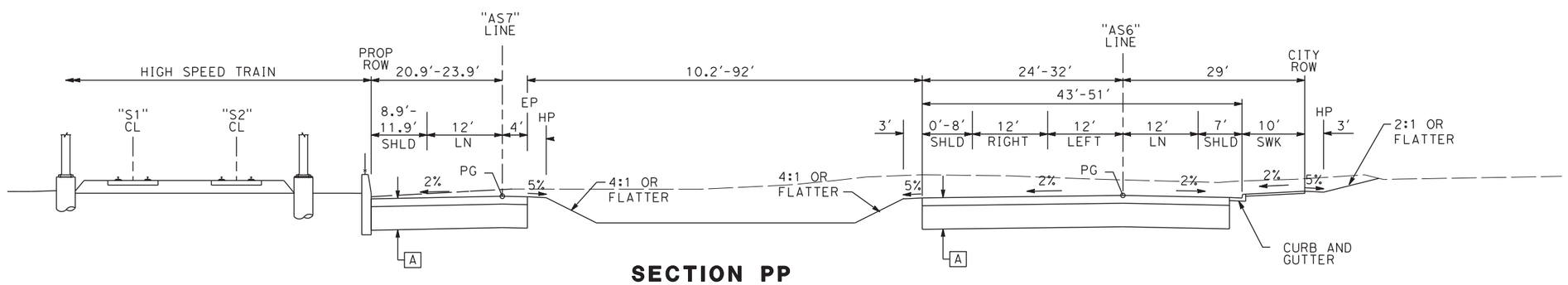

SECTION PP

"AS6" 10+30 TO 11+25
"AS7 12+26 TO 13+96

10 0 10 20

1"=10′

SCALE APPLICABLE FOR FULL SIZE ONLY

REV	DATE	BY	CHK	APP	DESCRIPTION

DESIGNED BY V. CHIO
DRAWN BY D. ELKINS
CHECKED BY L. HEUSTON
IN CHARGE F. NOBARI
DATE 2/17/12

PROPOSED PRELIMINARY DESIGN

NOT FOR CONSTRUCTION

AECOM Technical Services, Inc.
2020 L Street, Suite 300
Sacramento, CA 95811

CH2MHILL

CALIFORNIA HIGH-SPEED RAIL AUTHORITY

CALIFORNIA HIGH-SPEED TRAIN PROJECT
SIERRA SUBDIVISION
PACKAGE 1A
ROADWAY
TYPICAL SECTION
CORNELIA AVENUE AND MOTEL DRIVE

CONTRACT NO.
DRAWING NO. CV-R3010-GSB
SCALE AS SHOWN
SHEET NO.

ychiu 2/15/2012 9:43:11 AM CAHSRP-R1.TBL CHSR_half_black.plt C:\Documents and Settings\ychiu\My Documents\NDMProj\356751 - California High Speed Rail - SR99 Improvements\15-CV-R3010-GSB_REVISI

NOTES:

A 0.40' HMA OVER 1.15' AB

B 0.55' HMA OVER 1.45' AB

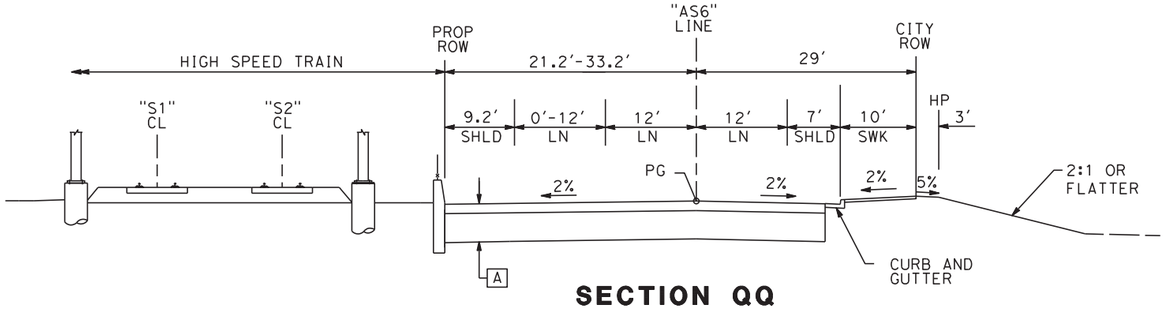

SECTION QQ

"AS6" 11+25 TO 12+25

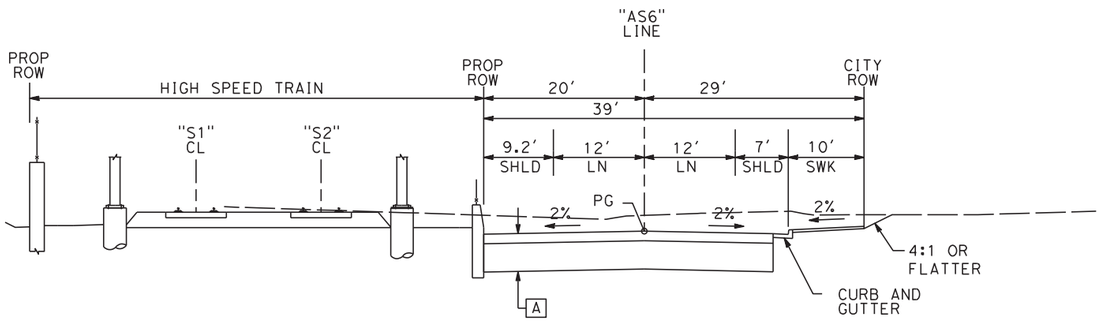

SECTION RR

"AS6" 12+25 TO 13+92

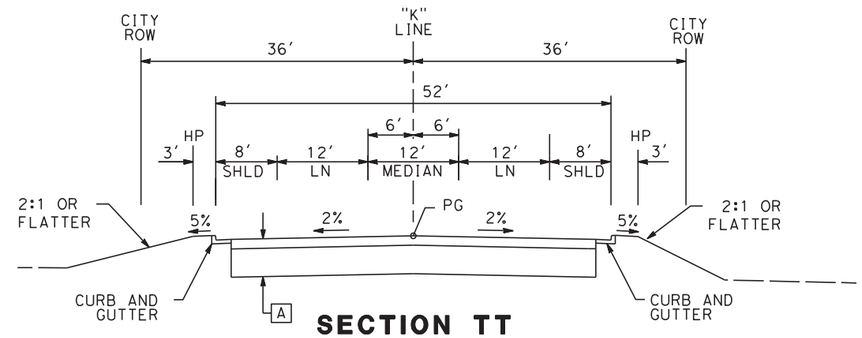

SECTION TT

"K" 10+50 TO 12+10

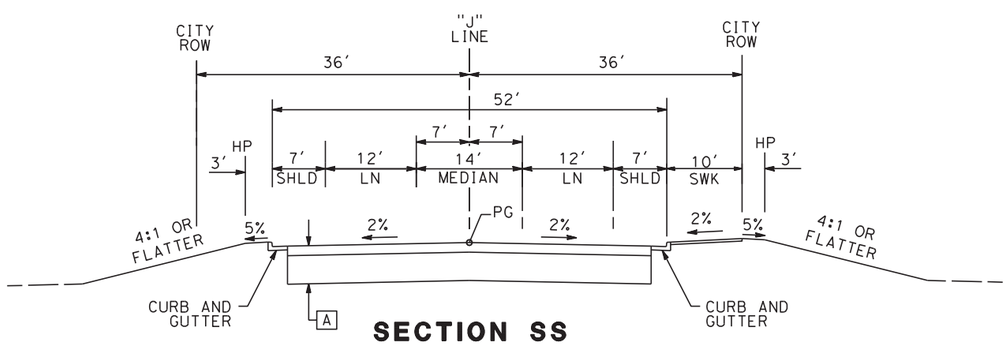

SECTION SS

"J" 10+00 TO 13+10

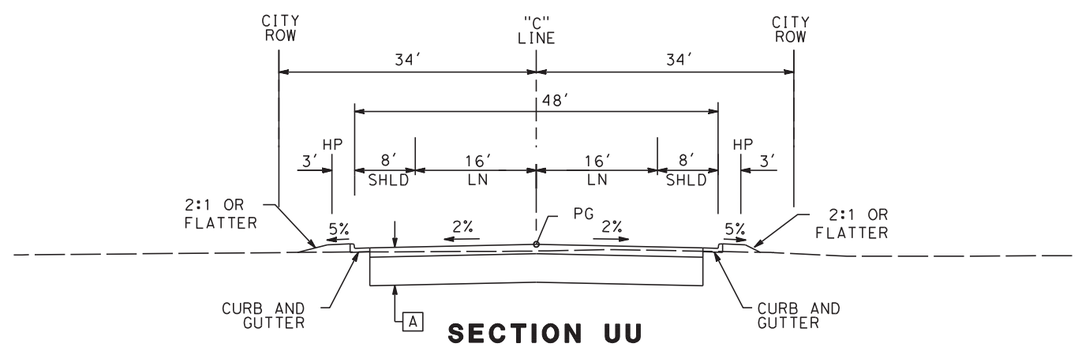

SECTION UU

"B" 10+95 TO 12+50

10 0 10 20

1"=10'

SCALE APPLICABLE FOR FULL SIZE ONLY

REV	DATE	BY	CHK	APP	DESCRIPTION

DESIGNED BY V. CHIO
DRAWN BY D. ELKINS
CHECKED BY L. HEUSTON
IN CHARGE F. NOBARI
DATE 11/22/11

PROPOSED PRELIMINARY DESIGN

NOT FOR CONSTRUCTION

AECOM Technical Services, Inc.
2020 L Street, Suite 300
Sacramento, CA 95811

CH2MHILL

CALIFORNIA HIGH-SPEED RAIL AUTHORITY

CALIFORNIA HIGH-SPEED TRAIN PROJECT
SIERRA SUBDIVISION
PACKAGE 1A
ROADWAY
TYPICAL SECTION
MOTEL, JENNIFER, KATHRYN & BARSTOW

CONTRACT NO.

DRAWING NO. CV-R3011-GSB

SCALE AS SHOWN

SHEET NO.

sleong 11/16/2012 12:28:15 PM CAHSRP-R1.TBL CHSR_half_black-pdf995.pt N:\Documents and Settings\sleong\My Documents\NDMProj\356751 - California High Speed Rail - SR99 Improvements\1S-CV-R3011-GSB.dgn

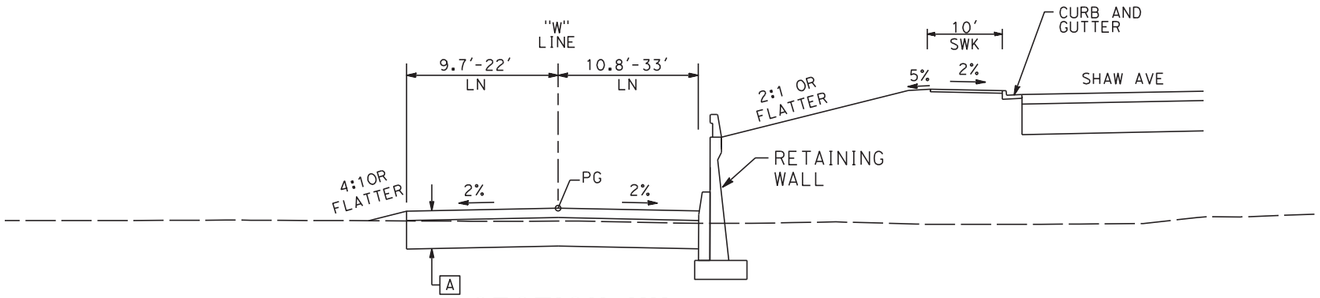

SECTION VV

"W" 10+50 TO 15+30

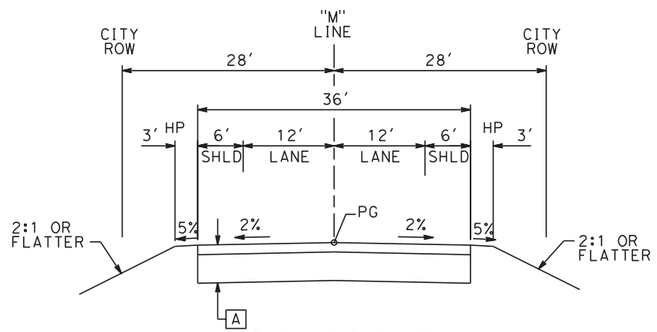

SECTION XX

"M" 11+75 TO 13+62

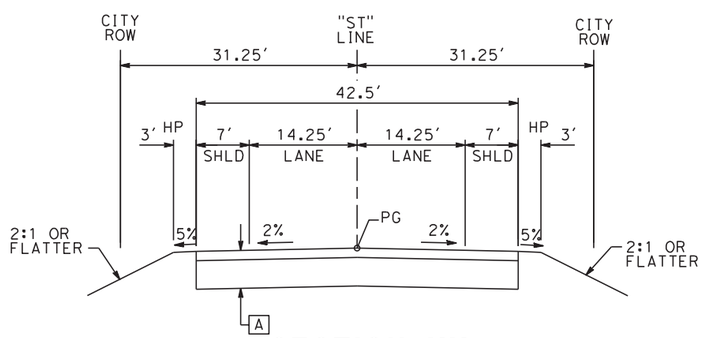

SECTION YY

"ST" 10+05 TO 11+67

NOTES:

A 0.40' HMA OVER 1.15' AB

B 0.55' HMA OVER 1.45' AB

10 0 10 20

1"=10'

SCALE APPLICABLE FOR FULL SIZE ONLY

REV	DATE	BY	CHK	APP	DESCRIPTION

DESIGNED BY V. CHIO
DRAWN BY D. ELKINS
CHECKED BY L. HEUSTON
IN CHARGE F. NOBARI
DATE 11/22/11

PROPOSED PRELIMINARY DESIGN

NOT FOR CONSTRUCTION

AECOM Technical Services, Inc.
2020 L Street, Suite 300
Sacramento, CA 95811

CH2MHILL

CALIFORNIA HIGH-SPEED RAIL AUTHORITY

CALIFORNIA HIGH-SPEED TRAIN PROJECT
SIERRA SUBDIVISION
PACKAGE 1A
ROADWAY
TYPICAL SECTION
WEBER, MARKET & STATE

CONTRACT NO.

DRAWING NO. CV-R3012-GSB

SCALE AS SHOWN

SHEET NO.

11/16/2011 11:09:00 AM CAHSRP-R1.TBL CHSR_half_black-pdf995.pnt C:\Documents and Settings\sleong\My Documents\NDMProj\356751 - California High Speed Rail - SR99 Improvements\1S-CV-R3012-GSB.dgn
sleong

LEGEND:

- STAGE 1 CONSTRUCTION
- PREVIOUS CONSTRUCTION
- TEMPORARY PAVEMENT
- DIRECTION OF TRAFFIC
- K-RAIL
- CRASH CUSHION

NOTES:

1. ROW SHOWN REPRESENTS THE MINIMUM ANTICIPATED ROW REQUIREMENTS. ACCURATE ROW AND ACCESS DATA WILL BE MADE AVAILABLE PRIOR TO AWARD.
2. CONSTRUCT THE REALIGNED GOLDEN STATE BLVD OUTSIDE THE EXISTING ROADWAY WHILE MAINTAINING TRAFFIC ON THE EXISTING ROADWAY.
3. CONSTRUCT VETERANS BLVD, BULLARD AVE EXTENSION AND THE VETERANS BLVD OVERCROSSING.
4. ALL DRIVEWAYS AND ACCESS ROADS TO GOLDEN STATE BLVD TO REMAIN OPEN DURING THIS STAGE.
5. CONSTRUCT TEMPORARY PAVEMENT ON THE NORTH SIDE OF SHAW AVE AND MODIFY EXISTING AT-GRADE RAILROAD CROSSING. MAINTAIN ACCESS TO THE EXISTING DRIVEWAYS ALONG SHAW AVE.
6. PROVIDE TEMPORARY ACCESS ROAD TO THE EXISTING W BULLARD AVE WEST OF UPRR.
7. MAINTAIN ACCESS TO ALL ADJACENT PROPERTIES ON CORNELIA AVE AND SANTA ANA AVE DURING CONSTRUCTION.
8. THE INTERSECTION OF SHAW AND CORNELIA AVE WILL BE TEMPORARILY CLOSED DURING CONSTRUCTION AT THE INTERSECTION.

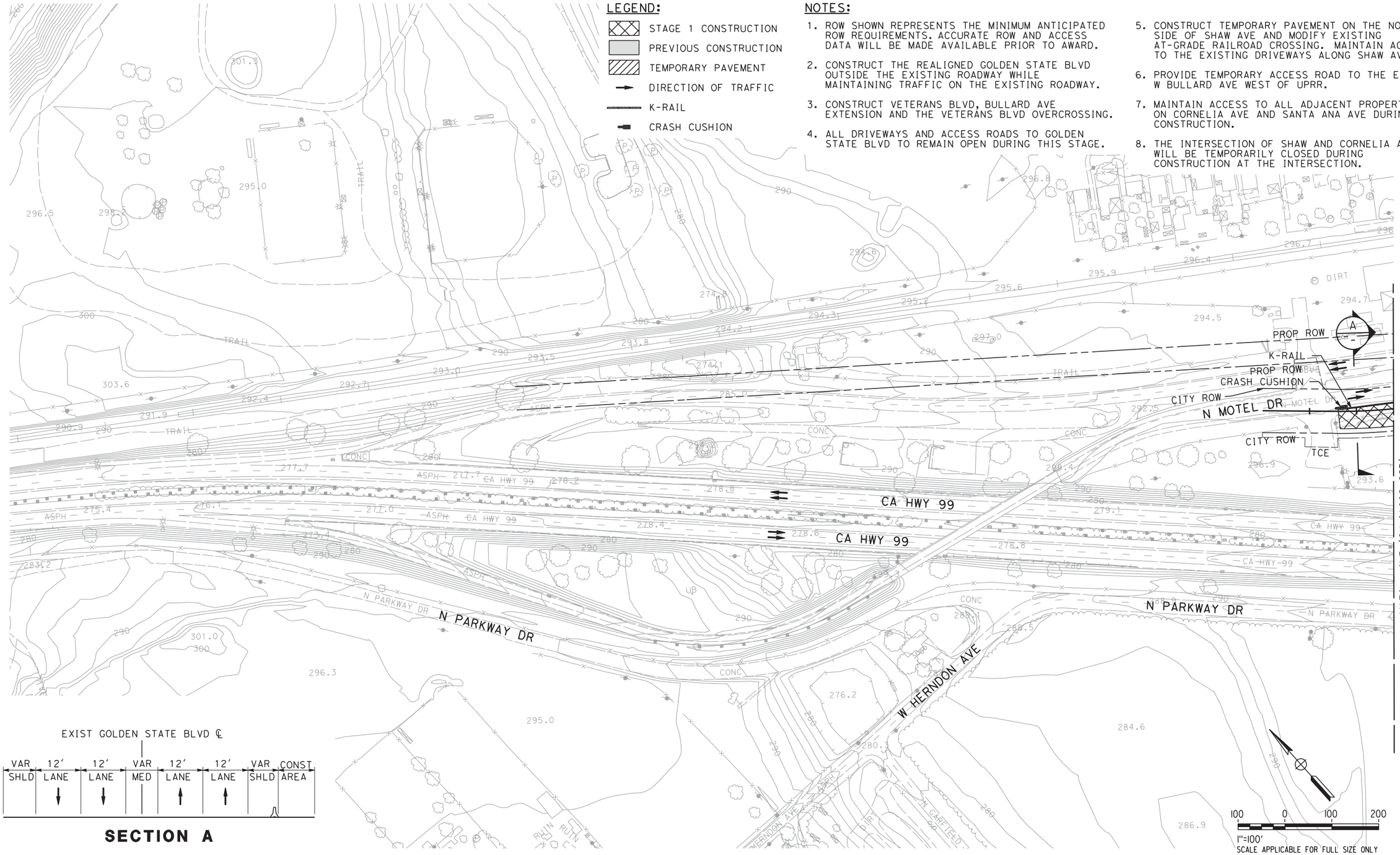

SECTION A

REV	DATE	BY	CHK	APP	DESCRIPTION

DESIGNED BY V. CHIO
DRAWN BY R. MUNOZ
CHECKED BY L. HEUSTON
IN CHARGE F. NOBARI
DATE 11/22/11

PROPOSED PRELIMINARY DESIGN

NOT FOR CONSTRUCTION

AECOM Technical Services, Inc.
2020 L Street, Suite 300
Sacramento, CA 95811
CH2MHILL

CALIFORNIA HIGH-SPEED RAIL AUTHORITY

CALIFORNIA HIGH-SPEED TRAIN PROJECT
SIERRA SUBDIVISION
PACKAGE 1A
CONSTRUCTION STAGING
STAGE 1
GOLDEN STATE BOULEVARD

CONTRACT NO.
DRAWING NO. CV-11001-GSB
SCALE AS SHOWN
SHEET NO.

sleong 11/16/2011 4:40:03 PM CAHSRP-R1.TBL CHSR_half_black-pdf995 C:\Documents and Settings\sleong\My Documents\NDMProj\356751 - California High Speed Rail - SR99 Improvements\1S-CV-11001-GSB.dgn
11/16/2011 4:40:04 PM

LEGEND:

- STAGE 1 CONSTRUCTION
- PREVIOUS CONSTRUCTION
- TEMPORARY PAVEMENT
- DIRECTION OF TRAFFIC
- K-RAIL
- CRASH CUSHION

NOTES:

1. ROW SHOWN REPRESENTS THE MINIMUM ANTICIPATED ROW REQUIREMENTS. ACCURATE ROW AND ACCESS DATA WILL BE MADE AVAILABLE PRIOR TO AWARD.
2. CONSTRUCT THE REALIGNED GOLDEN STATE BLVD OUTSIDE THE EXISTING ROADWAY WHILE MAINTAINING TRAFFIC ON THE EXISTING ROADWAY.
3. CONSTRUCT VETERANS BLVD, BULLARD AVE EXTENSION AND THE VETERANS BLVD OVERCROSSING.
4. ALL DRIVEWAYS AND ACCESS ROADS TO GOLDEN STATE BLVD TO REMAIN OPEN DURING THIS STAGE.
5. CONSTRUCT TEMPORARY PAVEMENT ON THE NORTH SIDE OF SHAW AVE AND MODIFY EXISTING AT-GRADE RAILROAD CROSSING. MAINTAIN ACCESS TO THE EXISTING DRIVEWAYS ALONG SHAW AVE.
6. PROVIDE TEMPORARY ACCESS ROAD TO THE EXISTING W BULLARD AVE WEST OF UPRR.
7. MAINTAIN ACCESS TO ALL ADJACENT PROPERTIES ON CORNELIA AVE AND SANTA ANA AVE DURING CONSTRUCTION.
8. THE INTERSECTION OF SHAW AND CORNELIA AVE WILL BE TEMPORARILY CLOSED DURING CONSTRUCTION AT THE INTERSECTION.

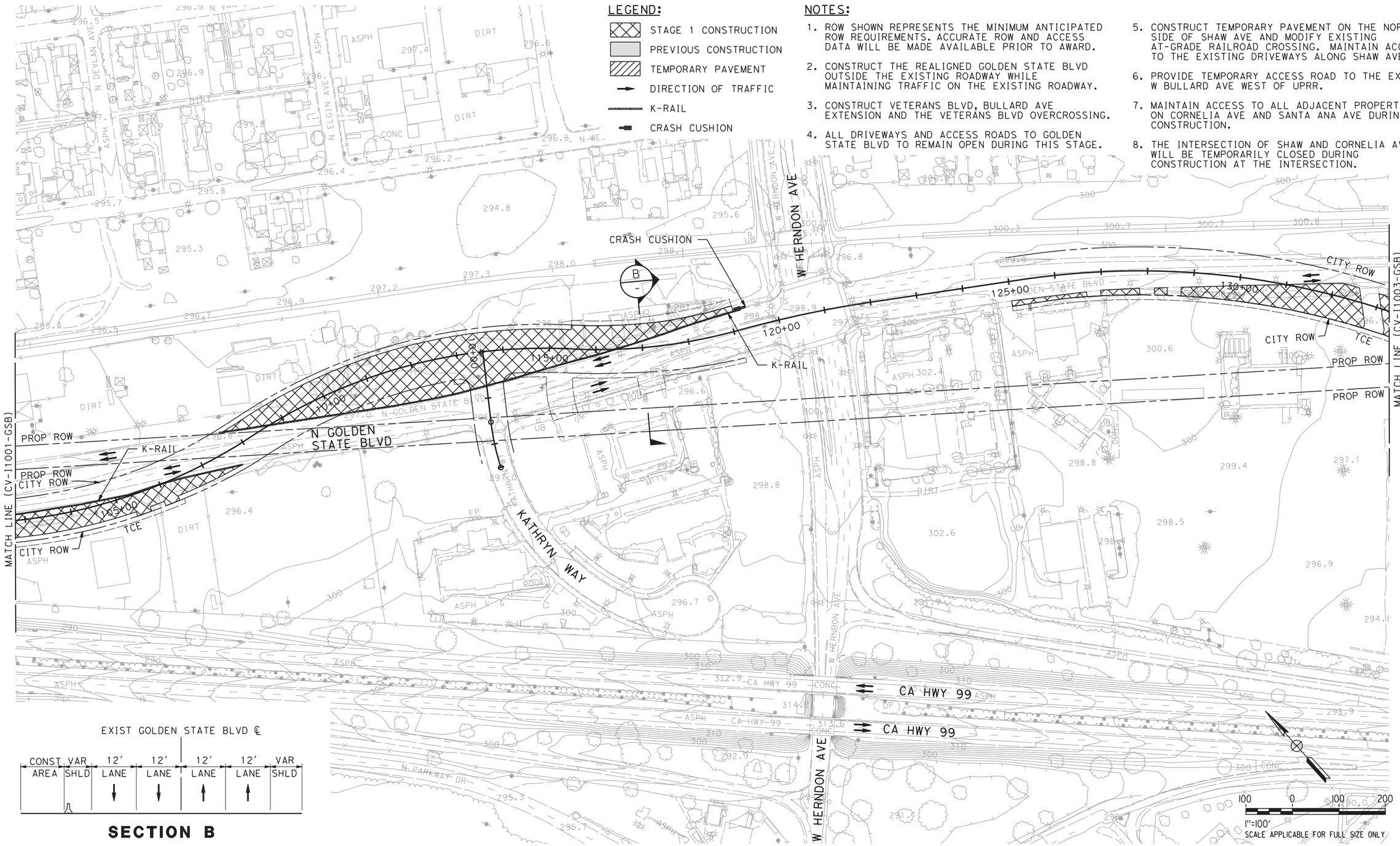

EXIST GOLDEN STATE BLVD ℄

CONST AREA	VAR SHLD	12' LANE	12' LANE	12' LANE	12' LANE	VAR SHLD

SECTION B

REV	DATE	BY	CHK	APP	DESCRIPTION

DESIGNED BY V. CHIO
DRAWN BY R. MUNOZ
CHECKED BY L. HEUSTON
IN CHARGE F. NOBARI
DATE 11/22/11

PROPOSED PRELIMINARY DESIGN

NOT FOR CONSTRUCTION

AECOM Technical Services, Inc.
2020 L Street, Suite 300
Sacramento, CA 95811
CH2MHILL

CALIFORNIA HIGH-SPEED RAIL AUTHORITY

CALIFORNIA HIGH-SPEED TRAIN PROJECT
SIERRA SUBDIVISION
PACKAGE 1A
CONSTRUCTION STAGING
STAGE 1
GOLDEN STATE BOULEVARD

CONTRACT NO.
DRAWING NO. CV-I1002-GSB
SCALE AS SHOWN
SHEET NO.

sleong 11/16/2011 4:40:06 PM CAHSRP-R1.TBL CHSR_half_black-pdf995.pdf C:\Documents and Settings\sleong\My Documents\NDMProj\356751 - California High Speed Rail - SR99 Improvements\1S-CV-I1002-GSB.dgn

LEGEND:

- STAGE 1 CONSTRUCTION
- PREVIOUS CONSTRUCTION
- TEMPORARY PAVEMENT
- DIRECTION OF TRAFFIC
- K-RAIL
- CRASH CUSHION

NOTES:

1. ROW SHOWN REPRESENTS THE MINIMUM ANTICIPATED ROW REQUIREMENTS. ACCURATE ROW AND ACCESS DATA WILL BE MADE AVAILABLE PRIOR TO AWARD.
2. CONSTRUCT THE REALIGNED GOLDEN STATE BLVD OUTSIDE THE EXISTING ROADWAY WHILE MAINTAINING TRAFFIC ON THE EXISTING ROADWAY.
3. CONSTRUCT VETERANS BLVD, BULLARD AVE EXTENSION AND THE VETERANS BLVD OVERCROSSING.
4. ALL DRIVEWAYS AND ACCESS ROADS TO GOLDEN STATE BLVD TO REMAIN OPEN DURING THIS STAGE.
5. CONSTRUCT TEMPORARY PAVEMENT ON THE NORTH SIDE OF SHAW AVE AND MODIFY EXISTING AT-GRADE RAILROAD CROSSING. MAINTAIN ACCESS TO THE EXISTING DRIVEWAYS ALONG SHAW AVE.
6. PROVIDE TEMPORARY ACCESS ROAD TO THE EXISTING W BULLARD AVE WEST OF UPRR.
7. MAINTAIN ACCESS TO ALL ADJACENT PROPERTIES ON CORNELIA AVE AND SANTA ANA AVE DURING CONSTRUCTION.
8. THE INTERSECTION OF SHAW AND CORNELIA AVE WILL BE TEMPORARILY CLOSED DURING CONSTRUCTION AT THE INTERSECTION.

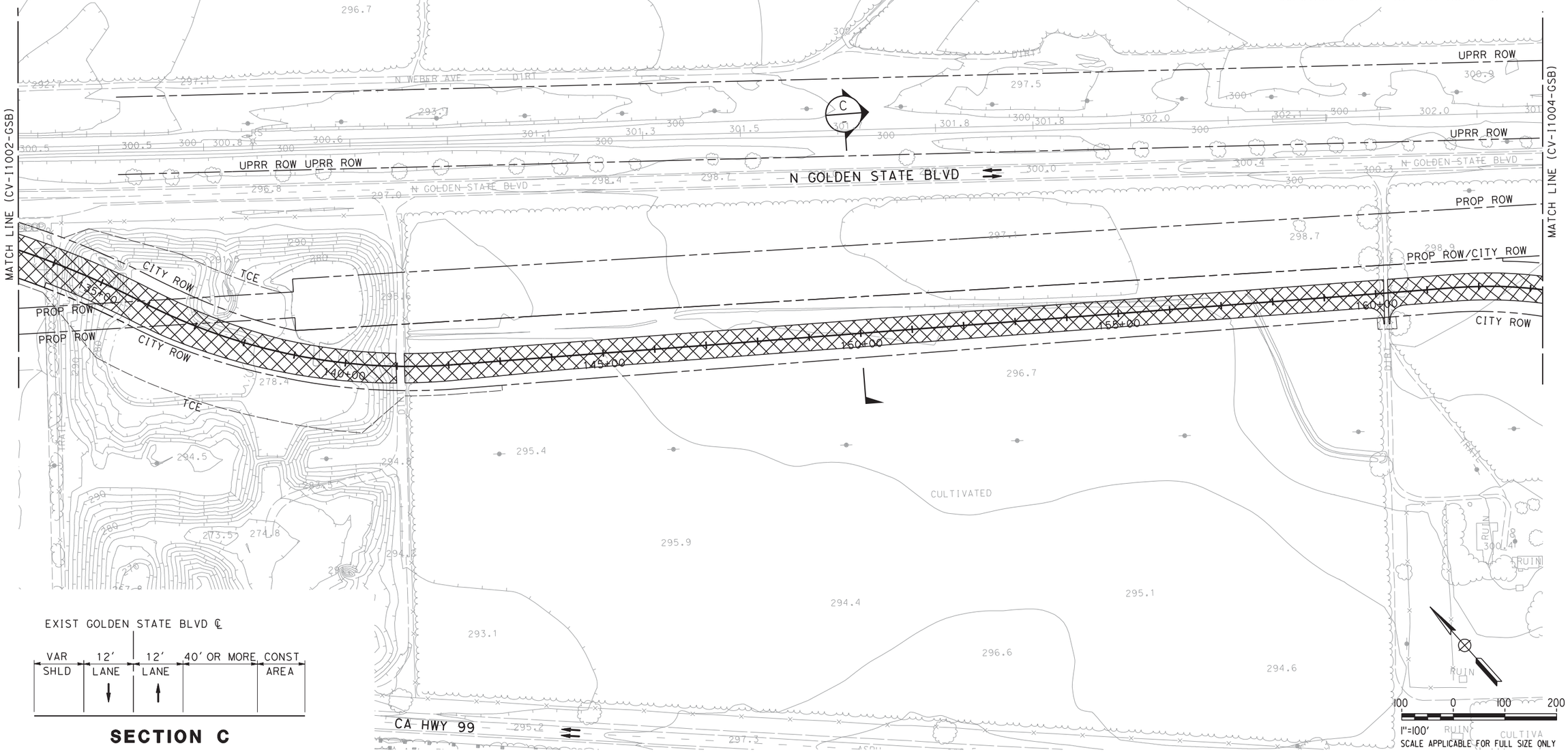

SECTION C

REV	DATE	BY	CHK	APP	DESCRIPTION

DESIGNED BY V. CHIO
DRAWN BY R. MUNOZ
CHECKED BY L. HEUSTON
IN CHARGE F. NOBARI
DATE 11/22/11

PROPOSED PRELIMINARY DESIGN

NOT FOR CONSTRUCTION

AECOM Technical Services, Inc.
2020 L Street, Suite 300
Sacramento, CA 95811
CH2MHILL

CALIFORNIA HIGH-SPEED RAIL AUTHORITY

CALIFORNIA HIGH-SPEED TRAIN PROJECT
SIERRA SUBDIVISION
PACKAGE 1A
CONSTRUCTION STAGING
STAGE 1
GOLDEN STATE BOULEVARD

CONTRACT NO.
DRAWING NO. CV-I1003-GSB
SCALE AS SHOWN
SHEET NO.

11/16/2011 4:40:08 PM CAHSRP-R1.TBL CHSR_half_black-pdf995.pc*Documents and Settings\sleong\My Documents\NDMProj\356751 - California High Speed Rail - SR99 Improvements\1S-CV-I1003-GSB.dgn
sleong

LEGEND:

- STAGE 1 CONSTRUCTION
- PREVIOUS CONSTRUCTION
- TEMPORARY PAVEMENT
- DIRECTION OF TRAFFIC
- K-RAIL
- CRASH CUSHION

NOTES:

1. ROW SHOWN REPRESENTS THE MINIMUM ANTICIPATED ROW REQUIREMENTS. ACCURATE ROW AND ACCESS DATA WILL BE MADE AVAILABLE PRIOR TO AWARD.
2. CONSTRUCT THE REALIGNED GOLDEN STATE BLVD OUTSIDE THE EXISTING ROADWAY WHILE MAINTAINING TRAFFIC ON THE EXISTING ROADWAY.
3. CONSTRUCT VETERANS BLVD, BULLARD AVE EXTENSION AND THE VETERANS BLVD OVERCROSSING.
4. ALL DRIVEWAYS AND ACCESS ROADS TO GOLDEN STATE BLVD TO REMAIN OPEN DURING THIS STAGE.
5. CONSTRUCT TEMPORARY PAVEMENT ON THE NORTH SIDE OF SHAW AVE AND MODIFY EXISTING AT-GRADE RAILROAD CROSSING. MAINTAIN ACCESS TO THE EXISTING DRIVEWAYS ALONG SHAW AVE.
6. PROVIDE TEMPORARY ACCESS ROAD TO THE EXISTING W BULLARD AVE WEST OF UPRR.
7. MAINTAIN ACCESS TO ALL ADJACENT PROPERTIES ON CORNELIA AVE AND SANTA ANA AVE DURING CONSTRUCTION.
8. THE INTERSECTION OF SHAW AND CORNELIA AVE WILL BE TEMPORARILY CLOSED DURING CONSTRUCTION AT THE INTERSECTION.

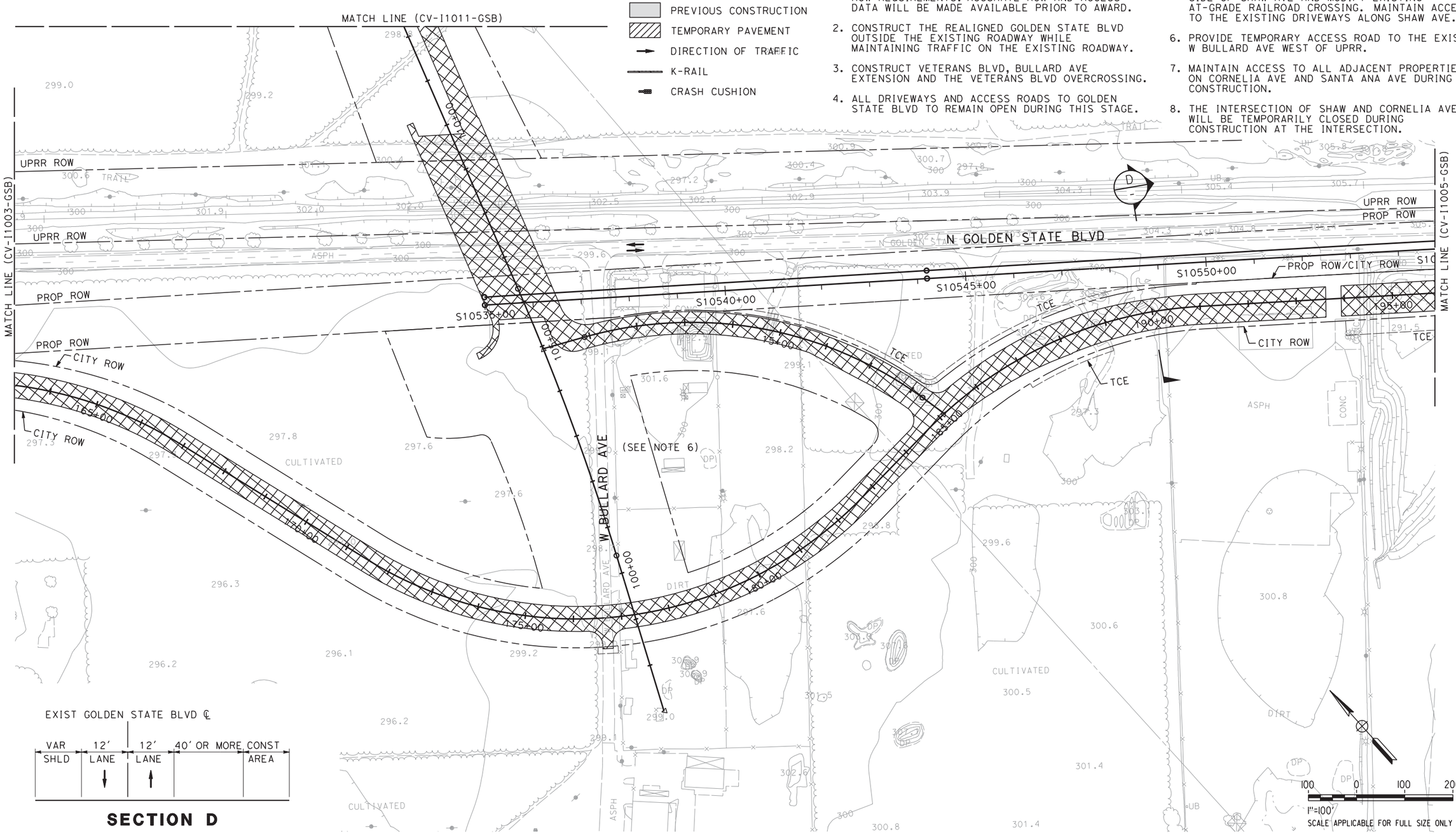

REV	DATE	BY	CHK	APP	DESCRIPTION

DESIGNED BY V. CHIO
DRAWN BY R. MUNOZ
CHECKED BY L. HEUSTON
IN CHARGE F. NOBARI
DATE 12/08/11

PROPOSED PRELIMINARY DESIGN

NOT FOR CONSTRUCTION

AECOM Technical Services, Inc.
2020 L Street, Suite 300
Sacramento, CA 95811

CH2MHILL

CALIFORNIA HIGH-SPEED RAIL AUTHORITY

CALIFORNIA HIGH-SPEED TRAIN PROJECT
SIERRA SUBDIVISION
PACKAGE 1A
CONSTRUCTION STAGING
STAGE 1
GOLDEN STATE BOULEVARD

CONTRACT NO.
DRAWING NO. CV-I1004-GSB
SCALE AS SHOWN
SHEET NO.

sleong 12/5/2011 6:53:00 PM CAHSRP-R1.TBL CHSR_half_black-pdf995.pt N:\Documents and Settings\sleong\My Documents\NDMProj\356751 - California High Speed Rail - SR99 Improvements\1S-CV-I1004-GSB.dgn

LEGEND:

- STAGE 1 CONSTRUCTION
- PREVIOUS CONSTRUCTION
- TEMPORARY PAVEMENT
- DIRECTION OF TRAFFIC
- K-RAIL
- CRASH CUSHION

NOTES:

1. ROW SHOWN REPRESENTS THE MINIMUM ANTICIPATED ROW REQUIREMENTS. ACCURATE ROW AND ACCESS DATA WILL BE MADE AVAILABLE PRIOR TO AWARD.
2. CONSTRUCT THE REALIGNED GOLDEN STATE BLVD OUTSIDE THE EXISTING ROADWAY WHILE MAINTAINING TRAFFIC ON THE EXISTING ROADWAY.
3. CONSTRUCT VETERANS BLVD, BULLARD AVE EXTENSION AND THE VETERANS BLVD OVERCROSSING.
4. ALL DRIVEWAYS AND ACCESS ROADS TO GOLDEN STATE BLVD TO REMAIN OPEN DURING THIS STAGE.
5. CONSTRUCT TEMPORARY PAVEMENT ON THE NORTH SIDE OF SHAW AVE AND MODIFY EXISTING AT-GRADE RAILROAD CROSSING. MAINTAIN ACCESS TO THE EXISTING DRIVEWAYS ALONG SHAW AVE.
6. PROVIDE TEMPORARY ACCESS ROAD TO THE EXISTING W BULLARD AVE WEST OF UPRR.
7. MAINTAIN ACCESS TO ALL ADJACENT PROPERTIES ON CORNELIA AVE AND SANTA ANA AVE DURING CONSTRUCTION.
8. THE INTERSECTION OF SHAW AND CORNELIA AVE WILL BE TEMPORARILY CLOSED DURING CONSTRUCTION AT THE INTERSECTION.

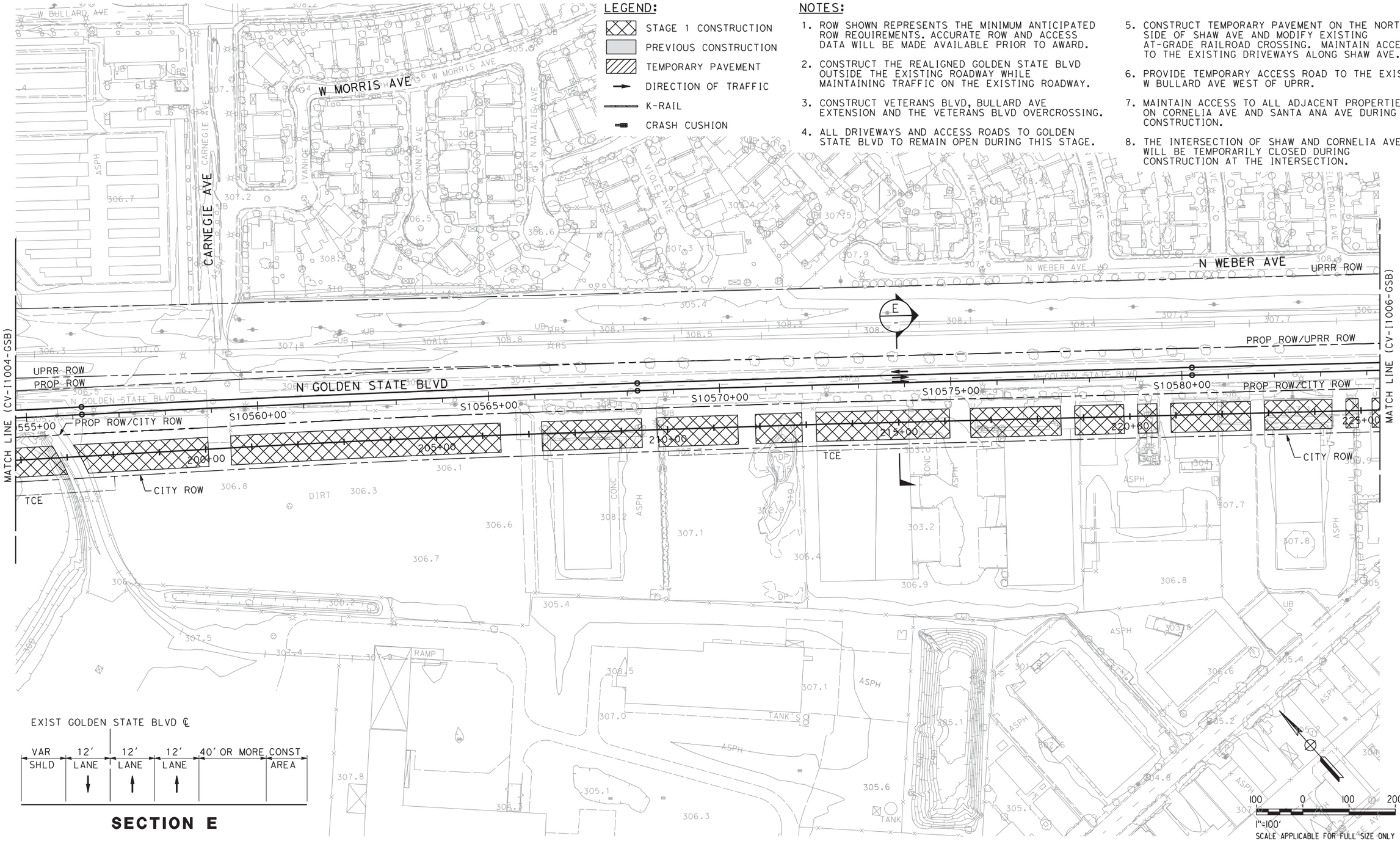

REV	DATE	BY	CHK	APP	DESCRIPTION

DESIGNED BY V. CHIO
DRAWN BY R. MUNOZ
CHECKED BY L. HEUSTON
IN CHARGE F. NOBARI
DATE 11/22/11

PROPOSED PRELIMINARY DESIGN

NOT FOR CONSTRUCTION

AECOM Technical Services, Inc.
2020 L Street, Suite 300
Sacramento, CA 95811
CH2MHILL

CALIFORNIA HIGH-SPEED RAIL AUTHORITY

CALIFORNIA HIGH-SPEED TRAIN PROJECT
SIERRA SUBDIVISION
PACKAGE 1A
CONSTRUCTION STAGING
STAGE 1
GOLDEN STATE BOULEVARD

CONTRACT NO.
DRAWING NO. CV-I1005-GSB
SCALE AS SHOWN
SHEET NO.

sleong 11/16/2011 4:40:12 PM CAHSRP-R1.TBL CHSR_half_black-pdf995.pen Documents and Settings\sleong\My Documents\NDMProj\356751 - California High Speed Rail - SR99 Improvements\1S-CV-I1005-GSB.dgn

LEGEND:

- STAGE 1 CONSTRUCTION
- PREVIOUS CONSTRUCTION
- TEMPORARY PAVEMENT
- DIRECTION OF TRAFFIC
- K-RAIL
- CRASH CUSHION

NOTES:

1. ROW SHOWN REPRESENTS THE MINIMUM ANTICIPATED ROW REQUIREMENTS. ACCURATE ROW AND ACCESS DATA WILL BE MADE AVAILABLE PRIOR TO AWARD.
2. CONSTRUCT THE REALIGNED GOLDEN STATE BLVD OUTSIDE THE EXISTING ROADWAY WHILE MAINTAINING TRAFFIC ON THE EXISTING ROADWAY.
3. CONSTRUCT VETERANS BLVD, BULLARD AVE EXTENSION AND THE VETERANS BLVD OVERCROSSING.
4. ALL DRIVEWAYS AND ACCESS ROADS TO GOLDEN STATE BLVD TO REMAIN OPEN DURING THIS STAGE.
5. CONSTRUCT TEMPORARY PAVEMENT ON THE NORTH SIDE OF SHAW AVE AND MODIFY EXISTING AT-GRADE RAILROAD CROSSING. MAINTAIN ACCESS TO THE EXISTING DRIVEWAYS ALONG SHAW AVE.
6. PROVIDE TEMPORARY ACCESS ROAD TO THE EXISTING W BULLARD AVE WEST OF UPRR.
7. MAINTAIN ACCESS TO ALL ADJACENT PROPERTIES ON CORNELIA AVE AND SANTA ANA AVE DURING CONSTRUCTION.
8. THE INTERSECTION OF SHAW AND CORNELIA AVE WILL BE TEMPORARILY CLOSED DURING CONSTRUCTION AT THE INTERSECTION.

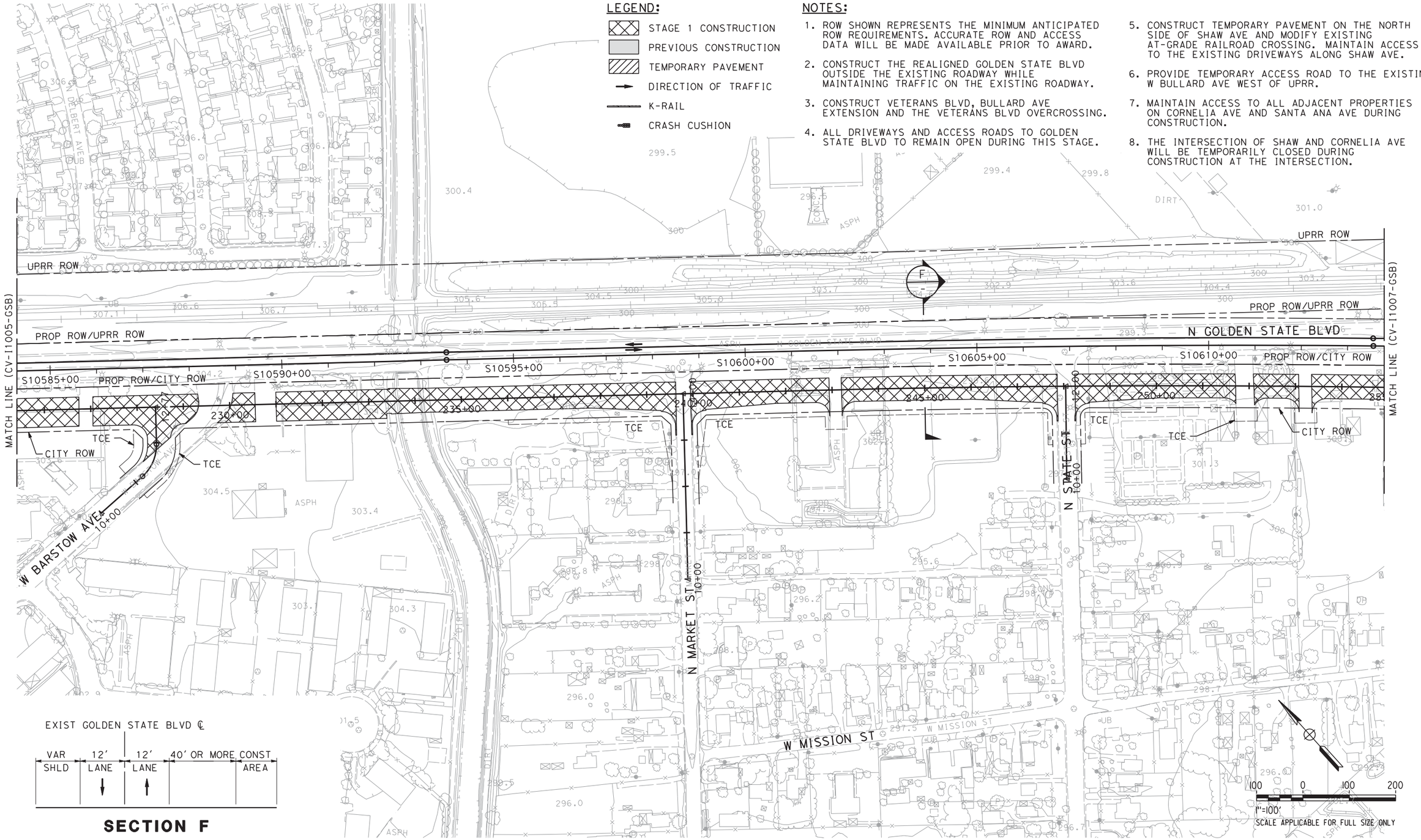

REV	DATE	BY	CHK	APP	DESCRIPTION

DESIGNED BY V. CHIO
DRAWN BY R. MUNOZ
CHECKED BY L. HEUSTON
IN CHARGE F. NOBARI
DATE 11/22/11

PROPOSED PRELIMINARY DESIGN

NOT FOR CONSTRUCTION

AECOM Technical Services, Inc.
2020 L Street, Suite 300
Sacramento, CA 95811
CH2MHILL

CALIFORNIA HIGH-SPEED RAIL AUTHORITY

CALIFORNIA HIGH-SPEED TRAIN PROJECT
SIERRA SUBDIVISION
PACKAGE 1A
CONSTRUCTION STAGING
STAGE 1
GOLDEN STATE BOULEVARD

CONTRACT NO.
DRAWING NO. CV-I1006-GSB
SCALE AS SHOWN
SHEET NO.

sleong 11/16/2014:40:15 PM CAHSRP-R1.TBL CHSR_half_black-pdf995.pc3 C:\Documents and Settings\sleong\My Documents\NDMProj\356751 - California High Speed Rail - SR99 Improvements\1S-CV-I1006-GSB.dgn

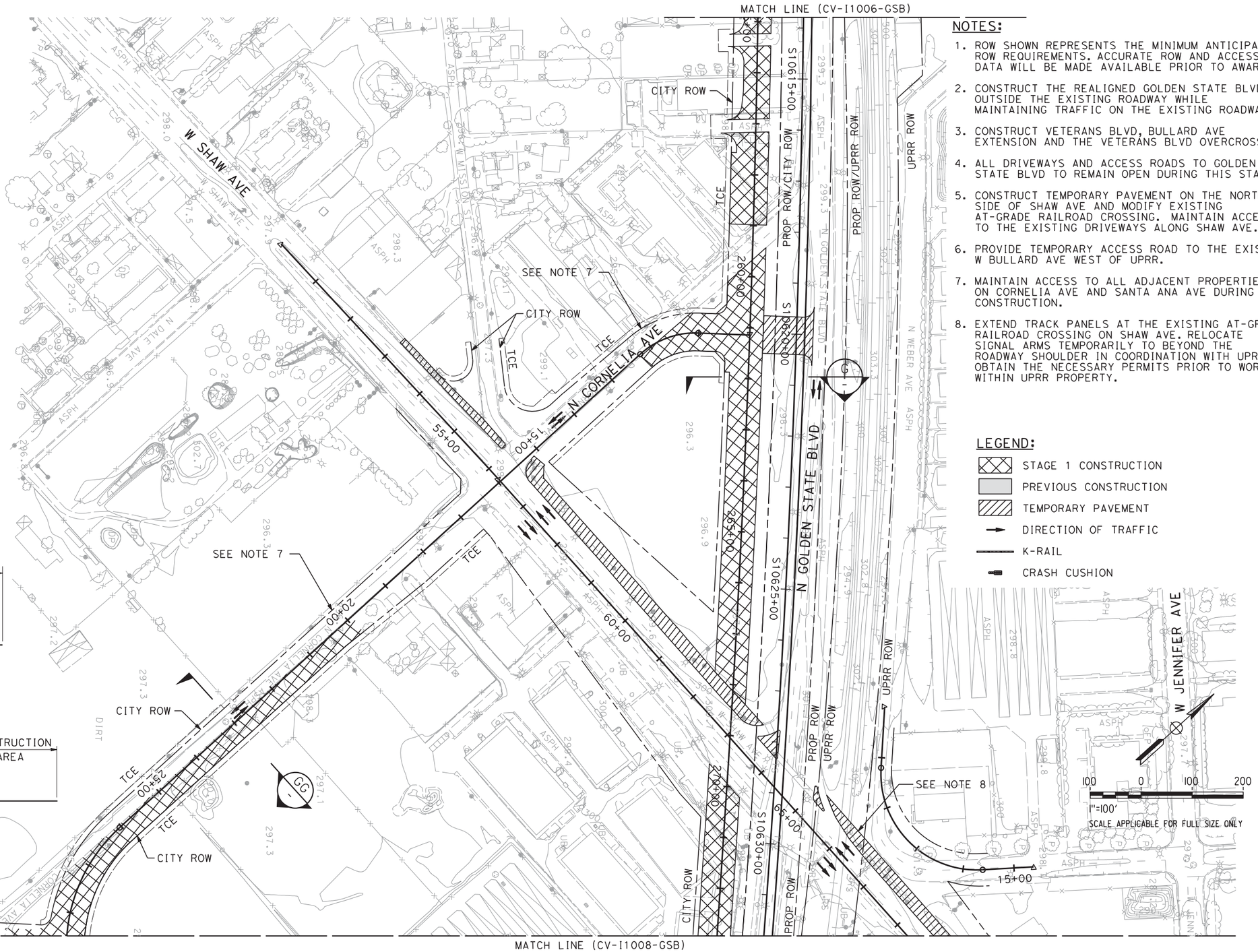

NOTES:

1. ROW SHOWN REPRESENTS THE MINIMUM ANTICIPATED ROW REQUIREMENTS. ACCURATE ROW AND ACCESS DATA WILL BE MADE AVAILABLE PRIOR TO AWARD.
2. CONSTRUCT THE REALIGNED GOLDEN STATE BLVD OUTSIDE THE EXISTING ROADWAY WHILE MAINTAINING TRAFFIC ON THE EXISTING ROADWAY.
3. CONSTRUCT VETERANS BLVD, BULLARD AVE EXTENSION AND THE VETERANS BLVD OVERCROSSING.
4. ALL DRIVEWAYS AND ACCESS ROADS TO GOLDEN STATE BLVD TO REMAIN OPEN DURING THIS STAGE.
5. CONSTRUCT TEMPORARY PAVEMENT ON THE NORTH SIDE OF SHAW AVE AND MODIFY EXISTING AT-GRADE RAILROAD CROSSING. MAINTAIN ACCESS TO THE EXISTING DRIVEWAYS ALONG SHAW AVE.
6. PROVIDE TEMPORARY ACCESS ROAD TO THE EXISTING W BULLARD AVE WEST OF UPRR.
7. MAINTAIN ACCESS TO ALL ADJACENT PROPERTIES ON CORNELIA AVE AND SANTA ANA AVE DURING CONSTRUCTION.
8. EXTEND TRACK PANELS AT THE EXISTING AT-GRADE RAILROAD CROSSING ON SHAW AVE. RELOCATE SIGNAL ARMS TEMPORARILY TO BEYOND THE ROADWAY SHOULDER IN COORDINATION WITH UPRR. OBTAIN THE NECESSARY PERMITS PRIOR TO WORK WITHIN UPRR PROPERTY.

LEGEND:

- STAGE 1 CONSTRUCTION
- PREVIOUS CONSTRUCTION
- TEMPORARY PAVEMENT
- DIRECTION OF TRAFFIC
- K-RAIL
- CRASH CUSHION

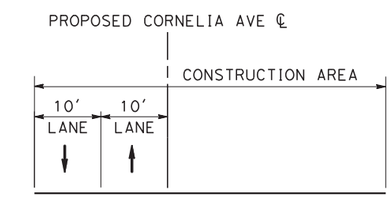

SECTION GG

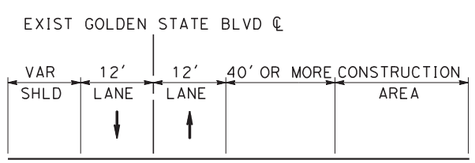

SECTION G

100 0 100 200

1"=100'

SCALE APPLICABLE FOR FULL SIZE ONLY

REV	DATE	BY	CHK	APP	DESCRIPTION

DESIGNED BY V. CHIO
DRAWN BY R. MUNOZ
CHECKED BY L. HEUSTON
IN CHARGE F. NOBARI
DATE 2/17/12

PROPOSED PRELIMINARY DESIGN

NOT FOR CONSTRUCTION

AECOM Technical Services, Inc.
2020 L Street, Suite 300
Sacramento, CA 95811

CH2MHILL

CALIFORNIA HIGH-SPEED RAIL AUTHORITY

CALIFORNIA HIGH-SPEED TRAIN PROJECT
SIERRA SUBDIVISION
PACKAGE 1A
CONSTRUCTION STAGING
STAGE 1
GOLDEN STATE BOULEVARD

CONTRACT NO.
DRAWING NO. CV-I1007-GSB
SCALE AS SHOWN
SHEET NO.

sleong 2/16/2012 6:49:03 PM CAHSRP-R1.TBL CHSR_half_black-pdf995.pc3 C:\Documents and Settings\sleong\My Documents\NDMProj\356751 - California High Speed Rail - SR99 Improvements\1S-CV-I1007-GSB_REVISED.dgn

sleong 12/6/2011 10:27:48 AM CAHSRP-R1.TBL CHSR_half_black-pdf995.pc$ C:\Documents and Settings\sleong\My Documents\NDMProj\356751 - California High Speed Rail - SR99 Improvements\1S-CV-I1008-GSB.dgn

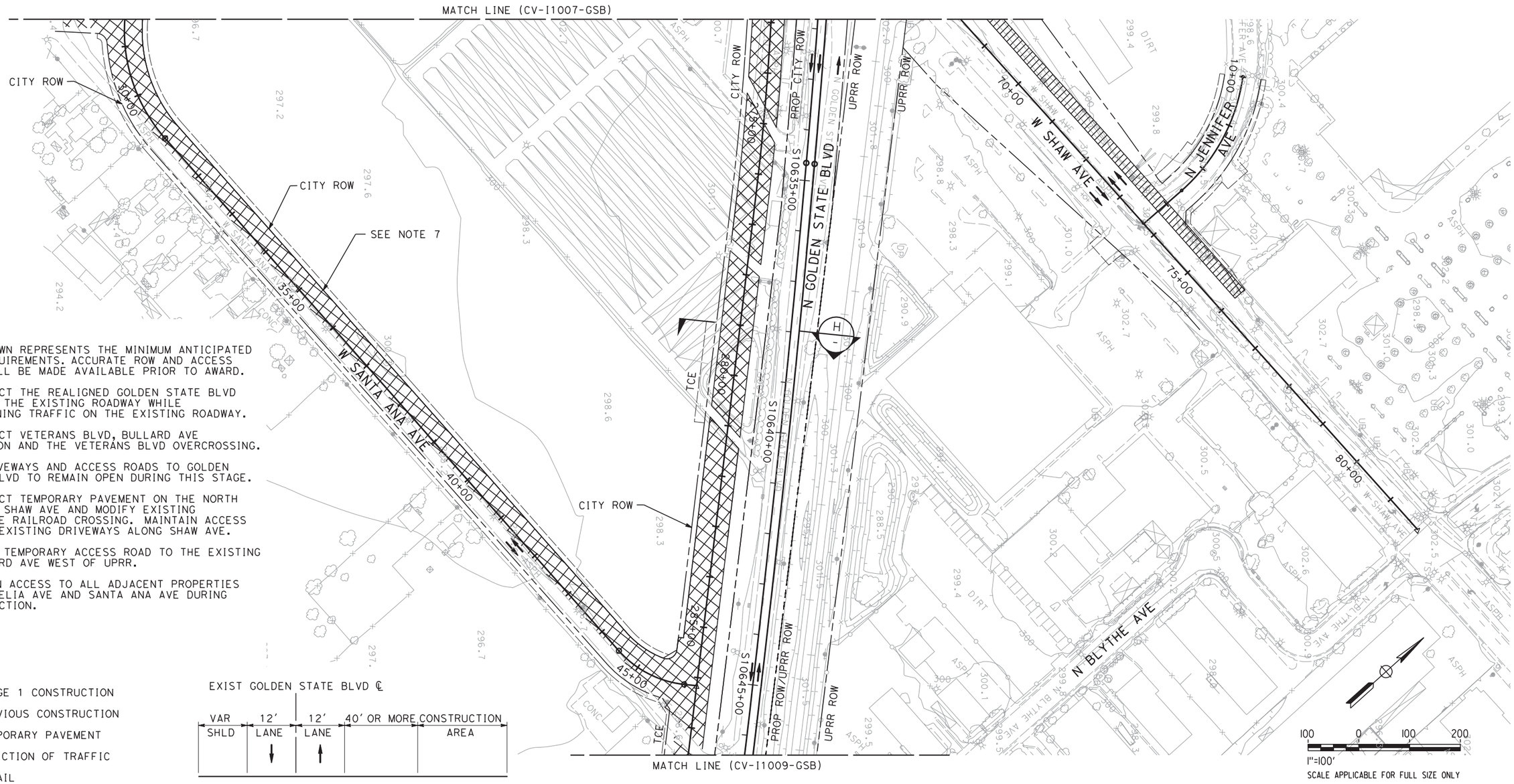

NOTES:

1. ROW SHOWN REPRESENTS THE MINIMUM ANTICIPATED ROW REQUIREMENTS. ACCURATE ROW AND ACCESS DATA WILL BE MADE AVAILABLE PRIOR TO AWARD.
2. CONSTRUCT THE REALIGNED GOLDEN STATE BLVD OUTSIDE THE EXISTING ROADWAY WHILE MAINTAINING TRAFFIC ON THE EXISTING ROADWAY.
3. CONSTRUCT VETERANS BLVD, BULLARD AVE EXTENSION AND THE VETERANS BLVD OVERCROSSING.
4. ALL DRIVEWAYS AND ACCESS ROADS TO GOLDEN STATE BLVD TO REMAIN OPEN DURING THIS STAGE.
5. CONSTRUCT TEMPORARY PAVEMENT ON THE NORTH SIDE OF SHAW AVE AND MODIFY EXISTING AT-GRADE RAILROAD CROSSING. MAINTAIN ACCESS TO THE EXISTING DRIVEWAYS ALONG SHAW AVE.
6. PROVIDE TEMPORARY ACCESS ROAD TO THE EXISTING W BULLARD AVE WEST OF UPRR.
7. MAINTAIN ACCESS TO ALL ADJACENT PROPERTIES ON CORNELIA AVE AND SANTA ANA AVE DURING CONSTRUCTION.

LEGEND:

- STAGE 1 CONSTRUCTION
- PREVIOUS CONSTRUCTION
- TEMPORARY PAVEMENT
- DIRECTION OF TRAFFIC
- K-RAIL
- CRASH CUSHION

EXIST GOLDEN STATE BLVD ℄

VAR SHLD	12' LANE	12' LANE	40' OR MORE	CONSTRUCTION AREA

SECTION H

REV	DATE	BY	CHK	APP	DESCRIPTION

DESIGNED BY V. CHIO
DRAWN BY R. MUNOZ
CHECKED BY L. HEUSTON
IN CHARGE F. NOBARI
DATE 12/08/11

PROPOSED PRELIMINARY DESIGN

NOT FOR CONSTRUCTION

AECOM Technical Services, Inc.
2020 L Street, Suite 300
Sacramento, CA 95811

CH2MHILL

CALIFORNIA HIGH-SPEED RAIL AUTHORITY

CALIFORNIA HIGH-SPEED TRAIN PROJECT
SIERRA SUBDIVISION
PACKAGE 1A
CONSTRUCTION STAGING
STAGE 1
GOLDEN STATE BOULEVARD

CONTRACT NO.
DRAWING NO. CV-I1008-GSB
SCALE AS SHOWN
SHEET NO.

12/6/2011 10:27:48 AM

LEGEND:

- STAGE 1 CONSTRUCTION
- PREVIOUS CONSTRUCTION
- TEMPORARY PAVEMENT
- DIRECTION OF TRAFFIC
- K-RAIL
- CRASH CUSHION

NOTES:

1. ROW SHOWN REPRESENTS THE MINIMUM ANTICIPATED ROW REQUIREMENTS. ACCURATE ROW AND ACCESS DATA WILL BE MADE AVAILABLE PRIOR TO AWARD.
2. CONSTRUCT THE REALIGNED GOLDEN STATE BLVD OUTSIDE THE EXISTING ROADWAY WHILE MAINTAINING TRAFFIC ON THE EXISTING ROADWAY.
3. CONSTRUCT VETERANS BLVD, BULLARD AVE EXTENSION AND THE VETERANS BLVD OVERCROSSING.
4. ALL DRIVEWAYS AND ACCESS ROADS TO GOLDEN STATE BLVD TO REMAIN OPEN DURING THIS STAGE.
5. CONSTRUCT TEMPORARY PAVEMENT ON THE NORTH SIDE OF SHAW AVE AND MODIFY EXISTING AT-GRADE RAILROAD CROSSING. MAINTAIN ACCESS TO THE EXISTING DRIVEWAYS ALONG SHAW AVE.
6. PROVIDE TEMPORARY ACCESS ROAD TO THE EXISTING W BULLARD AVE WEST OF UPRR.
7. MAINTAIN ACCESS TO ALL ADJACENT PROPERTIES ON CORNELIA AVE AND SANTA ANA AVE DURING CONSTRUCTION.
8. THE INTERSECTION OF SHAW AND CORNELIA AVE WILL BE TEMPORARILY CLOSED DURING CONSTRUCTION AT THE INTERSECTION.

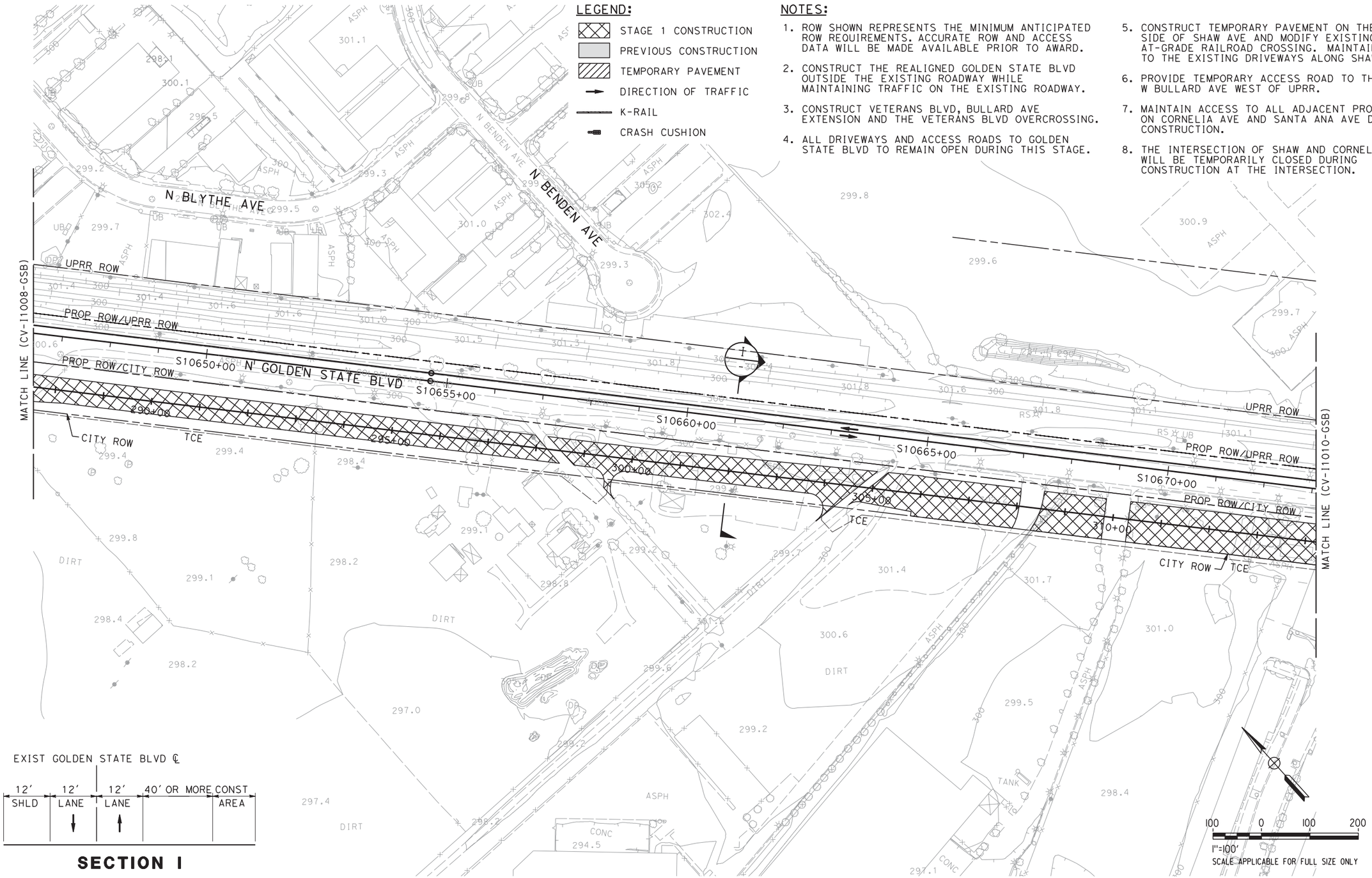

EXIST GOLDEN STATE BLVD ℄

12' SHLD	12' LANE	12' LANE	40' OR MORE CONST AREA

SECTION I

REV	DATE	BY	CHK	APP	DESCRIPTION

DESIGNED BY V. CHIO
DRAWN BY R. MUNOZ
CHECKED BY L. HEUSTON
IN CHARGE F. NOBARI
DATE 11/22/11

PROPOSED PRELIMINARY DESIGN

NOT FOR CONSTRUCTION

AECOM Technical Services, Inc.
2020 L Street, Suite 300
Sacramento, CA 95811
CH2MHILL

CALIFORNIA HIGH-SPEED RAIL AUTHORITY

CALIFORNIA HIGH-SPEED TRAIN PROJECT
SIERRA SUBDIVISION
PACKAGE 1A
CONSTRUCTION STAGING
STAGE 1
GOLDEN STATE BOULEVARD

CONTRACT NO.
DRAWING NO. CV-I1009-GSB
SCALE AS SHOWN
SHEET NO.

sleong 11/16/2011 4:40:20 PM CAHSRP-R1.TBL CHSR_half_black-pdf995.pt N:\Documents and Settings\sleong\My Documents\NDMProj\356751 - California High Speed Rail - SR99 Improvements\1S-CV-I1009-GSB.dgn

LEGEND:

- STAGE 1 CONSTRUCTION
- PREVIOUS CONSTRUCTION
- TEMPORARY PAVEMENT
- DIRECTION OF TRAFFIC
- K-RAIL
- CRASH CUSHION

NOTES:

1. ROW SHOWN REPRESENTS THE MINIMUM ANTICIPATED ROW REQUIREMENTS. ACCURATE ROW AND ACCESS DATA WILL BE MADE AVAILABLE PRIOR TO AWARD.
2. CONSTRUCT THE REALIGNED GOLDEN STATE BLVD OUTSIDE THE EXISTING ROADWAY WHILE MAINTAINING TRAFFIC ON THE EXISTING ROADWAY.
3. CONSTRUCT VETERANS BLVD, BULLARD AVE EXTENSION AND THE VETERANS BLVD OVERCROSSING.
4. ALL DRIVEWAYS AND ACCESS ROADS TO GOLDEN STATE BLVD TO REMAIN OPEN DURING THIS STAGE.
5. CONSTRUCT TEMPORARY PAVEMENT ON THE NORTH SIDE OF SHAW AVE AND MODIFY EXISTING AT-GRADE RAILROAD CROSSING. MAINTAIN ACCESS TO THE EXISTING DRIVEWAYS ALONG SHAW AVE.
6. PROVIDE TEMPORARY ACCESS ROAD TO THE EXISTING W BULLARD AVE WEST OF UPRR.
7. MAINTAIN ACCESS TO ALL ADJACENT PROPERTIES ON CORNELIA AVE AND SANTA ANA AVE DURING CONSTRUCTION.
8. THE INTERSECTION OF SHAW AND CORNELIA AVE WILL BE TEMPORARILY CLOSED DURING CONSTRUCTION AT THE INTERSECTION.

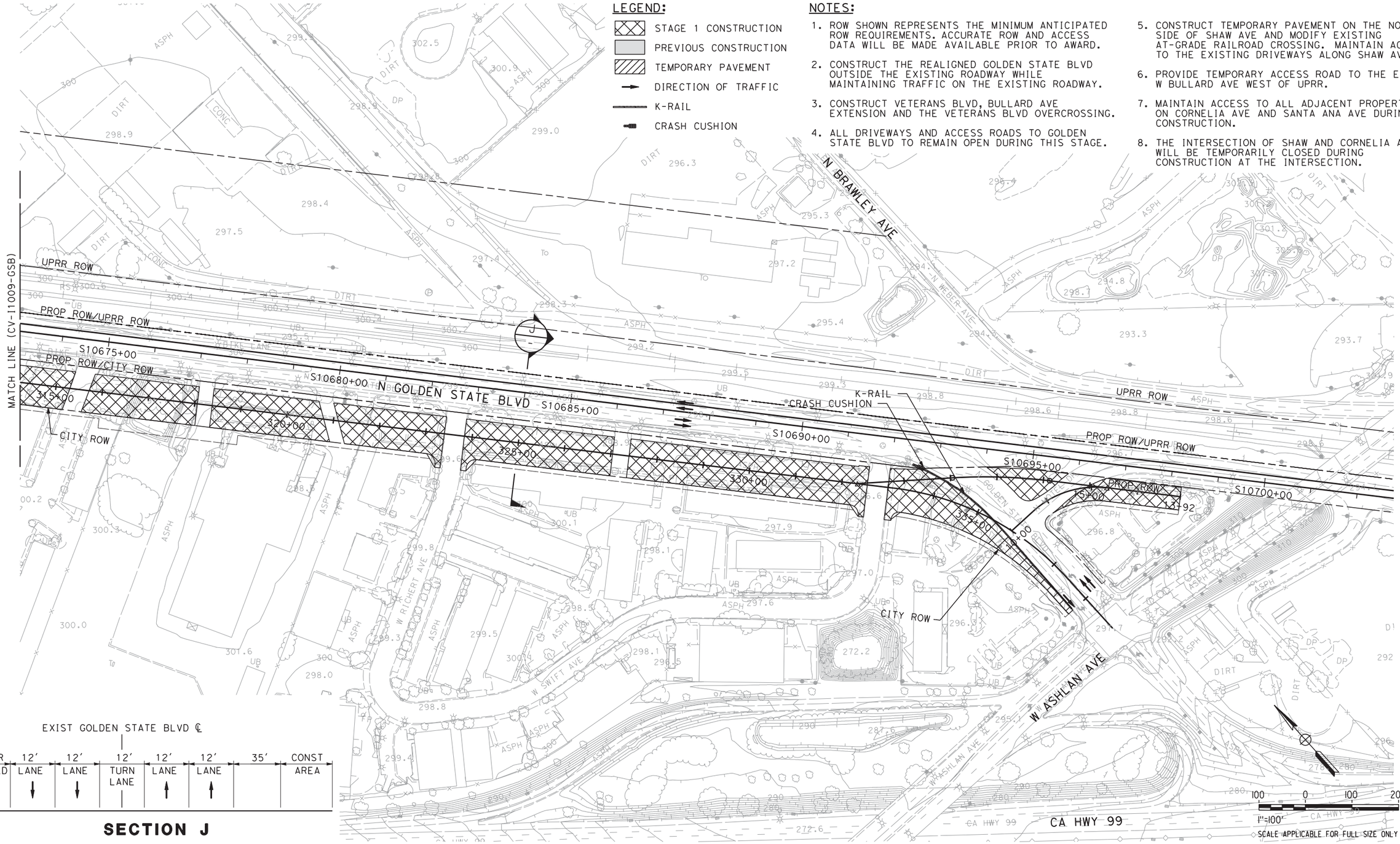

SECTION J

REV	DATE	BY	CHK	APP	DESCRIPTION

DESIGNED BY V. CHIO
DRAWN BY R. MUNOZ
CHECKED BY L. HEUSTON
IN CHARGE F. NOBARI
DATE 11/22/11

PROPOSED PRELIMINARY DESIGN

NOT FOR CONSTRUCTION

AECOM Technical Services, Inc.
2020 L Street, Suite 300
Sacramento, CA 95811
CH2MHILL

CALIFORNIA HIGH-SPEED RAIL AUTHORITY

CALIFORNIA HIGH-SPEED TRAIN PROJECT
SIERRA SUBDIVISION
PACKAGE 1A
CONSTRUCTION STAGING
STAGE 1
GOLDEN STATE BOULEVARD

CONTRACT NO.
DRAWING NO. CV-I1010-GSB
SCALE AS SHOWN
SHEET NO.

sleong 11/16/2011 4:40:22 PM CAHSRP-R1.TBL CHSR_half_black-pdf995.pc Documents and Settings\sleong\My Documents\NDMProj\356751 - California High Speed Rail - SR99 Improvements\1S-CV-I1010-GSB.dgn

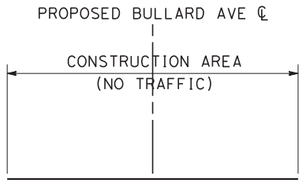

SECTION K

LEGEND:

- STAGE 1 CONSTRUCTION
- PREVIOUS CONSTRUCTION
- TEMPORARY PAVEMENT
- DIRECTION OF TRAFFIC
- K-RAIL
- CRASH CUSHION

NOTES:

1. ROW SHOWN REPRESENTS THE MINIMUM ANTICIPATED ROW REQUIREMENTS. ACCURATE ROW AND ACCESS DATA WILL BE MADE AVAILABLE PRIOR TO AWARD.
2. CONSTRUCT THE REALIGNED GOLDEN STATE BLVD OUTSIDE THE EXISTING ROADWAY WHILE MAINTAINING TRAFFIC ON THE EXISTING ROADWAY.
3. CONSTRUCT VETERANS BLVD, BULLARD AVE EXTENSION AND THE VETERANS BLVD OVERCROSSING.
4. ALL DRIVEWAYS AND ACCESS ROADS TO GOLDEN STATE BLVD TO REMAIN OPEN DURING THIS STAGE.
5. CONSTRUCT TEMPORARY PAVEMENT ON THE NORTH SIDE OF SHAW AVE AND MODIFY EXISTING AT-GRADE RAILROAD CROSSING. MAINTAIN ACCESS TO THE EXISTING DRIVEWAYS ALONG SHAW AVE.
6. PROVIDE TEMPORARY ACCESS ROAD TO THE EXISTING W BULLARD AVE WEST OF UPRR.
7. MAINTAIN ACCESS TO ALL ADJACENT PROPERTIES ON CORNELIA AVE AND SANTA ANA AVE DURING CONSTRUCTION.
8. THE INTERSECTION OF SHAW AND CORNELIA AVE WILL BE TEMPORARILY CLOSED DURING CONSTRUCTION AT THE INTERSECTION.

REV	DATE	BY	CHK	APP	DESCRIPTION

DESIGNED BY V. CHIO
DRAWN BY R. MUNOZ
CHECKED BY L. HEUSTON
IN CHARGE F. NOBARI
DATE 11/22/11

PROPOSED PRELIMINARY DESIGN

NOT FOR CONSTRUCTION

AECOM Technical Services, Inc.
2020 L Street, Suite 300
Sacramento, CA 95811
CH2MHILL

CALIFORNIA HIGH-SPEED RAIL AUTHORITY

CALIFORNIA HIGH-SPEED TRAIN PROJECT
SIERRA SUBDIVISION
PACKAGE 1A
CONSTRUCTION STAGING
STAGE 1
GOLDEN STATE BOULEVARD

CONTRACT NO.
DRAWING NO. CV-I1011-GSB
SCALE AS SHOWN
SHEET NO.

sleong 11/16/2011 4:40:23 PM CAHSRP-R1.TBL CHSR_half_black-pdf995.pc*Documents and Settings\sleong\My Documents\NDMProj\356751 - California High Speed Rail - SR99 Improvements\1S-CV-I1011-GSB.dgn

LEGEND:

- STAGE 2 CONSTRUCTION
- PREVIOUS CONSTRUCTION
- TEMPORARY PAVEMENT
- DIRECTION OF TRAFFIC
- K-RAIL
- CRASH CUSHION

NOTES:

1. ROW SHOWN REPRESENTS THE MINIMUM ANTICIPATED ROW REQUIREMENTS. ACCURATE ROW AND ACCESS DATA WILL BE MADE AVAILABLE PRIOR TO AWARD.
2. CONSTRUCT THE REMAINING PORTION OF THE REALIGNED GOLDEN STATE BLVD AND PAVEMENT AT THE TIE-IN LOCATIONS NEAR HERNDON AVE AND ASHLAN AVE. TRAFFIC TO REMAIN ON THE EXISTING ROADWAY.
3. SHIFT TRAFFIC TO THE NORTH ONTO THE NEWLY CONSTRUCTED PAVEMENT ALONG SHAW AVE. CONSTRUCT THE SOUTHERN HALF OF SHAW AVE, INCLUDING THE SOUTHERN HALF OF THE OVERCROSSING STRUCTURE, WHILE MAINTAINING ACCESS TO THE EXISTING DRIVEWAYS.
4. COORDINATE THE CLOSURE OF GOLDEN STATE BLVD NEAR IT'S INTERSECTIION WITH ASHLAN AVE WITH THE CLOSURE OF ASHLAN AVE.

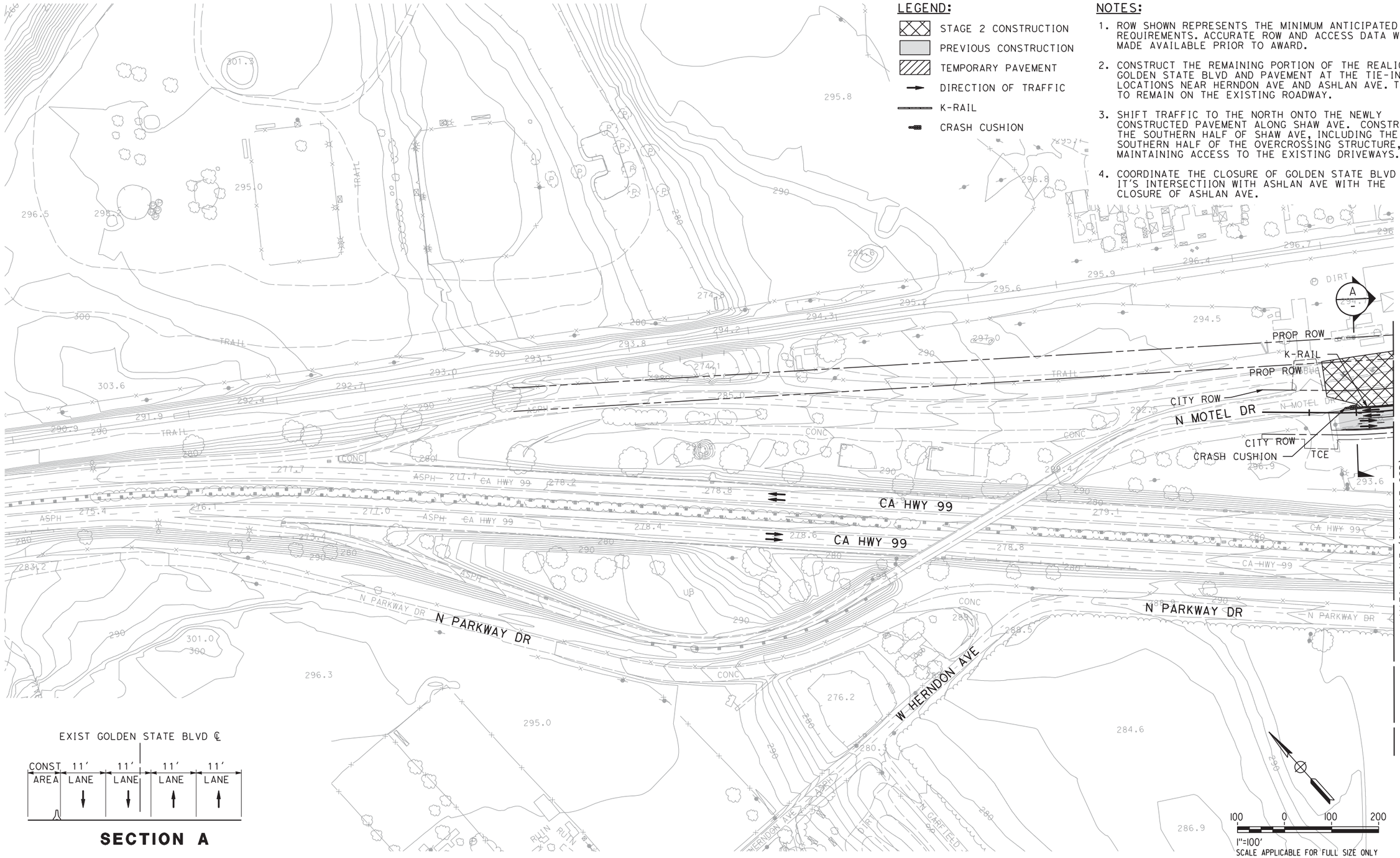

EXIST GOLDEN STATE BLVD ℄

CONST AREA	11' LANE	11' LANE	11' LANE	11' LANE

SECTION A

REV	DATE	BY	CHK	APP	DESCRIPTION

DESIGNED BY V. CHIO
DRAWN BY R. MUNOZ
CHECKED BY L. HEUSTON
IN CHARGE F. NOBARI
DATE 11/22/11

PROPOSED PRELIMINARY DESIGN

NOT FOR CONSTRUCTION

AECOM Technical Services, Inc.
2020 L Street, Suite 300
Sacramento, CA 95811

CH2MHILL

CALIFORNIA HIGH-SPEED RAIL AUTHORITY

CALIFORNIA HIGH-SPEED TRAIN PROJECT
SIERRA SUBDIVISION
PACKAGE 1A
CONSTRUCTION STAGING
STAGE 2
GOLDEN STATE BOULEVARD

CONTRACT NO.
DRAWING NO. CV-11012-GSB
SCALE AS SHOWN
SHEET NO.

sleong 11/16/2011 5:08:37 PM CAHSRP-R1.TBL CHSR_half_black-pdf995.pc_PN Documents and Settings\sleong\My Documents\MDMProj\356751 - California High Speed Rail - SR99 Improvements\1S-CV-11012-GSB.dgn

LEGEND:

- STAGE 2 CONSTRUCTION
- PREVIOUS CONSTRUCTION
- TEMPORARY PAVEMENT
- DIRECTION OF TRAFFIC
- K-RAIL
- CRASH CUSHION

NOTES:

1. ROW SHOWN REPRESENTS THE MINIMUM ANTICIPATED ROW REQUIREMENTS. ACCURATE ROW AND ACCESS DATA WILL BE MADE AVAILABLE PRIOR TO AWARD.
2. CONSTRUCT THE REMAINING PORTION OF THE REALIGNED GOLDEN STATE BLVD AND PAVEMENT AT THE TIE-IN LOCATIONS NEAR HERNDON AVE AND ASHLAN AVE. TRAFFIC TO REMAIN ON THE EXISTING ROADWAY.
3. SHIFT TRAFFIC TO THE NORTH ONTO THE NEWLY CONSTRUCTED PAVEMENT ALONG SHAW AVE. CONSTRUCT THE SOUTHERN HALF OF SHAW AVE, INCLUDING THE SOUTHERN HALF OF THE OVERCROSSING STRUCTURE, WHILE MAINTAINING ACCESS TO THE EXISTING DRIVEWAYS.
4. COORDINATE THE CLOSURE OF GOLDEN STATE BLVD NEAR IT'S INTERSECTIION WITH ASHLAN AVE WITH THE CLOSURE OF ASHLAN AVE.

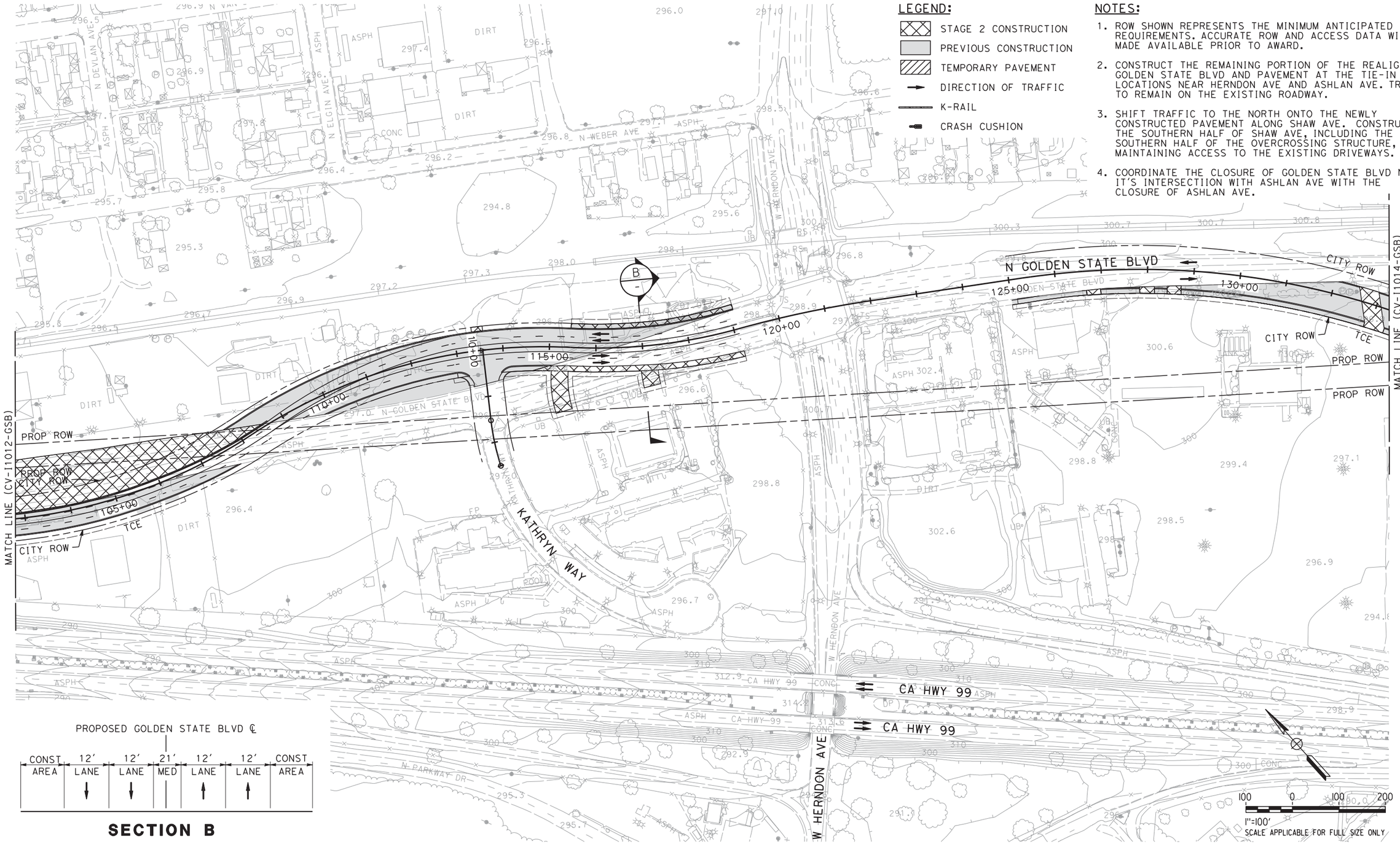

PROPOSED GOLDEN STATE BLVD ℄

CONST AREA	12' LANE	12' LANE	21' MED	12' LANE	12' LANE	CONST AREA

SECTION B

REV	DATE	BY	CHK	APP	DESCRIPTION

DESIGNED BY V. CHIO
DRAWN BY R. MUNOZ
CHECKED BY L. HEUSTON
IN CHARGE F. NOBARI
DATE 11/22/11

PROPOSED PRELIMINARY DESIGN

NOT FOR CONSTRUCTION

AECOM Technical Services, Inc.
2020 L Street, Suite 300
Sacramento, CA 95811
CH2MHILL

CALIFORNIA HIGH-SPEED RAIL AUTHORITY

CALIFORNIA HIGH-SPEED TRAIN PROJECT
SIERRA SUBDIVISION
PACKAGE 1A
CONSTRUCTION STAGING
STAGE 2
GOLDEN STATE BOULEVARD

CONTRACT NO.
DRAWING NO. CV-I1013-GSB
SCALE AS SHOWN
SHEET NO.

sleong 11/16/2011 5:09:35 PM CAHSRP-R1.TBL CHSR_half_black-pdf995.pc3 C:\Documents and Settings\sleong\My Documents\NDMProj\356751 - California High Speed Rail - SR99 Improvements\1S-CV-I1013-GSB.dgn

LEGEND:

- STAGE 2 CONSTRUCTION
- PREVIOUS CONSTRUCTION
- TEMPORARY PAVEMENT
- DIRECTION OF TRAFFIC
- K-RAIL
- CRASH CUSHION

NOTES:

1. ROW SHOWN REPRESENTS THE MINIMUM ANTICIPATED ROW REQUIREMENTS. ACCURATE ROW AND ACCESS DATA WILL BE MADE AVAILABLE PRIOR TO AWARD.
2. CONSTRUCT THE REMAINING PORTION OF THE REALIGNED GOLDEN STATE BLVD AND PAVEMENT AT THE TIE-IN LOCATIONS NEAR HERNDON AVE AND ASHLAN AVE. TRAFFIC TO REMAIN ON THE EXISTING ROADWAY.
3. SHIFT TRAFFIC TO THE NORTH ONTO THE NEWLY CONSTRUCTED PAVEMENT ALONG SHAW AVE. CONSTRUCT THE SOUTHERN HALF OF SHAW AVE, INCLUDING THE SOUTHERN HALF OF THE OVERCROSSING STRUCTURE, WHILE MAINTAINING ACCESS TO THE EXISTING DRIVEWAYS.
4. COORDINATE THE CLOSURE OF GOLDEN STATE BLVD NEAR IT'S INTERSECTIION WITH ASHLAN AVE WITH THE CLOSURE OF ASHLAN AVE.

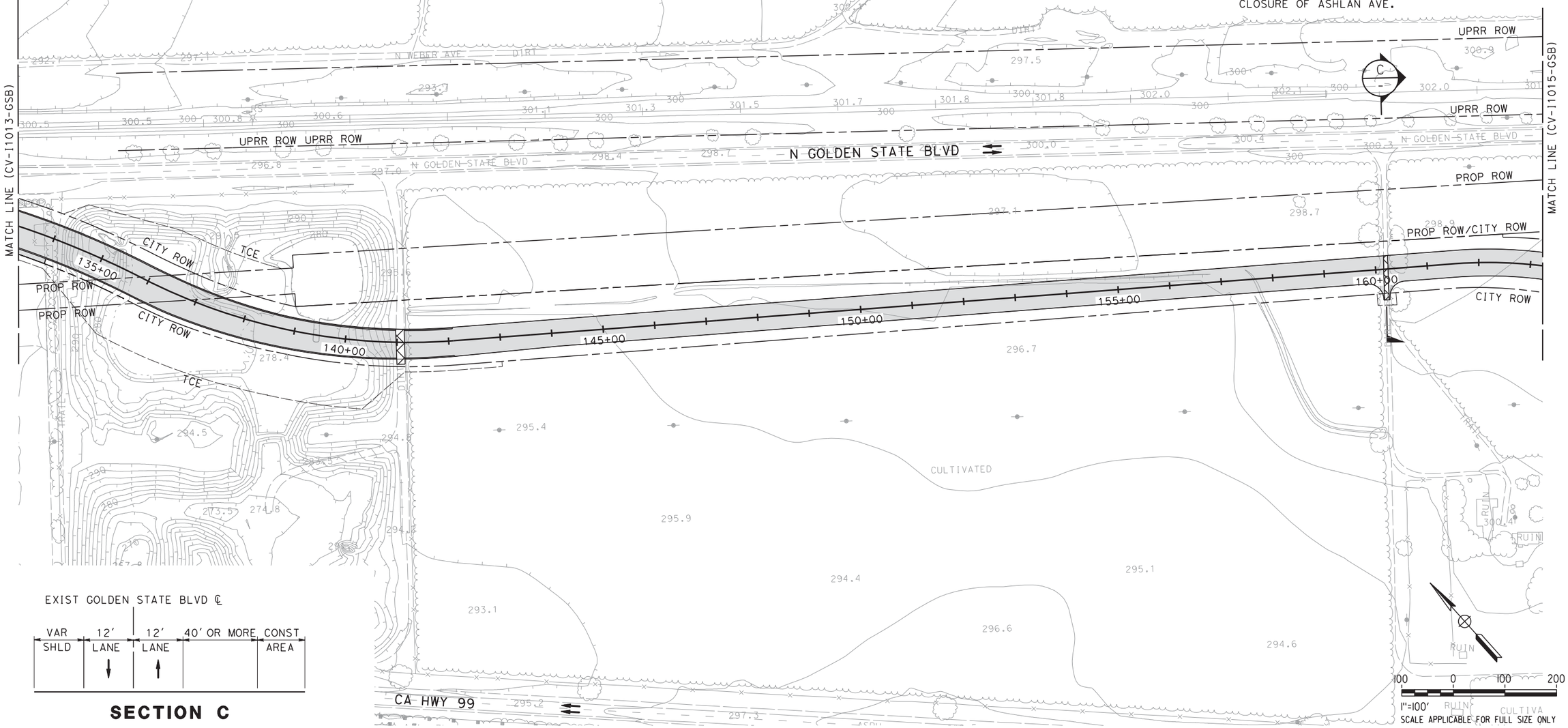

SECTION C

REV	DATE	BY	CHK	APP	DESCRIPTION

DESIGNED BY R. HENDERSON
DRAWN BY J. TYLER
CHECKED BY L. HEUSTON
IN CHARGE F. NOBARI
DATE 11/22/11

PROPOSED PRELIMINARY DESIGN

NOT FOR CONSTRUCTION

AECOM Technical Services, Inc.
2020 L Street, Suite 300
Sacramento, CA 95811

CH2MHILL

CALIFORNIA HIGH-SPEED RAIL AUTHORITY

CALIFORNIA HIGH-SPEED TRAIN PROJECT
SIERRA SUBDIVISION
PACKAGE 1A
CONSTRUCTION STAGING
STAGE 2
GOLDEN STATE BOULEVARD

CONTRACT NO.
DRAWING NO. CV-I1014-GSB
SCALE AS SHOWN
SHEET NO.

sleong 11/16/2011 5:10:34 PM CAHSRP-R1.TBL CHSR_half_black-pdf995.prt C:\Documents and Settings\sleong\My Documents\NDMProj\356751 - California High Speed Rail - SR99 Improvements\1S-CV-I1014-GSB.dgn

LEGEND:

- STAGE 2 CONSTRUCTION
- PREVIOUS CONSTRUCTION
- TEMPORARY PAVEMENT
- DIRECTION OF TRAFFIC
- K-RAIL
- CRASH CUSHION

NOTES:

1. ROW SHOWN REPRESENTS THE MINIMUM ANTICIPATED ROW REQUIREMENTS. ACCURATE ROW AND ACCESS DATA WILL BE MADE AVAILABLE PRIOR TO AWARD.
2. CONSTRUCT THE REMAINING PORTION OF THE REALIGNED GOLDEN STATE BLVD AND PAVEMENT AT THE TIE-IN LOCATIONS NEAR HERNDON AVE AND ASHLAN AVE. TRAFFIC TO REMAIN ON THE EXISTING ROADWAY.
3. SHIFT TRAFFIC TO THE NORTH ONTO THE NEWLY CONSTRUCTED PAVEMENT ALONG SHAW AVE. CONSTRUCT THE SOUTHERN HALF OF SHAW AVE, INCLUDING THE SOUTHERN HALF OF THE OVERCROSSING STRUCTURE, WHILE MAINTAINING ACCESS TO THE EXISTING DRIVEWAYS.
4. COORDINATE THE CLOSURE OF GOLDEN STATE BLVD NEAR IT'S INTERSECTIION WITH ASHLAN AVE WITH THE CLOSURE OF ASHLAN AVE.
5. PROVIDE TEMPORARY ACCESS ROAD TO THE EXISTING W BULLARD AVE WEST OF UPRR.

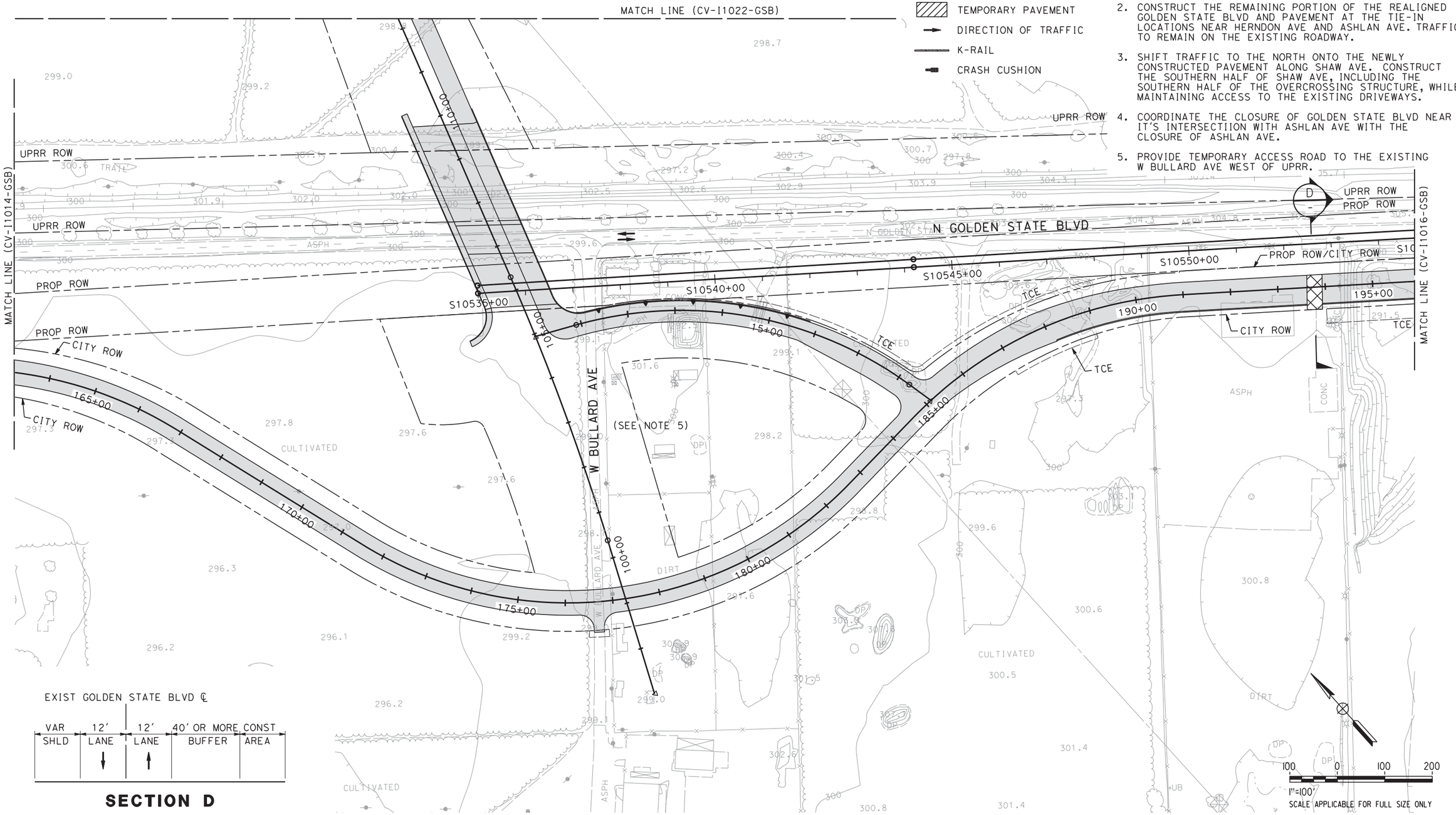

REV	DATE	BY	CHK	APP	DESCRIPTION

DESIGNED BY V. CHIO
DRAWN BY R. MUNOZ
CHECKED BY L. HEUSTON
IN CHARGE F. NOBARI
DATE 12/08/11

PROPOSED PRELIMINARY DESIGN

NOT FOR CONSTRUCTION

AECOM Technical Services, Inc.
2020 L Street, Suite 300
Sacramento, CA 95811
CH2MHILL

CALIFORNIA HIGH-SPEED RAIL AUTHORITY

CALIFORNIA HIGH-SPEED TRAIN PROJECT
SIERRA SUBDIVISION
PACKAGE 1A
CONSTRUCTION STAGING
STAGE 2
GOLDEN STATE BOULEVARD

CONTRACT NO.
DRAWING NO. CV-I1015-GSB
SCALE AS SHOWN
SHEET NO.

12/5/2011 7:08:09 PM CAHSRP-R1.TBL CHSR_half_black-pdf995.pc*Documents and Settings\sleong\My Documents\NDMProj\356751 - California High Speed Rail - SR99 Improvements\1S-CV-I1015-GSB.dgn sleong

2/13/2012 3:28:34 PM CAHSRP-R1.TBL CHSR_half_black-pdf995.pc*Documents and Settings\sleong\My Documents\NDMProj\356751 - California High Speed Rail - SR99 Improvements\1S-CV-I1016-GSB_REVIS

LEGEND:

- STAGE 2 CONSTRUCTION
- PREVIOUS CONSTRUCTION
- TEMPORARY PAVEMENT
- DIRECTION OF TRAFFIC
- K-RAIL
- CRASH CUSHION

NOTES:

1. ROW SHOWN REPRESENTS THE MINIMUM ANTICIPATED ROW REQUIREMENTS. ACCURATE ROW AND ACCESS DATA WILL BE MADE AVAILABLE PRIOR TO AWARD.
2. CONSTRUCT THE REMAINING PORTION OF THE REALIGNED GOLDEN STATE BLVD AND PAVEMENT AT THE TIE-IN LOCATIONS NEAR HERNDON AVE AND ASHLAN AVE. TRAFFIC TO REMAIN ON THE EXISTING ROADWAY.
3. SHIFT TRAFFIC TO THE NORTH ONTO THE NEWLY CONSTRUCTED PAVEMENT ALONG SHAW AVE. CONSTRUCT THE SOUTHERN HALF OF SHAW AVE, INCLUDING THE SOUTHERN HALF OF THE OVERCROSSING STRUCTURE, WHILE MAINTAINING ACCESS TO EXISTING DRIVEWAYS.
4. COORDINATE THE CLOSURE OF GOLDEN STATE BLVD NEAR THE INTERSECTIION WITH ASHLAN AVE WITH THE CLOSURE OF ASHLAN AVE.
5. COORDINATE WITH UPRR AND OBTAIN THE NECESSARY PERMITS PRIOR TO CLOSURE OF EXISTING AT-GRADE RAILROAD CROSSING AT CARNEGIE AVE.

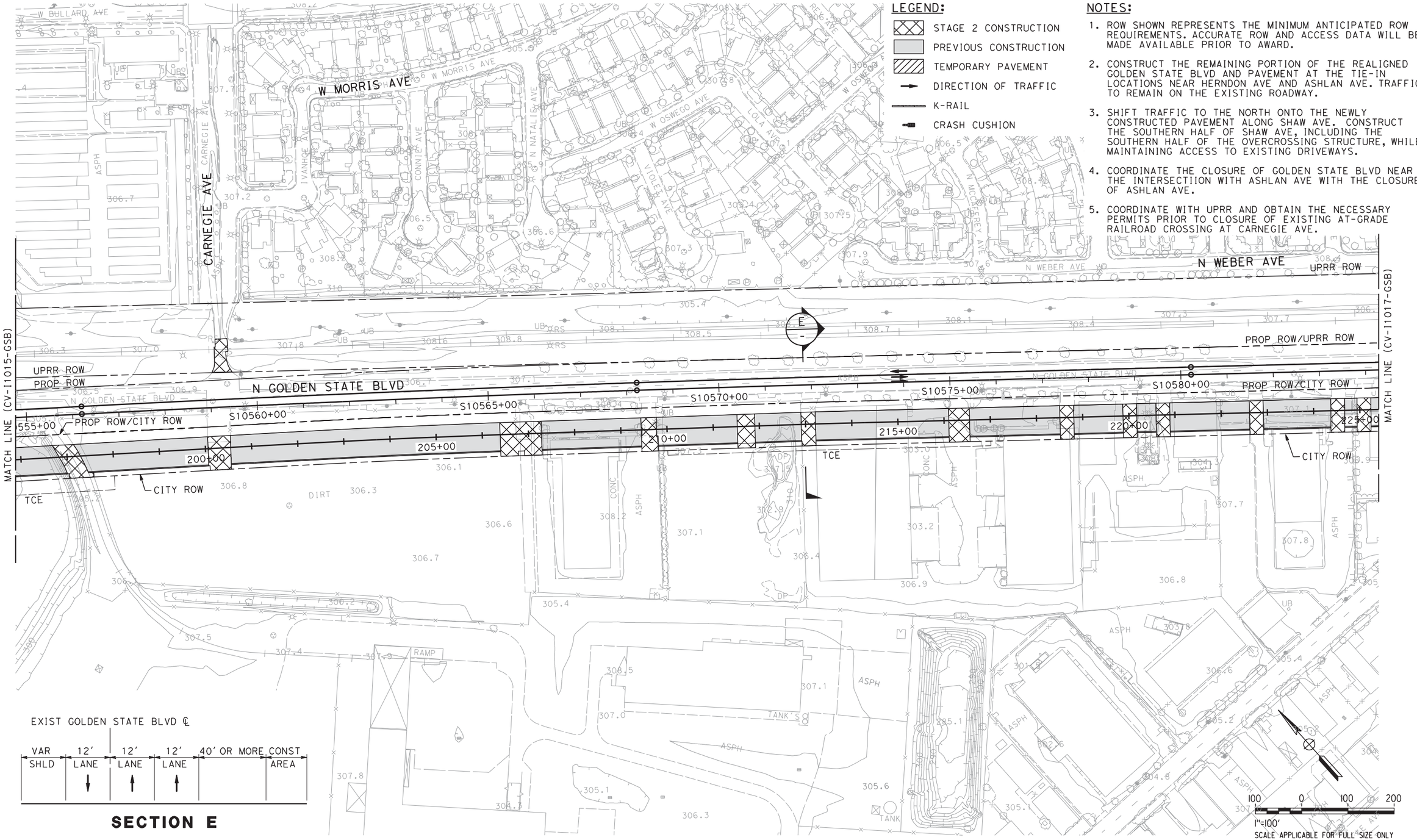

REV	DATE	BY	CHK	APP	DESCRIPTION

DESIGNED BY V. CHIO
DRAWN BY R. MUNOZ
CHECKED BY L. HEUSTON
IN CHARGE F. NOBARI
DATE 2/17/12

PROPOSED PRELIMINARY DESIGN

NOT FOR CONSTRUCTION

AECOM Technical Services, Inc.
2020 L Street, Suite 300
Sacramento, CA 95811
CH2MHILL

CALIFORNIA HIGH-SPEED RAIL AUTHORITY

CALIFORNIA HIGH-SPEED TRAIN PROJECT
SIERRA SUBDIVISION
PACKAGE 1A
CONSTRUCTION STAGING
STAGE 2
GOLDEN STATE BOULEVARD

CONTRACT NO.
DRAWING NO. CV-I1016-GSB
SCALE AS SHOWN
SHEET NO.

sleong 2/13/2012 3:28:34 PM

LEGEND:

- STAGE 2 CONSTRUCTION
- PREVIOUS CONSTRUCTION
- TEMPORARY PAVEMENT
- DIRECTION OF TRAFFIC
- K-RAIL
- CRASH CUSHION

NOTES:

1. ROW SHOWN REPRESENTS THE MINIMUM ANTICIPATED ROW REQUIREMENTS. ACCURATE ROW AND ACCESS DATA WILL BE MADE AVAILABLE PRIOR TO AWARD.
2. CONSTRUCT THE REMAINING PORTION OF THE REALIGNED GOLDEN STATE BLVD AND PAVEMENT AT THE TIE-IN LOCATIONS NEAR HERNDON AVE AND ASHLAN AVE. TRAFFIC TO REMAIN ON THE EXISTING ROADWAY.
3. SHIFT TRAFFIC TO THE NORTH ONTO THE NEWLY CONSTRUCTED PAVEMENT ALONG SHAW AVE. CONSTRUCT THE SOUTHERN HALF OF SHAW AVE, INCLUDING THE SOUTHERN HALF OF THE OVERCROSSING STRUCTURE, WHILE MAINTAINING ACCESS TO THE EXISTING DRIVEWAYS.
4. COORDINATE THE CLOSURE OF GOLDEN STATE BLVD NEAR IT'S INTERSECTIION WITH ASHLAN AVE WITH THE CLOSURE OF ASHLAN AVE.

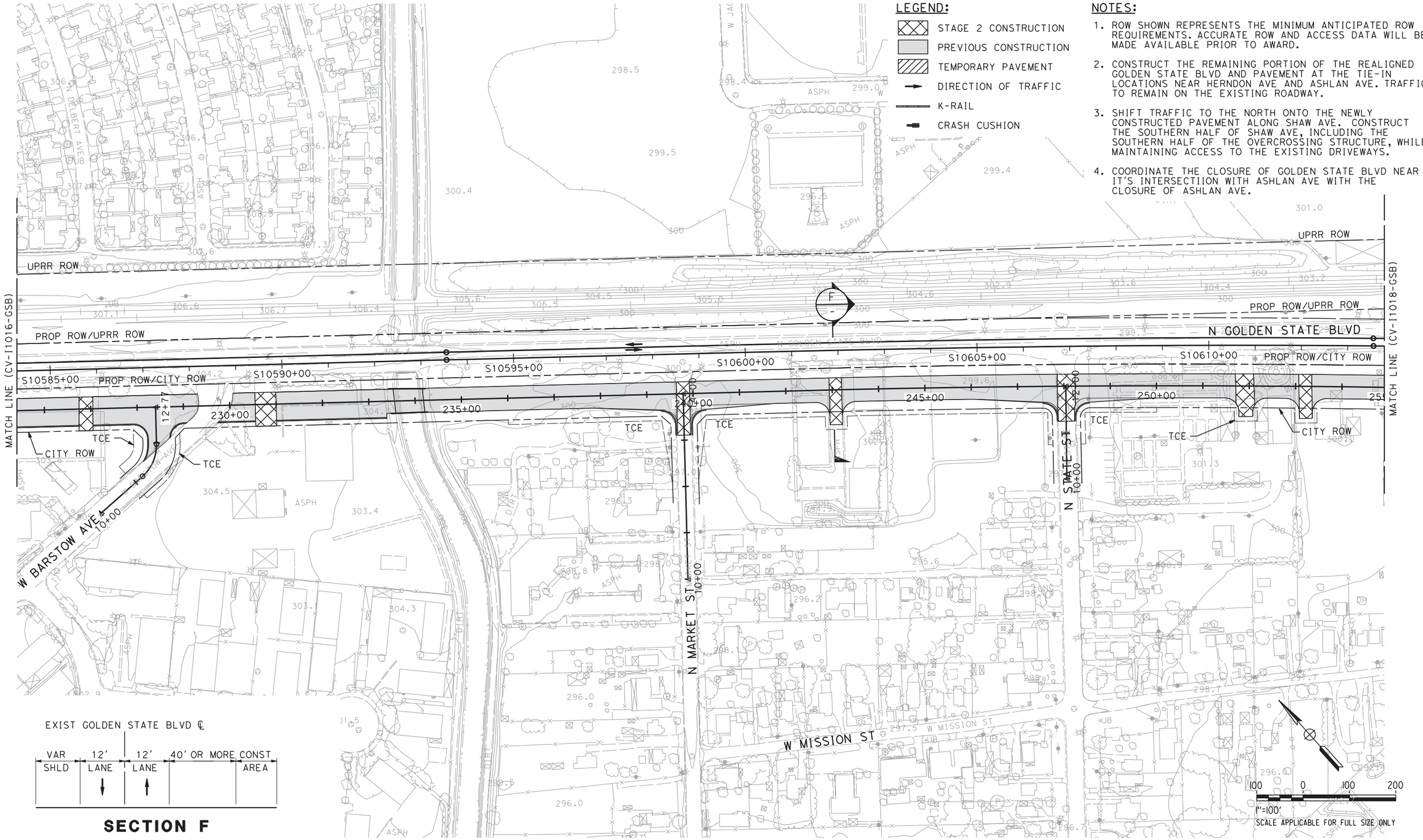

EXIST GOLDEN STATE BLVD ℄

VAR SHLD	12' LANE	12' LANE	40' OR MORE	CONST AREA

SECTION F

REV	DATE	BY	CHK	APP	DESCRIPTION

DESIGNED BY V. CHIO
DRAWN BY R. MUNOZ
CHECKED BY L. HEUSTON
IN CHARGE F. NOBARI
DATE 11/22/11

PROPOSED PRELIMINARY DESIGN

NOT FOR CONSTRUCTION

AECOM Technical Services, Inc.
2020 L Street, Suite 300
Sacramento, CA 95811
CH2MHILL

CALIFORNIA HIGH-SPEED RAIL AUTHORITY

CALIFORNIA HIGH-SPEED TRAIN PROJECT
SIERRA SUBDIVISION
PACKAGE 1A
CONSTRUCTION STAGING
STAGE 2
GOLDEN STATE BOULEVARD

CONTRACT NO.
DRAWING NO. CV-I1017-GSB
SCALE AS SHOWN
SHEET NO.

sleong 11/16/2011 5:14:02 PM CAHSRP-R1.TBL CHSR_half_black-pdf995.pc N:\Documents and Settings\sleong\My Documents\NDMProj\356751 - California High Speed Rail - SR99 Improvements\1S-CV-I1017-GSB.dgn

sleong 2/16/2012 6:49:31 PM CAHSRP-R1.TBL CHSR_half_black-pdf995.pc\My Documents\NDMProj\356751 - California High Speed Rail - SR99 Improvements\1S-CV-I1018-GSB_REVISED\Documents and Settings\sleong

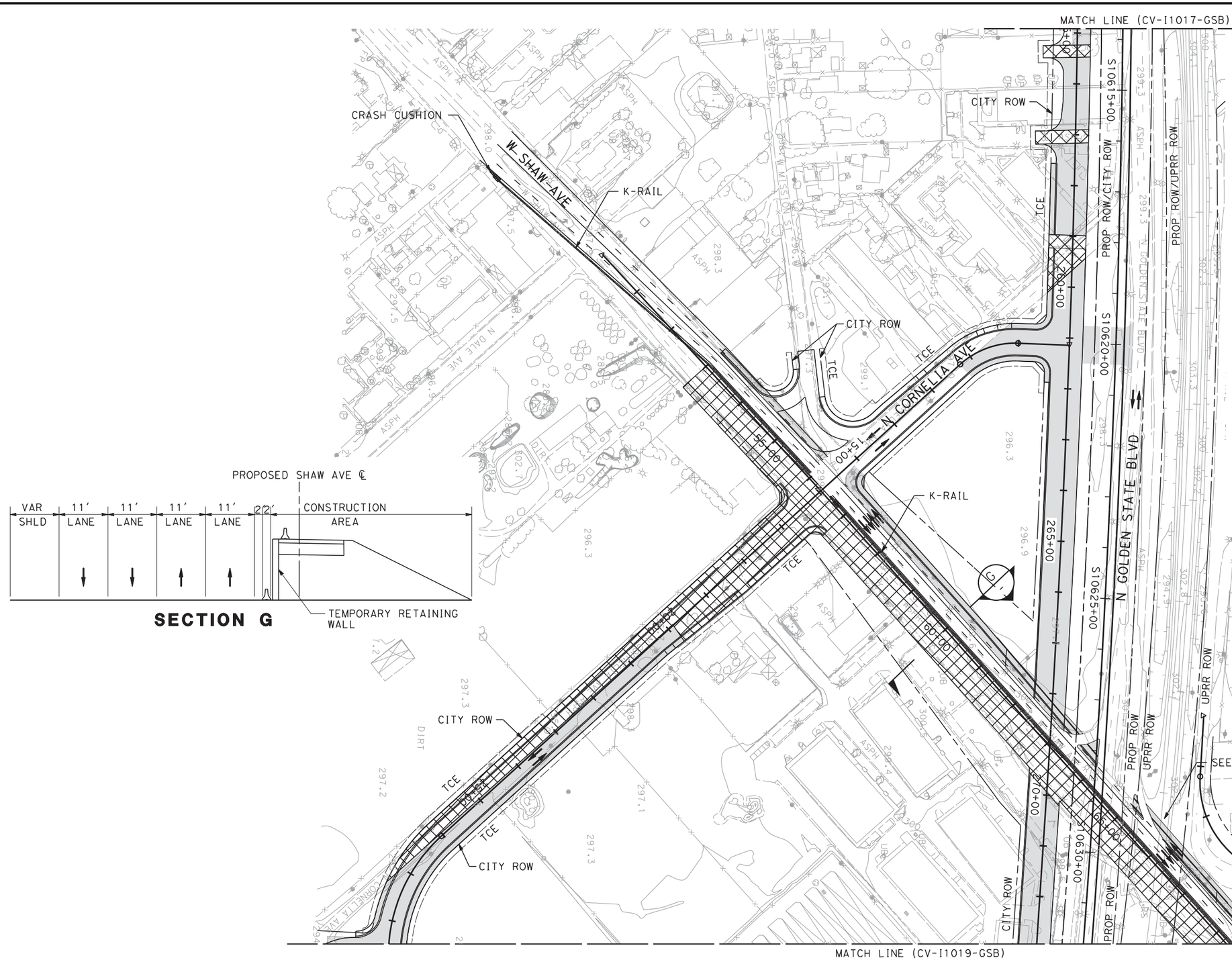

NOTES:

1. ROW SHOWN REPRESENTS THE MINIMUM ANTICIPATED ROW REQUIREMENTS. ACCURATE ROW AND ACCESS DATA WILL BE MADE AVAILABLE PRIOR TO AWARD.
2. CONSTRUCT THE REMAINING PORTION OF THE REALIGNED GOLDEN STATE BLVD AND PAVEMENT AT THE TIE-IN LOCATIONS NEAR HERNDON AVE AND ASHLAN AVE. TRAFFIC TO REMAIN ON THE EXISTING ROADWAY.
3. SHIFT TRAFFIC TO THE NORTH ONTO THE NEWLY CONSTRUCTED PAVEMENT ALONG SHAW AVE. CONSTRUCT THE SOUTHERN HALF OF SHAW AVE, INCLUDING THE SOUTHERN HALF OF THE OVERCROSSING STRUCTURE, WHILE MAINTAINING ACCESS TO THE EXISTING DRIVEWAYS.
4. COORDINATE THE CLOSURE OF GOLDEN STATE BLVD NEAR IT'S INTERSECTIION WITH ASHLAN AVE WITH THE CLOSURE OF ASHLAN AVE.
5. PROVIDE OPENINGS ALONG THE K-RAIL TO ACCOMMODATE UPRR OPERATIONS AT THE RAILROAD CROSSING

LEGEND:

- STAGE 2 CONSTRUCTION
- PREVIOUS CONSTRUCTION
- TEMPORARY PAVEMENT
- DIRECTION OF TRAFFIC
- K-RAIL
- CRASH CUSHION

100 0 100 200
1"=100′
SCALE APPLICABLE FOR FULL SIZE ONLY

REV	DATE	BY	CHK	APP	DESCRIPTION

DESIGNED BY V. CHIO
DRAWN BY R. MUNOZ
CHECKED BY L. HEUSTON
IN CHARGE F. NOBARI
DATE 2/17/12

PROPOSED PRELIMINARY DESIGN

NOT FOR CONSTRUCTION

AECOM Technical Services, Inc.
2020 L Street, Suite 300
Sacramento, CA 95811
CH2MHILL

CALIFORNIA HIGH-SPEED RAIL AUTHORITY

CALIFORNIA HIGH-SPEED TRAIN PROJECT
SIERRA SUBDIVISION
PACKAGE 1A
CONSTRUCTION STAGING
STAGE 2
GOLDEN STATE BOULEVARD

CONTRACT NO.
DRAWING NO. CV-I1018-GSB
SCALE AS SHOWN
SHEET NO.

2/16/2012 6:49:31 PM

12/6/2011 10:28:43 AM CAHSRP-R1.TBL CHSR_half_black-pdf995.pdf C:\Documents and Settings\sleong\My Documents\NDMProj\356751 - California High Speed Rail - SR99 Improvements\1S-CV-I1019-GSB.dgn

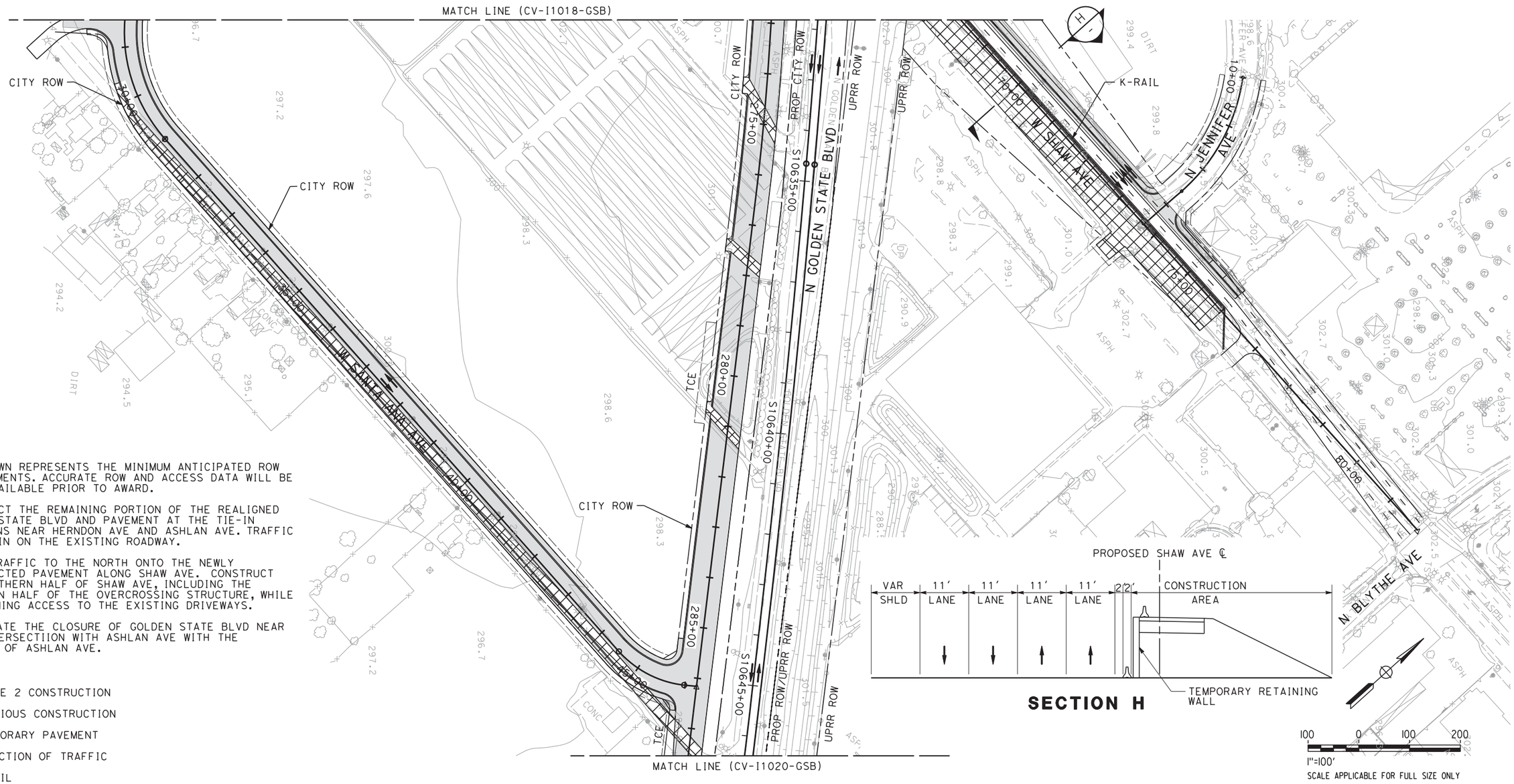

NOTES:

1. ROW SHOWN REPRESENTS THE MINIMUM ANTICIPATED ROW REQUIREMENTS. ACCURATE ROW AND ACCESS DATA WILL BE MADE AVAILABLE PRIOR TO AWARD.
2. CONSTRUCT THE REMAINING PORTION OF THE REALIGNED GOLDEN STATE BLVD AND PAVEMENT AT THE TIE-IN LOCATIONS NEAR HERNDON AVE AND ASHLAN AVE. TRAFFIC TO REMAIN ON THE EXISTING ROADWAY.
3. SHIFT TRAFFIC TO THE NORTH ONTO THE NEWLY CONSTRUCTED PAVEMENT ALONG SHAW AVE. CONSTRUCT THE SOUTHERN HALF OF SHAW AVE, INCLUDING THE SOUTHERN HALF OF THE OVERCROSSING STRUCTURE, WHILE MAINTAINING ACCESS TO THE EXISTING DRIVEWAYS.
4. COORDINATE THE CLOSURE OF GOLDEN STATE BLVD NEAR IT'S INTERSECTIION WITH ASHLAN AVE WITH THE CLOSURE OF ASHLAN AVE.

LEGEND:

- STAGE 2 CONSTRUCTION
- PREVIOUS CONSTRUCTION
- TEMPORARY PAVEMENT
- DIRECTION OF TRAFFIC
- K-RAIL
- CRASH CUSHION

REV	DATE	BY	CHK	APP	DESCRIPTION

DESIGNED BY V. CHIO
DRAWN BY R. MUNOZ
CHECKED BY L. HEUSTON
IN CHARGE F. NOBARI
DATE 12/08/11

PROPOSED PRELIMINARY DESIGN

NOT FOR CONSTRUCTION

AECOM Technical Services, Inc.
2020 L Street, Suite 300
Sacramento, CA 95811
CH2MHILL

CALIFORNIA HIGH-SPEED RAIL AUTHORITY

CALIFORNIA HIGH-SPEED TRAIN PROJECT
SIERRA SUBDIVISION
PACKAGE 1A
CONSTRUCTION STAGING
STAGE 2
GOLDEN STATE BOULEVARD

CONTRACT NO.
DRAWING NO. CV-I1019-GSB
SCALE AS SHOWN
SHEET NO.

12/6/2011 10:28:43 AM

LEGEND:

- STAGE 2 CONSTRUCTION
- PREVIOUS CONSTRUCTION
- TEMPORARY PAVEMENT
- DIRECTION OF TRAFFIC
- K-RAIL
- CRASH CUSHION

NOTES:

1. ROW SHOWN REPRESENTS THE MINIMUM ANTICIPATED ROW REQUIREMENTS. ACCURATE ROW AND ACCESS DATA WILL BE MADE AVAILABLE PRIOR TO AWARD.
2. CONSTRUCT THE REMAINING PORTION OF THE REALIGNED GOLDEN STATE BLVD AND PAVEMENT AT THE TIE-IN LOCATIONS NEAR HERNDON AVE AND ASHLAN AVE. TRAFFIC TO REMAIN ON THE EXISTING ROADWAY.
3. SHIFT TRAFFIC TO THE NORTH ONTO THE NEWLY CONSTRUCTED PAVEMENT ALONG SHAW AVE. CONSTRUCT THE SOUTHERN HALF OF SHAW AVE, INCLUDING THE SOUTHERN HALF OF THE OVERCROSSING STRUCTURE, WHILE MAINTAINING ACCESS TO THE EXISTING DRIVEWAYS.
4. COORDINATE THE CLOSURE OF GOLDEN STATE BLVD NEAR IT'S INTERSECTIION WITH ASHLAN AVE WITH THE CLOSURE OF ASHLAN AVE.

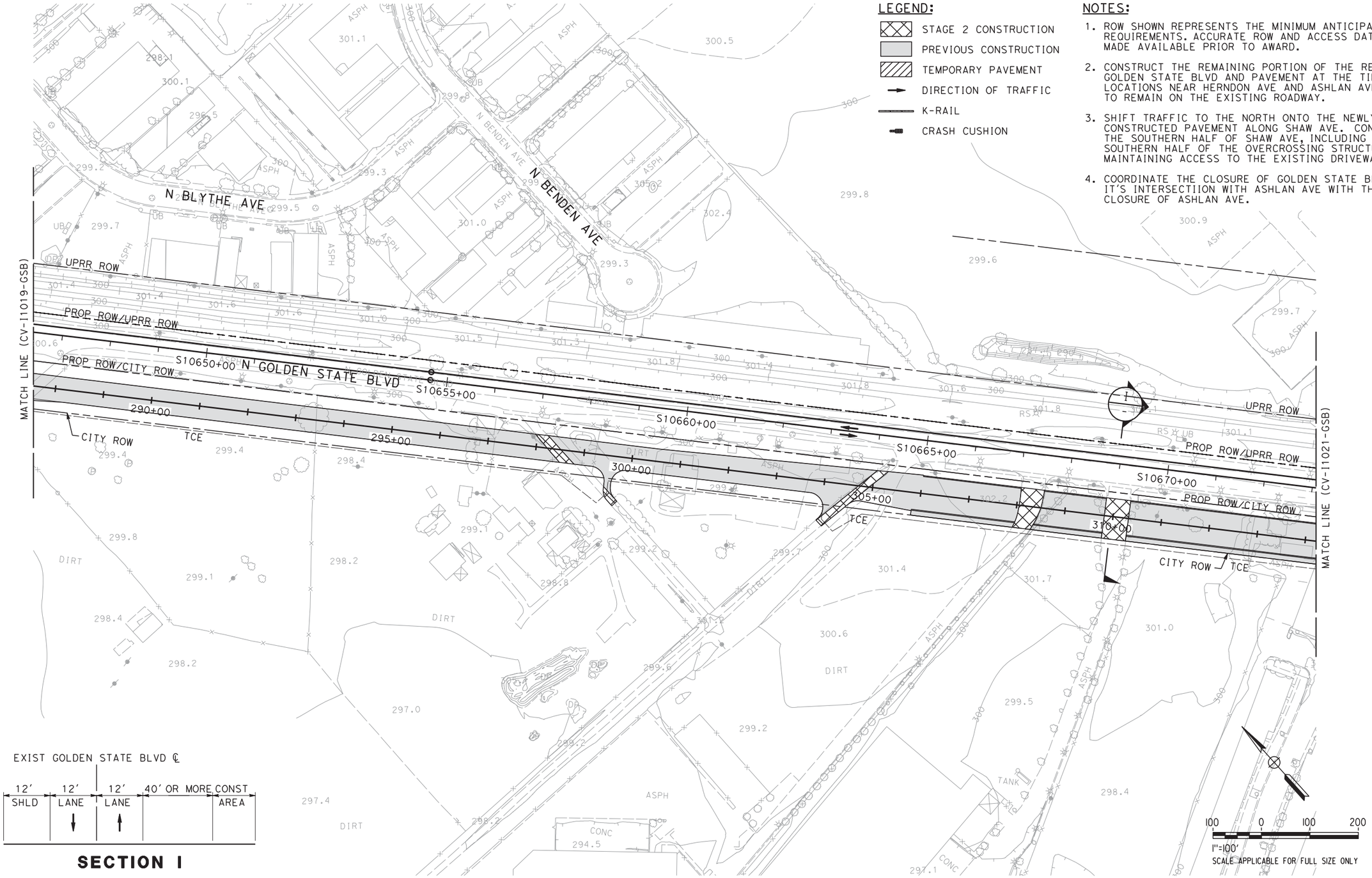

EXIST GOLDEN STATE BLVD ℄

12'	12'	12'	40' OR MORE CONST
SHLD	LANE	LANE	AREA

SECTION I

REV	DATE	BY	CHK	APP	DESCRIPTION

DESIGNED BY V. CHIO
DRAWN BY R. MUNOZ
CHECKED BY L. HEUSTON
IN CHARGE F. NOBARI
DATE 11/22/11

PROPOSED PRELIMINARY DESIGN

NOT FOR CONSTRUCTION

AECOM Technical Services, Inc.
2020 L Street, Suite 300
Sacramento, CA 95811
CH2MHILL

CALIFORNIA HIGH-SPEED RAIL AUTHORITY

CALIFORNIA HIGH-SPEED TRAIN PROJECT
SIERRA SUBDIVISION
PACKAGE 1A
CONSTRUCTION STAGING
STAGE 2
GOLDEN STATE BOULEVARD

CONTRACT NO.
DRAWING NO. CV-11020-GSB
SCALE AS SHOWN
SHEET NO.

sleong 11/16/2011 5:17:24 PM CAHSRP-R1.TBL CHSR_half_black-pdf995.pcNDDocuments and Settings\sleong\My Documents\NDMProj\356751 - California High Speed Rail - SR99 Improvements\1S-CV-11020-GSB.dgn

LEGEND:

- STAGE 2 CONSTRUCTION
- PREVIOUS CONSTRUCTION
- TEMPORARY PAVEMENT
- DIRECTION OF TRAFFIC
- K-RAIL
- CRASH CUSHION

NOTES:

1. ROW SHOWN REPRESENTS THE MINIMUM ANTICIPATED ROW REQUIREMENTS. ACCURATE ROW AND ACCESS DATA WILL BE MADE AVAILABLE PRIOR TO AWARD.
2. CONSTRUCT THE REMAINING PORTION OF THE REALIGNED GOLDEN STATE BLVD AND PAVEMENT AT THE TIE-IN LOCATIONS NEAR HERNDON AVE AND ASHLAN AVE. TRAFFIC TO REMAIN ON THE EXISTING ROADWAY.
3. SHIFT TRAFFIC TO THE NORTH ONTO THE NEWLY CONSTRUCTED PAVEMENT ALONG SHAW AVE. CONSTRUCT THE SOUTHERN HALF OF SHAW AVE, INCLUDING THE SOUTHERN HALF OF THE OVERCROSSING STRUCTURE, WHILE MAINTAINING ACCESS TO THE EXISTING DRIVEWAYS.
4. COORDINATE THE CLOSURE OF GOLDEN STATE BLVD NEAR IT'S INTERSECTIION WITH ASHLAN AVE WITH THE CLOSURE OF ASHLAN AVE.

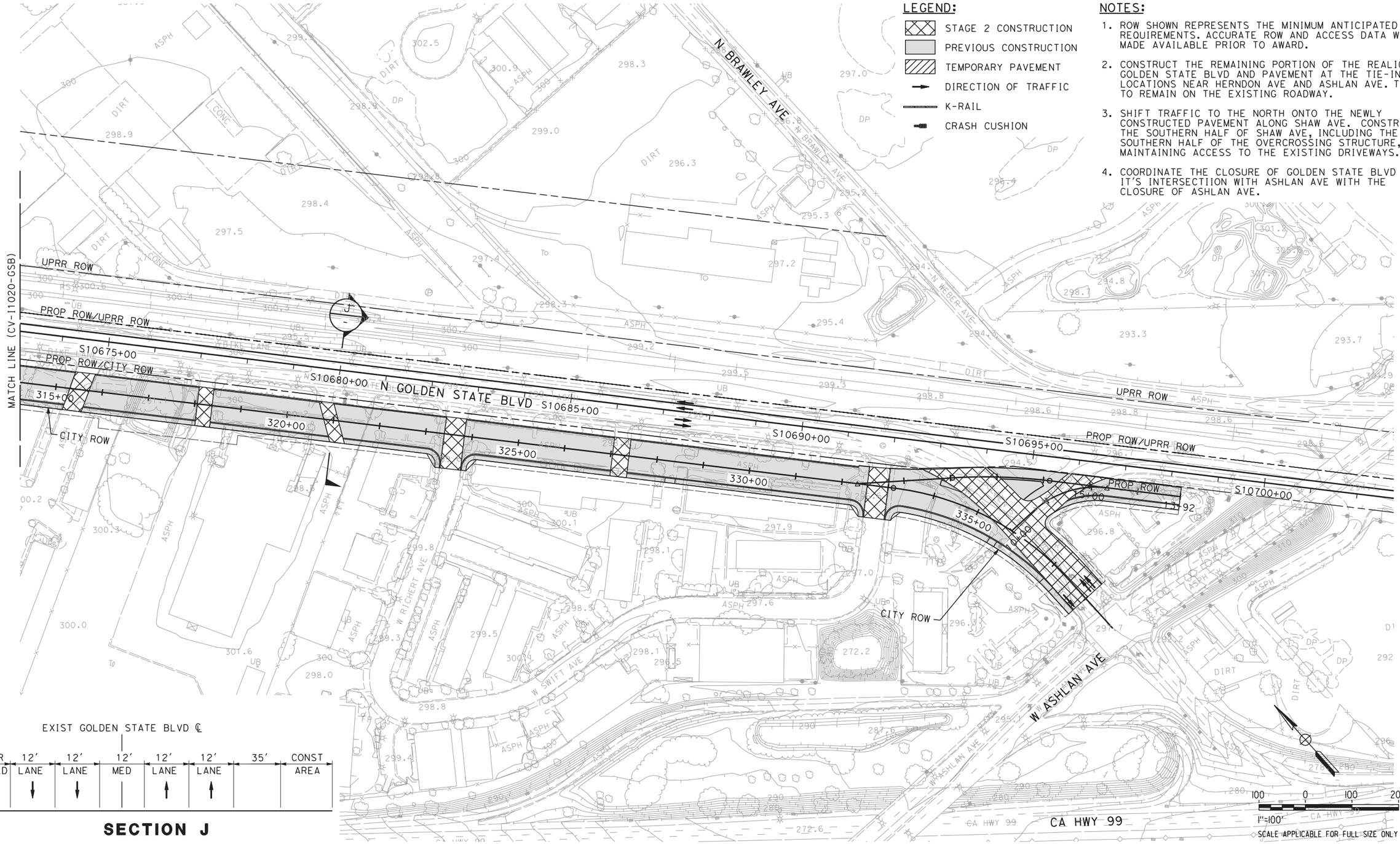

EXIST GOLDEN STATE BLVD ℄

VAR SHLD	12' LANE	12' LANE	12' MED	12' LANE	12' LANE	35'	CONST AREA

SECTION J

REV	DATE	BY	CHK	APP	DESCRIPTION

DESIGNED BY V. CHIO
DRAWN BY R. MUNOZ
CHECKED BY L. HEUSTON
IN CHARGE F. NOBARI
DATE 11/22/11

PROPOSED PRELIMINARY DESIGN

NOT FOR CONSTRUCTION

AECOM Technical Services, Inc.
2020 L Street, Suite 300
Sacramento, CA 95811
CH2MHILL

CALIFORNIA HIGH-SPEED RAIL AUTHORITY

CALIFORNIA HIGH-SPEED TRAIN PROJECT
SIERRA SUBDIVISION
PACKAGE 1A
CONSTRUCTION STAGING
STAGE 2
GOLDEN STATE BOULEVARD

CONTRACT NO.
DRAWING NO. CV-I1021-GSB
SCALE AS SHOWN
SHEET NO.

sleong 11/16/2011 5:18:19 PM C:\Documents and Settings\sleong\My Documents\NDMProj\356751 - California High Speed Rail - SR99 Improvements\1S-CV-I1021-GSB.dgn
CAHSRP-R1.TBL CHSR_half_black-pdf995.pen 11/16/2011 5:18:19 PM

NOTES:

1. ROW SHOWN REPRESENTS THE MINIMUM ANTICIPATED ROW REQUIREMENTS. ACCURATE ROW AND ACCESS DATA WILL BE MADE AVAILABLE PRIOR TO AWARD.
2. SHIFT TRAFFIC TO THE NEWLY CONSTRUCTED PAVEMENT AND THE OVERCROSSING STRUCTURE. CONSTRUCT THE NORTHERN HALF OF SHAW AVE, INCLUDING THE NORTHERN HALF OF THE OVERCROSSING STRUCTURE.
3. SHIFT TRAFFIC TO THE REALIGNED GOLDEN STATE BLVD. EXISTING GOLDEN STATE BLVD PAVEMENT TO BE DEMOLISHED DURING THIS STAGE.

LEGEND:

- STAGE 3 CONSTRUCTION
- PREVIOUS CONSTRUCTION
- TEMPORARY PAVEMENT
- DIRECTION OF TRAFFIC
- K-RAIL
- CRASH CUSHION

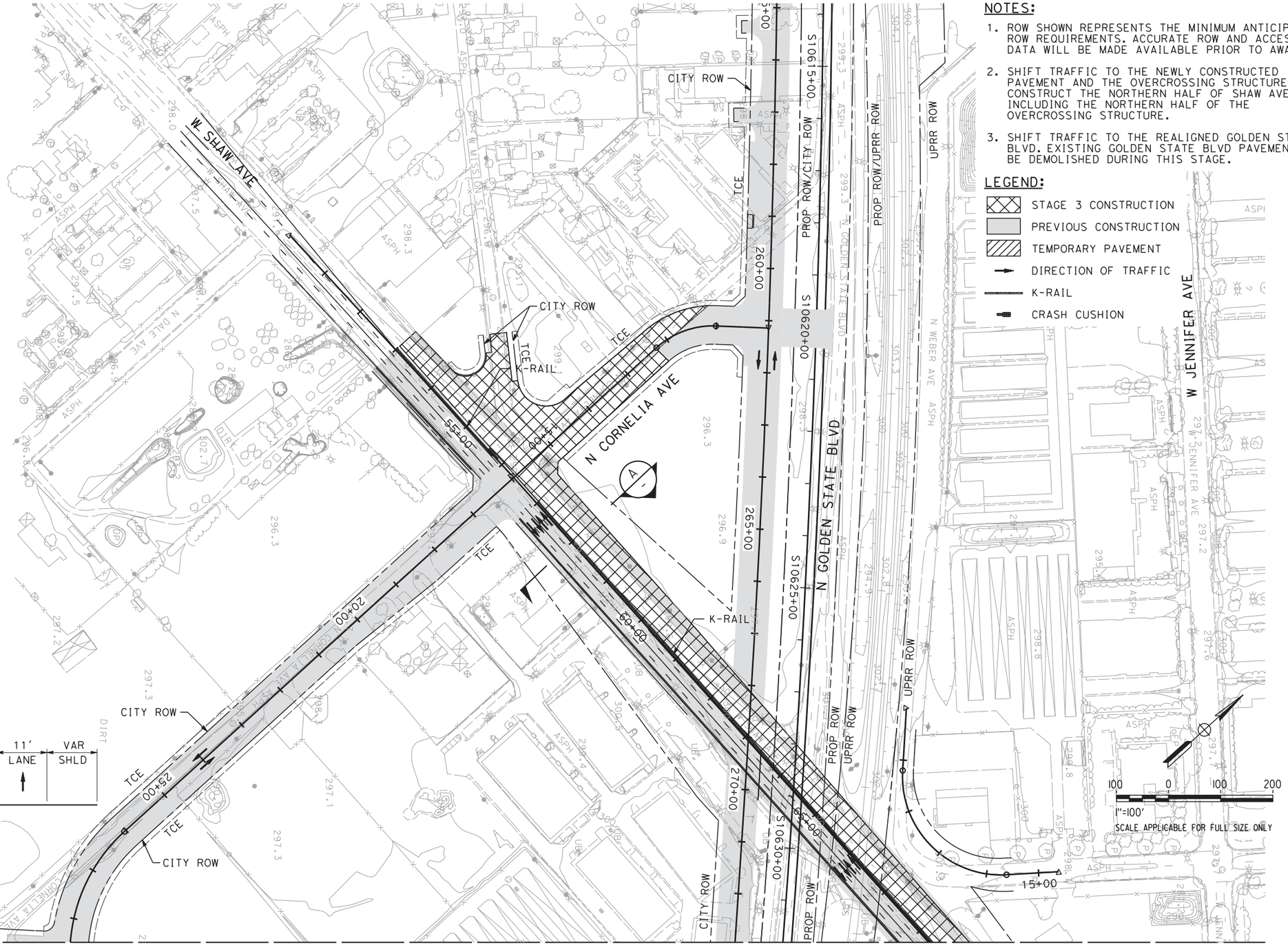

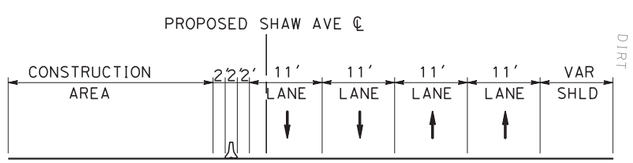

SECTION A

REV	DATE	BY	CHK	APP	DESCRIPTION

DESIGNED BY V. CHIO
DRAWN BY R. MUNOZ
CHECKED BY L. HEUSTON
IN CHARGE F. NOBARI
DATE 2/17/12

PROPOSED PRELIMINARY DESIGN

NOT FOR CONSTRUCTION

AECOM Technical Services, Inc.
2020 L Street, Suite 300
Sacramento, CA 95811

CH2MHILL

CALIFORNIA HIGH-SPEED RAIL AUTHORITY

CALIFORNIA HIGH-SPEED TRAIN PROJECT
SIERRA SUBDIVISION

PACKAGE 1A
CONSTRUCTION STAGING
STAGE 3
GOLDEN STATE BOULEVARD

CONTRACT NO.
DRAWING NO. CV-I1022-GSB
SCALE AS SHOWN
SHEET NO.

sleong 2/16/2012 6:49:59 PM CAHSRP-R1.TBL CHSR_half_black-pdf995.pt Documents and Settings\sleong\My Documents\NDMProj\356751 - California High Speed Rail - SR99 Improvements\1S-CV-I1022-GSB_REVISED

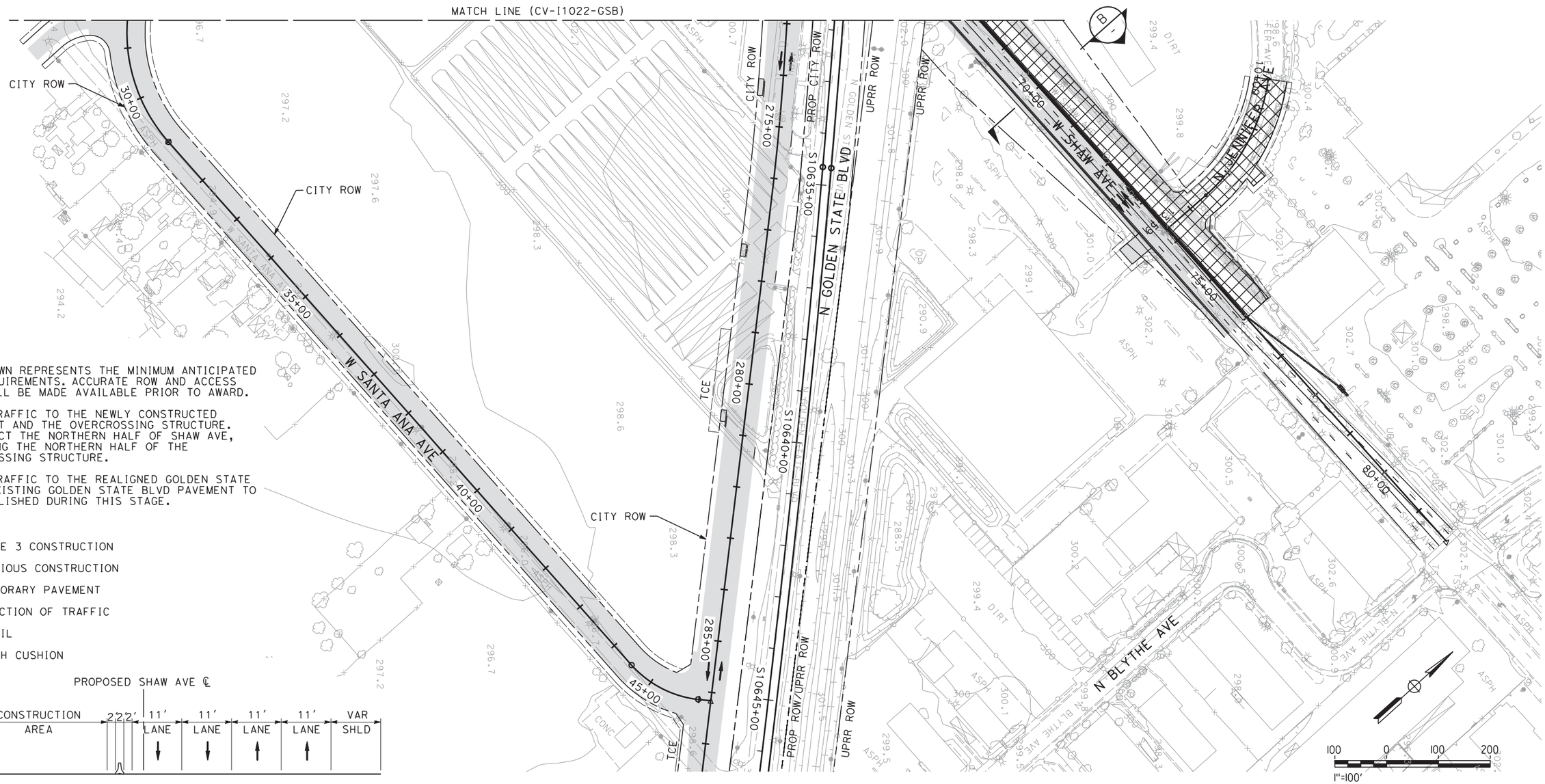

NOTES:

1. ROW SHOWN REPRESENTS THE MINIMUM ANTICIPATED ROW REQUIREMENTS. ACCURATE ROW AND ACCESS DATA WILL BE MADE AVAILABLE PRIOR TO AWARD.
2. SHIFT TRAFFIC TO THE NEWLY CONSTRUCTED PAVEMENT AND THE OVERCROSSING STRUCTURE. CONSTRUCT THE NORTHERN HALF OF SHAW AVE, INCLUDING THE NORTHERN HALF OF THE OVERCROSSING STRUCTURE.
3. SHIFT TRAFFIC TO THE REALIGNED GOLDEN STATE BLVD. EXISTING GOLDEN STATE BLVD PAVEMENT TO BE DEMOLISHED DURING THIS STAGE.

LEGEND:

- STAGE 3 CONSTRUCTION
- PREVIOUS CONSTRUCTION
- TEMPORARY PAVEMENT
- DIRECTION OF TRAFFIC
- K-RAIL
- CRASH CUSHION

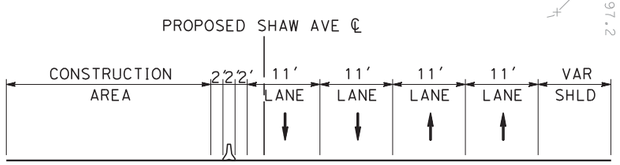

SECTION B

REV	DATE	BY	CHK	APP	DESCRIPTION

DESIGNED BY V. CHIO
DRAWN BY R. MUNOZ
CHECKED BY L. HEUSTON
IN CHARGE F. NOBARI
DATE 11/22/11

PROPOSED PRELIMINARY DESIGN

NOT FOR CONSTRUCTION

AECOM Technical Services, Inc.
2020 L Street, Suite 300
Sacramento, CA 95811
CH2MHILL

CALIFORNIA HIGH-SPEED RAIL AUTHORITY

CALIFORNIA HIGH-SPEED TRAIN PROJECT
SIERRA SUBDIVISION
PACKAGE 1A
CONSTRUCTION STAGING
STAGE 3
GOLDEN STATE BOULEVARD

CONTRACT NO.
DRAWING NO. CV-I1023-GSB
SCALE AS SHOWN
SHEET NO.

sleong 11/17/2011 9:13:13 AM CAHSRP-R1.TBL CHSR_half_black-pdf995.pt C:\Documents and Settings\sleong\My Documents\NDMProj\356751 - California High Speed Rail - SR99 Improvements\1S-CV-I1023-GSB.dgn
11/17/2011 9:13:13 AM

LEGEND:

- ROCK SLOPE PROTECTION (RSP)
- DRAINAGE INLET OR CATCH BASIN
- SD — STORM DRAIN
- EARTHEN DITCH, OR BIOFILTRATION SWALE, OR GRADE TO DRAIN
- REMOVAL ITEMS
- BASIN AREA REMOVED
- FLOODPLAIN LIMITS
- BASIN BOUNDARY
- STORM DRAIN TRUNKLINE FLOW DIRECTION
- SURFACE FLOW DIRECTION
- OVERSIDE DRAIN

ABBREVIATIONS:

FMFCD	FRESNO METROPOLITAN FLOOD CONTROL DISTRICT
OSD	OVERSIDE DRAIN
POC	POINT OF CONNECTION

GENERAL DRAINAGE NOTES:

1. ROW SHOWN REPRESENTS THE MINIMUM ANTICIPATED ROW REQUIREMENTS. ACCURATE ROW AND ACCESS DATA WILL BE MADE AVAILABLE PRIOR TO AWARD.
2. HORIZONTAL AND VERTICAL LOCATIONS OF EXISTING STORM DRAINS ARE BASED ON BEST AVAILABLE INFORMATION. VERIFY LOCATIONS AND ELEVATIONS OF ALL STORM DRAINS.
3. THE FMFCD "FUTURE" STORM DRAINS SHOWN ON THE PLANS ARE FOR REFERENCE ONLY, AND WILL BE CONSTRUCTED BY FMFCD AT A LATER DATE, UNLESS OTHERWISE NOTED. AT LOCATIONS WHERE THE "FUTURE" DRAINS ARE TO BE CONSTRUCTED AS PART OF THIS PROJECT, COORDINATE WITH THE FMFCD FOR STORM DRAIN SIZE, MATERIAL, AND LOCATION.

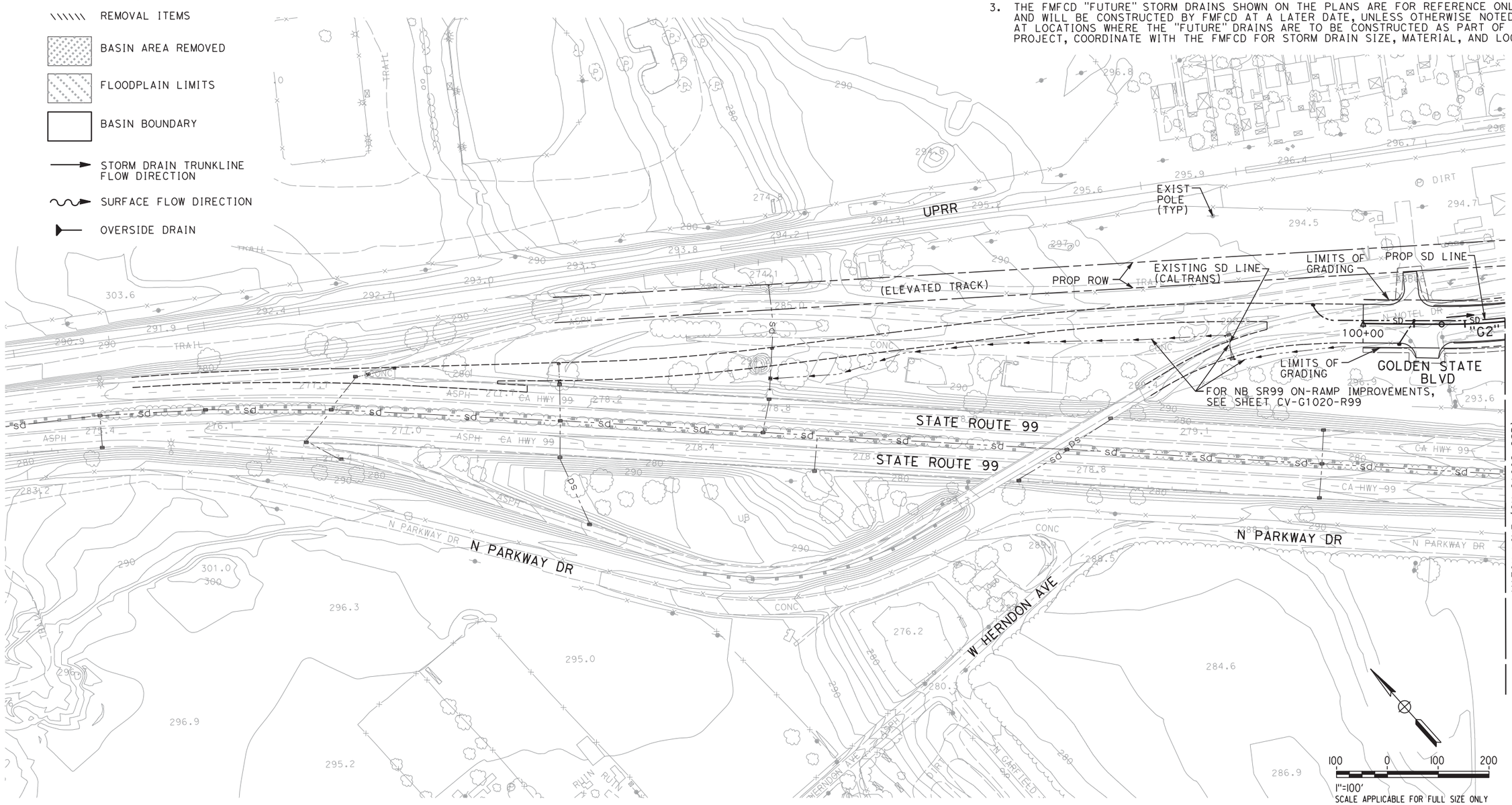

REV	DATE	BY	CHK	APP	DESCRIPTION

DESIGNED BY M. RANDALL
DRAWN BY J. TYLER
CHECKED BY R. HENDERSON
IN CHARGE F. NOBARI
DATE 02/01/12

PROPOSED PRELIMINARY DESIGN

NOT FOR CONSTRUCTION

AECOM Technical Services, Inc.
2020 L Street, Suite 300
Sacramento, CA 95811

CH2MHILL

CALIFORNIA HIGH-SPEED RAIL AUTHORITY

CALIFORNIA HIGH-SPEED TRAIN PROJECT
SIERRA SUBDIVISION
PACKAGE 1A
ROADWAY
GRADING AND DRAINAGE PLAN
GOLDEN STATE BOULEVARD

CONTRACT NO.
DRAWING NO. CV-G1001-GSB
SCALE AS SHOWN
SHEET NO.

sleong 2/13/2012 3:13:49 PM CAHSRP-R1.TBL CHSR_half_black-pdf995.pc3 C:\Documents and Settings\sleong\My Documents\NDMProj\356751 - California High Speed Rail - SR99 Improvements\1S-CV-G1001-GSB_REVISED.dwg 2/13/2012 3:13:49 PM

NOTES:

1. ROW SHOWN REPRESENTS THE MINIMUM ANTICIPATED ROW REQUIREMENTS. ACCURATE ROW AND ACCESS DATA WILL BE MADE AVAILABLE PRIOR TO AWARD.
2. GRADING OF EXISTING BASIN MAY BE MODIFIED TO TIE-IN TO BASIN RELOCATION. MODIFICATIONS MUST BE COORDINATED WITH FMFCD.
3. BASIN AREA AND VOLUME REMOVED COMPRISE IMPACTS TO FMFCD FACILITIES THAT SHALL BE MITIGATED AS PART OF THIS CONTRACT PER SPECIFICATIONS.

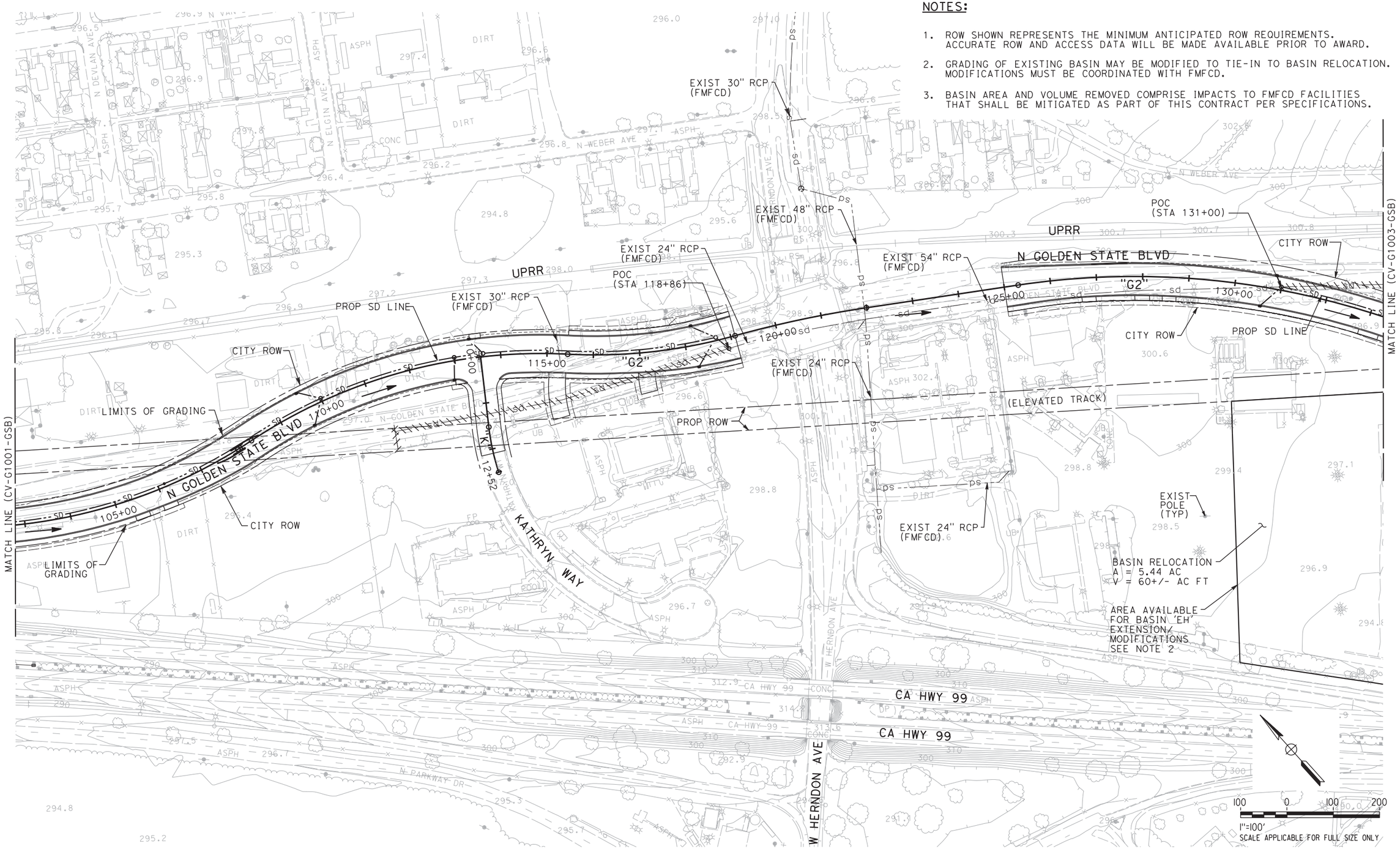

REV	DATE	BY	CHK	APP	DESCRIPTION

DESIGNED BY M. RANDALL
DRAWN BY J. TYLER
CHECKED BY R. HENDERSON
IN CHARGE F. NOBARI
DATE 12/08/11

PROPOSED PRELIMINARY DESIGN

NOT FOR CONSTRUCTION

AECOM Technical Services, Inc.
2020 L Street, Suite 300
Sacramento, CA 95811
CH2MHILL

CALIFORNIA HIGH-SPEED RAIL AUTHORITY

CALIFORNIA HIGH-SPEED TRAIN PROJECT
SIERRA SUBDIVISION
PACKAGE 1A
ROADWAY
GRADING AND DRAINAGE PLAN
GOLDEN STATE BOULEVARD

CONTRACT NO.
DRAWING NO. CV-G1002-GSB
SCALE AS SHOWN
SHEET NO.

imatagi 12/2/2011 11:09:52 AM CAHSRP-r1.tbl CHSR_half_black.plt C:\Users\imatagi\Documents\NDMProj\356751 - California High Speed Rail - SR99 Improvements\1S-CV-G1002-GSB.dgn

NOTES:

1. ROW SHOWN REPRESENTS THE MINIMUM ANTICIPATED ROW REQUIREMENTS. ACCURATE ROW AND ACCESS DATA WILL BE MADE AVAILABLE PRIOR TO AWARD.
2. GRADING OF EXISTING BASIN MAY BE MODIFIED TO TIE-IN TO BASIN RELOCATION. MODIFICATIONS MUST BE COORDINATED WITH FMFCD.
3. BASIN AREA AND VOLUME REMOVED COMPRISE IMPACTS TO FMFCD FACILITIES THAT SHALL BE MITIGATED AS PART OF THIS CONTRACT PER SPECIFICATIONS.

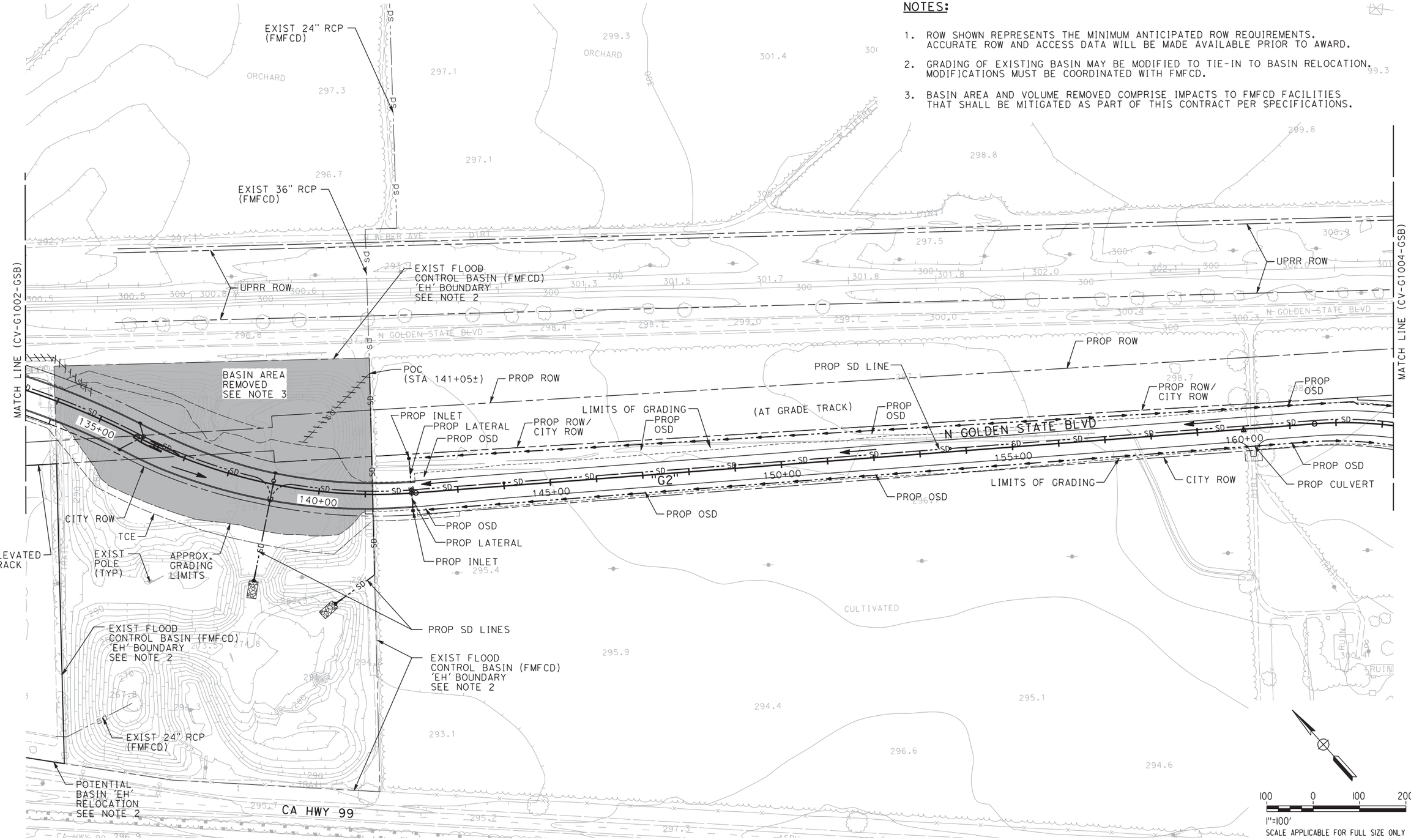

REV	DATE	BY	CHK	APP	DESCRIPTION

DESIGNED BY M. RANDALL
DRAWN BY J. TYLER
CHECKED BY R. HENDERSON
IN CHARGE F. NOBARI
DATE 12/08/11

PROPOSED PRELIMINARY DESIGN

NOT FOR CONSTRUCTION

AECOM Technical Services, Inc.
2020 L Street, Suite 300
Sacramento, CA 95811
CH2MHILL

CALIFORNIA HIGH-SPEED RAIL AUTHORITY

CALIFORNIA HIGH-SPEED TRAIN PROJECT
SIERRA SUBDIVISION
PACKAGE 1A
ROADWAY
GRADING AND DRAINAGE PLAN
GOLDEN STATE BOULEVARD

CONTRACT NO.
DRAWING NO. CV-G1003-GSB
SCALE AS SHOWN
SHEET NO.

imatagi 12/2/2011 11:10:59 AM CAHSRP-r1.tbl CHSR_half_black.plt C:\Users\imatagi\Documents\NDMProj\356751 - California High Speed Rail - SR99 Improvements\1S-CV-G1003-GSB.dgn 12/2/2011 11:11:00 AM

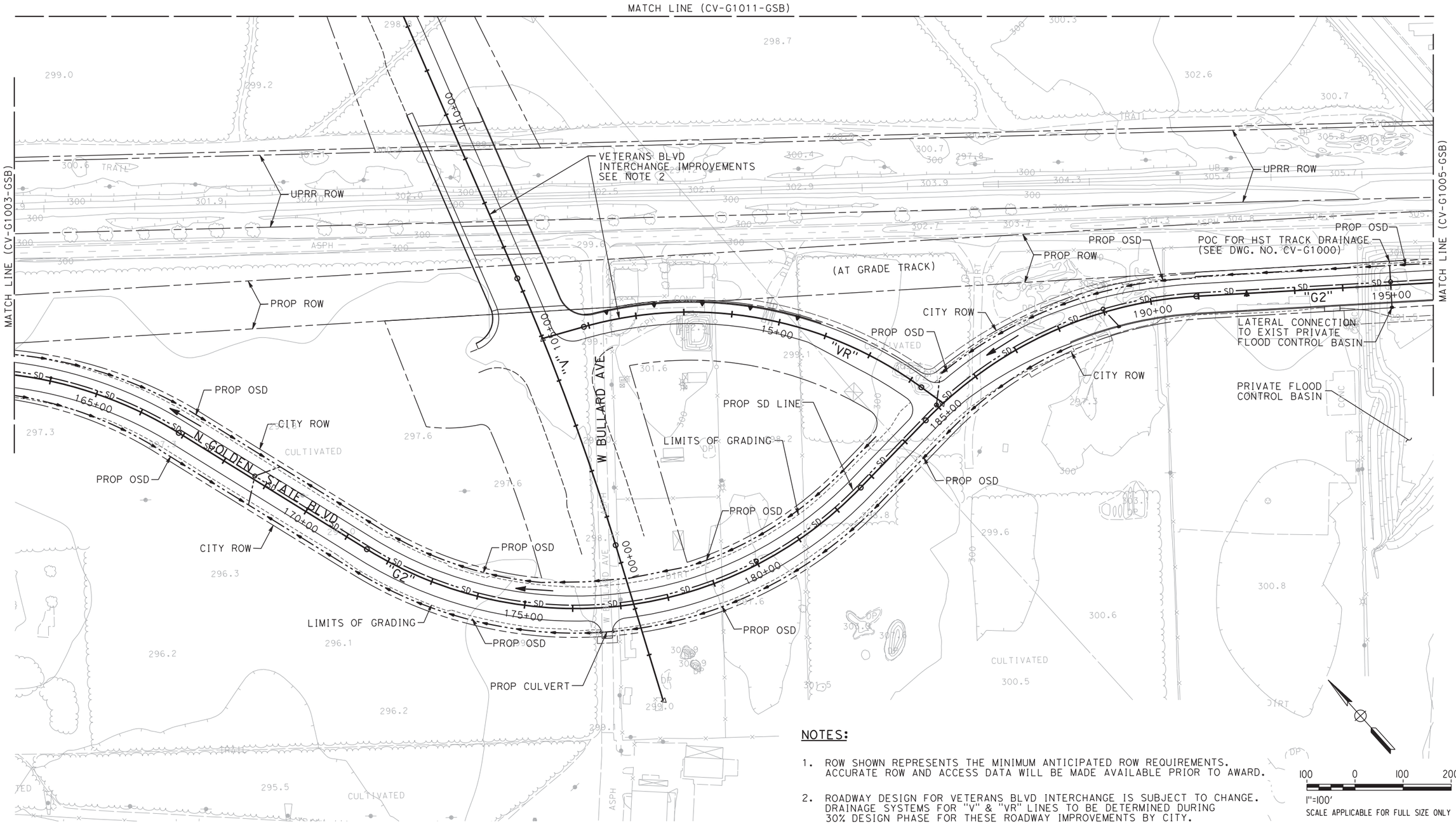

NOTES:

1. ROW SHOWN REPRESENTS THE MINIMUM ANTICIPATED ROW REQUIREMENTS. ACCURATE ROW AND ACCESS DATA WILL BE MADE AVAILABLE PRIOR TO AWARD.
2. ROADWAY DESIGN FOR VETERANS BLVD INTERCHANGE IS SUBJECT TO CHANGE. DRAINAGE SYSTEMS FOR "V" & "VR" LINES TO BE DETERMINED DURING 30% DESIGN PHASE FOR THESE ROADWAY IMPROVEMENTS BY CITY.

100 0 100 200

1"=100'

SCALE APPLICABLE FOR FULL SIZE ONLY

REV	DATE	BY	CHK	APP	DESCRIPTION

DESIGNED BY M. RANDALL
DRAWN BY J. TYLER
CHECKED BY R. HENDERSON
IN CHARGE F. NOBARI
DATE 12/08/11

PROPOSED PRELIMINARY DESIGN

NOT FOR CONSTRUCTION

AECOM Technical Services, Inc.
2020 L Street, Suite 300
Sacramento, CA 95811

CH2MHILL

CALIFORNIA HIGH-SPEED RAIL AUTHORITY

CALIFORNIA HIGH-SPEED TRAIN PROJECT
SIERRA SUBDIVISION
PACKAGE 1A
ROADWAY
GRADING AND DRAINAGE PLAN
GOLDEN STATE BOULEVARD

CONTRACT NO.
DRAWING NO. CV-G1004-GSB
SCALE AS SHOWN
SHEET NO.

imatagi 12/2/2011 11:12:35 AM CAHSRP-r1.tbl CHSR_half_black.plt C:\Users\imatagi\Documents\NDMProj\356751 - California High Speed Rail - SR99 Improvements\1S-CV-G1004-GSB.dgn 12/2/2011 11:12:35 AM

NOTE:

1. ROW SHOWN REPRESENTS THE MINIMUM ANTICIPATED ROW REQUIREMENTS. ACCURATE ROW AND ACCESS DATA WILL BE MADE AVAILABLE PRIOR TO AWARD.

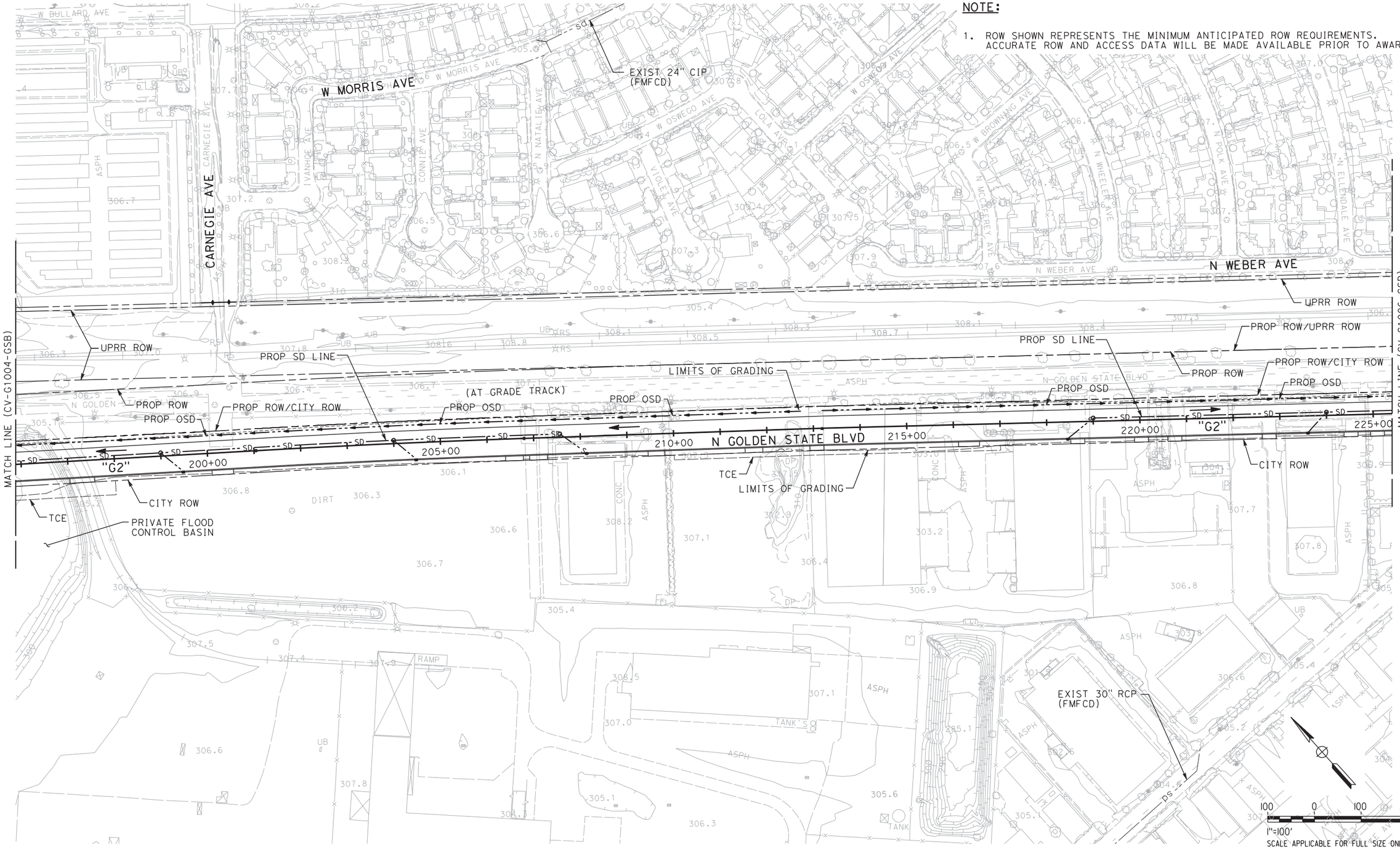

REV	DATE	BY	CHK	APP	DESCRIPTION

DESIGNED BY M. RANDALL
DRAWN BY J. TYLER
CHECKED BY R. HENDERSON
IN CHARGE F. NOBARI
DATE 12/08/11

PROPOSED PRELIMINARY DESIGN

NOT FOR CONSTRUCTION

AECOM Technical Services, Inc.
2020 L Street, Suite 300
Sacramento, CA 95811

CH2MHILL

CALIFORNIA HIGH-SPEED RAIL AUTHORITY

CALIFORNIA HIGH-SPEED TRAIN PROJECT
SIERRA SUBDIVISION
PACKAGE 1A
ROADWAY
GRADING AND DRAINAGE PLAN
GOLDEN STATE BOULEVARD

CONTRACT NO.
DRAWING NO. CV-G1005-GSB
SCALE AS SHOWN
SHEET NO.

imatagi 12/2/2011 11:14:10 AM CAHSRP-r1.tbl CHSR_half_black.plt C:\Users\imatagi\Documents\NDMProj\356751 - California High Speed Rail - SR99 Improvements\1S-CV-G1005-GSB.dgn

NOTE:

1. ROW SHOWN REPRESENTS THE MINIMUM ANTICIPATED ROW REQUIREMENTS. ACCURATE ROW AND ACCESS DATA WILL BE MADE AVAILABLE PRIOR TO AWARD.

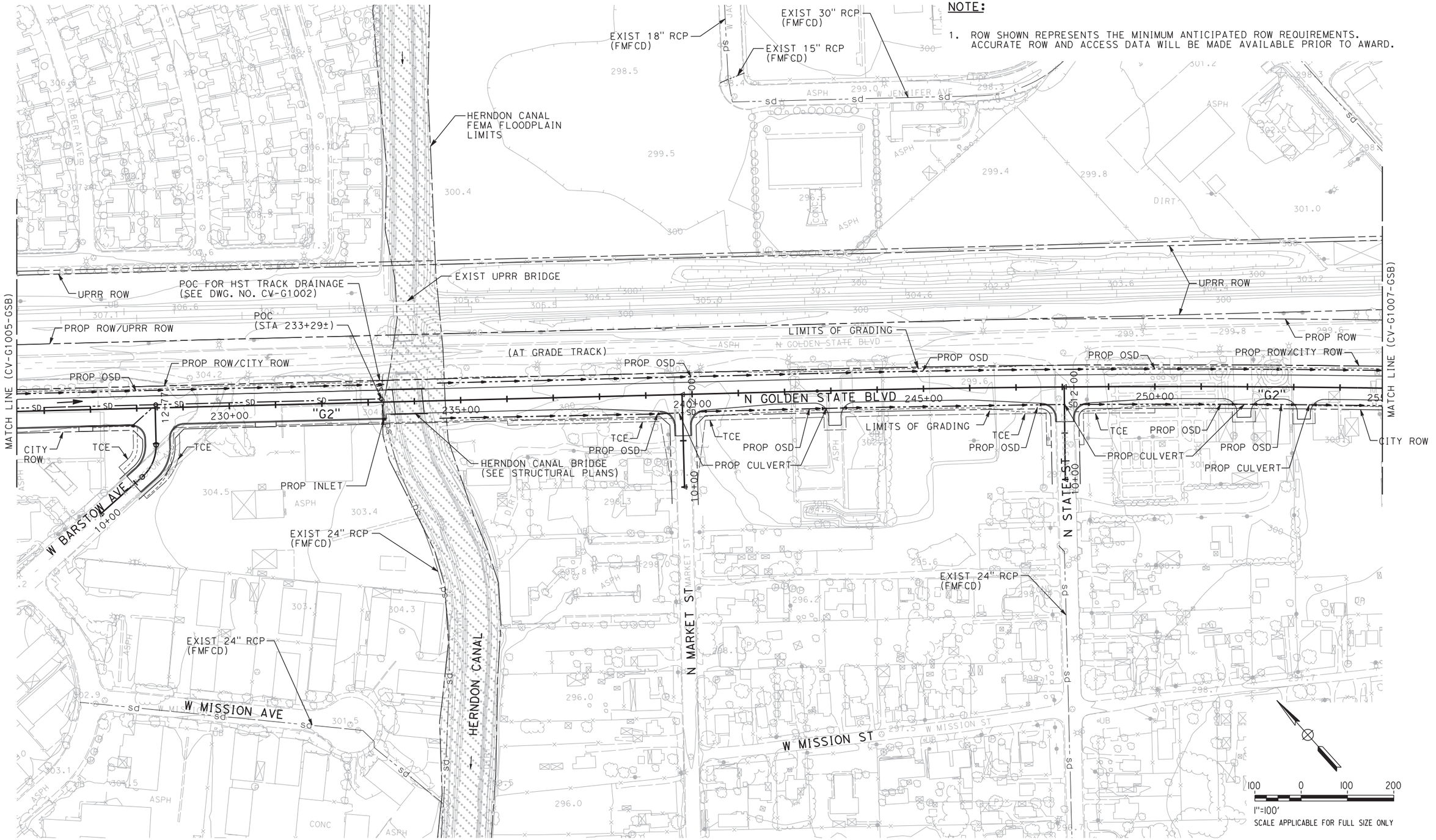

REV	DATE	BY	CHK	APP	DESCRIPTION

DESIGNED BY M. RANDALL
DRAWN BY J. TYLER
CHECKED BY R. HENDERSON
IN CHARGE F. NOBARI
DATE 12/08/11

PROPOSED PRELIMINARY DESIGN

NOT FOR CONSTRUCTION

AECOM Technical Services, Inc.
2020 L Street, Suite 300
Sacramento, CA 95811

CH2MHILL

CALIFORNIA HIGH-SPEED RAIL AUTHORITY

CALIFORNIA HIGH-SPEED TRAIN PROJECT
SIERRA SUBDIVISION
PACKAGE 1A
ROADWAY
GRADING AND DRAINAGE PLAN
GOLDEN STATE BOULEVARD

CONTRACT NO.
DRAWING NO. CV-G1006-GSB
SCALE AS SHOWN
SHEET NO.

imatagi 12/2/2011 11:15:28 AM CAHSRP-r1.tbl CHSR_half_black.plt C:\Users\imatagi\Documents\NDMProj\356751 - California High Speed Rail - SR99 Improvements\1S-CV-G1006-GSB.dgn

NOTE:

1. ROW SHOWN REPRESENTS THE MINIMUM ANTICIPATED ROW REQUIREMENTS. ACCURATE ROW AND ACCESS DATA WILL BE MADE AVAILABLE PRIOR TO AWARD.

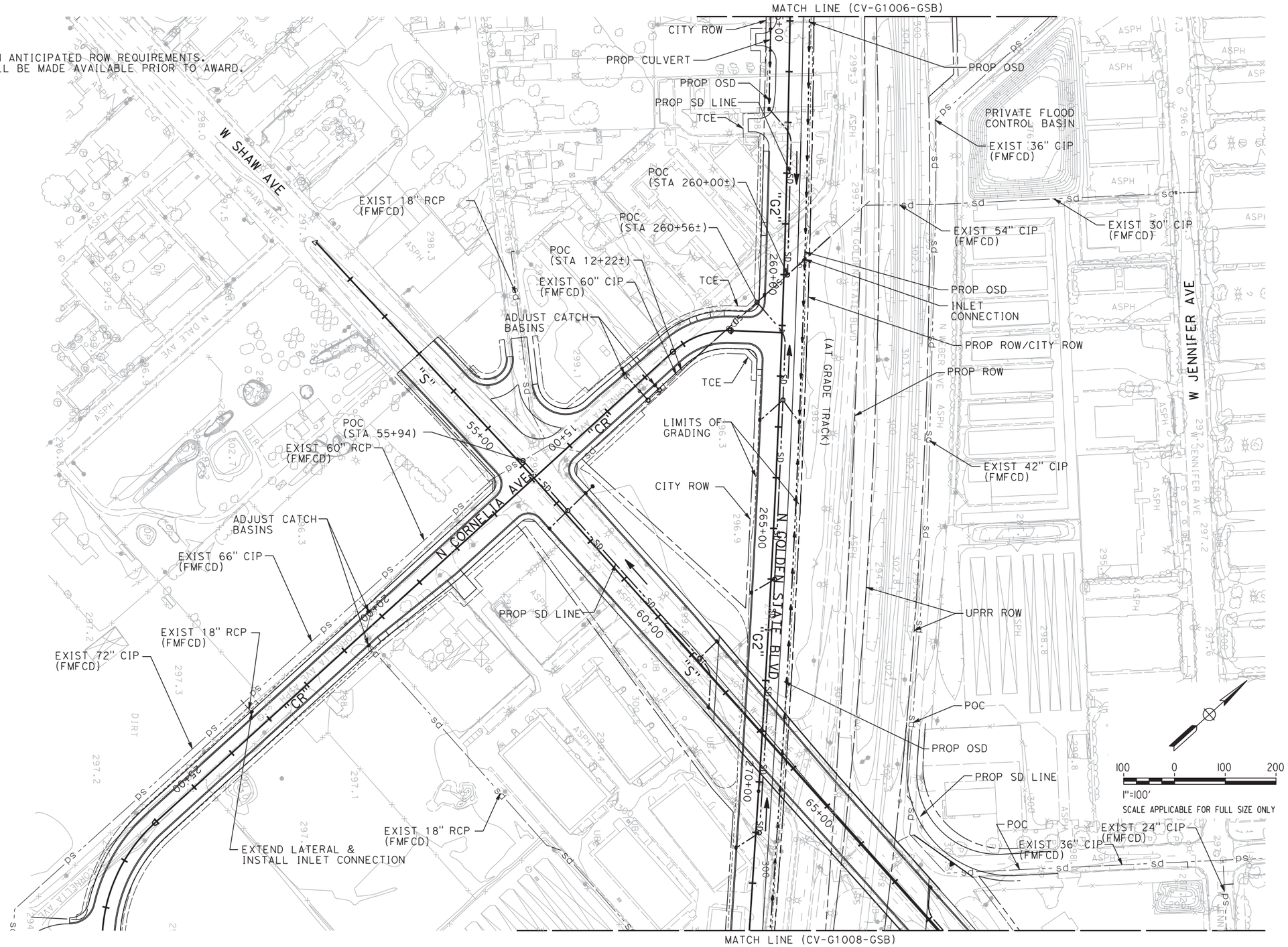

REV	DATE	BY	CHK	APP	DESCRIPTION

DESIGNED BY M. RANDALL
DRAWN BY J. TYLER
CHECKED BY R. HENDERSON
IN CHARGE F. NOBARI
DATE 12/08/11

PROPOSED PRELIMINARY DESIGN

NOT FOR CONSTRUCTION

AECOM Technical Services, Inc.
2020 L Street, Suite 300
Sacramento, CA 95811

CH2MHILL

CALIFORNIA HIGH-SPEED RAIL AUTHORITY

CALIFORNIA HIGH-SPEED TRAIN PROJECT
SIERRA SUBDIVISION
PACKAGE 1A
ROADWAY
GRADING AND DRAINAGE PLAN
GOLDEN STATE BOULEVARD

CONTRACT NO.
DRAWING NO. CV-G1007-GSB
SCALE AS SHOWN
SHEET NO.

imatagi 12/2/2011 11:21:39 AM CAHSRP-r1.tbl CHSR_half_black.plt C:\Users\imatagi\Documents\NDMProj\356751 - California High Speed Rail - SR99 Improvements\1S-CV-G1007-GSB.dgn
12/2/2011 11:21:39 AM

NOTES:

1. ROW SHOWN REPRESENTS THE MINIMUM ANTICIPATED ROW REQUIREMENTS. ACCURATE ROW AND ACCESS DATA WILL BE MADE AVAILABLE PRIOR TO AWARD.
2. PROVIDE DIRECT CONNECTION TO PRIVATE STORM DRAIN AT BASIN.

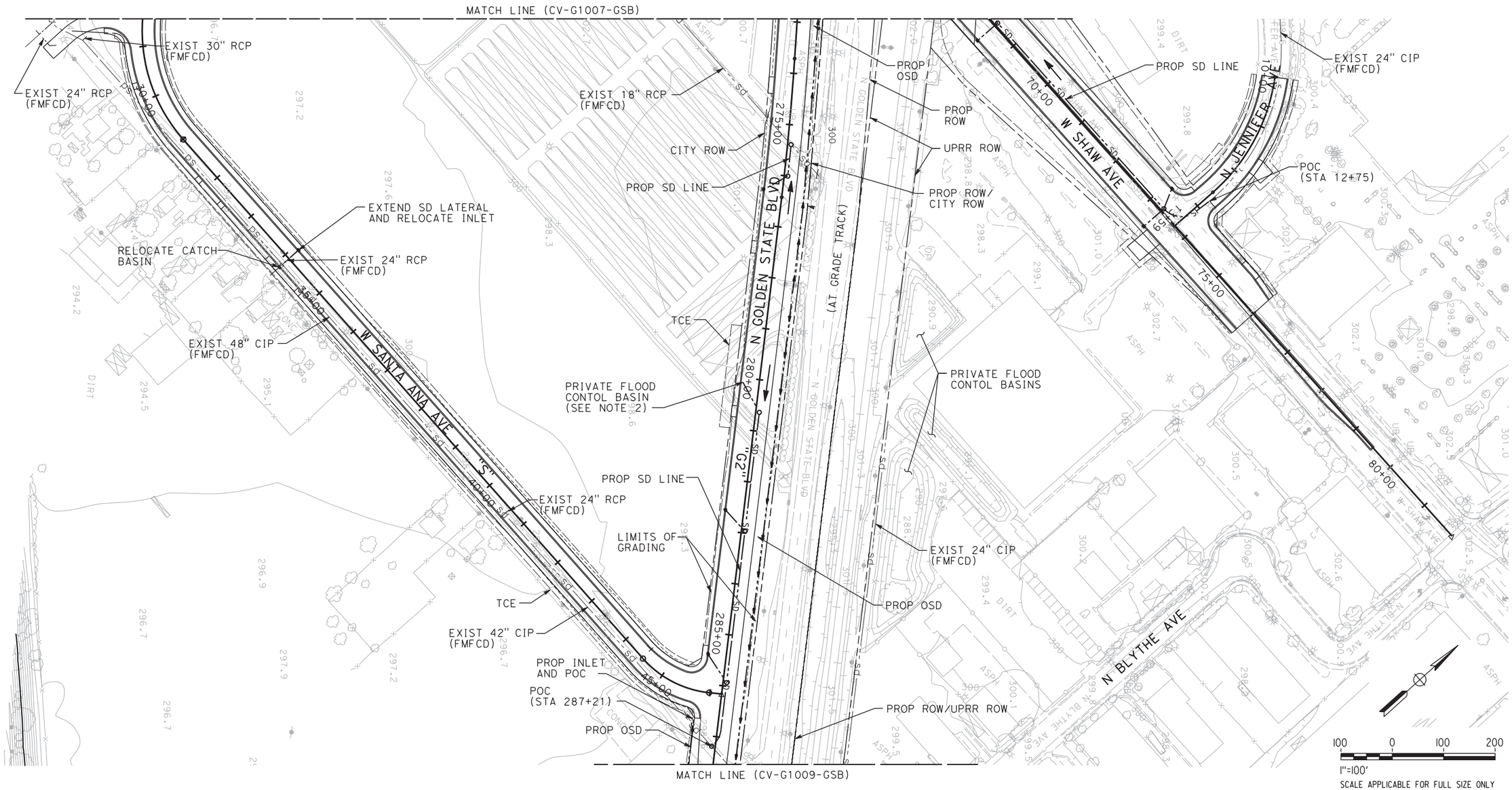

REV	DATE	BY	CHK	APP	DESCRIPTION

DESIGNED BY M. RANDALL
DRAWN BY J. TYLER
CHECKED BY R. HENDERSON
IN CHARGE F. NOBARI
DATE 12/08/11

PROPOSED PRELIMINARY DESIGN

NOT FOR CONSTRUCTION

AECOM Technical Services, Inc.
2020 L Street, Suite 300
Sacramento, CA 95811
CH2MHILL

CALIFORNIA HIGH-SPEED RAIL AUTHORITY

CALIFORNIA HIGH-SPEED TRAIN PROJECT
SIERRA SUBDIVISION
PACKAGE 1A
ROADWAY
GRADING AND DRAINAGE PLAN
GOLDEN STATE BOULEVARD

CONTRACT NO.
DRAWING NO. CV-G1008-GSB
SCALE AS SHOWN
SHEET NO.

imatagi 12/2/2011 11:21:25 AM CAHSRP-r1.tbl CHSR_half_black.plt C:\Users\imatagi\Documents\NDMProj\356751 - California High Speed Rail - SR99 Improvements\1S-CV-G1008-GSB.dgn
12/2/2011 11:21:25 AM

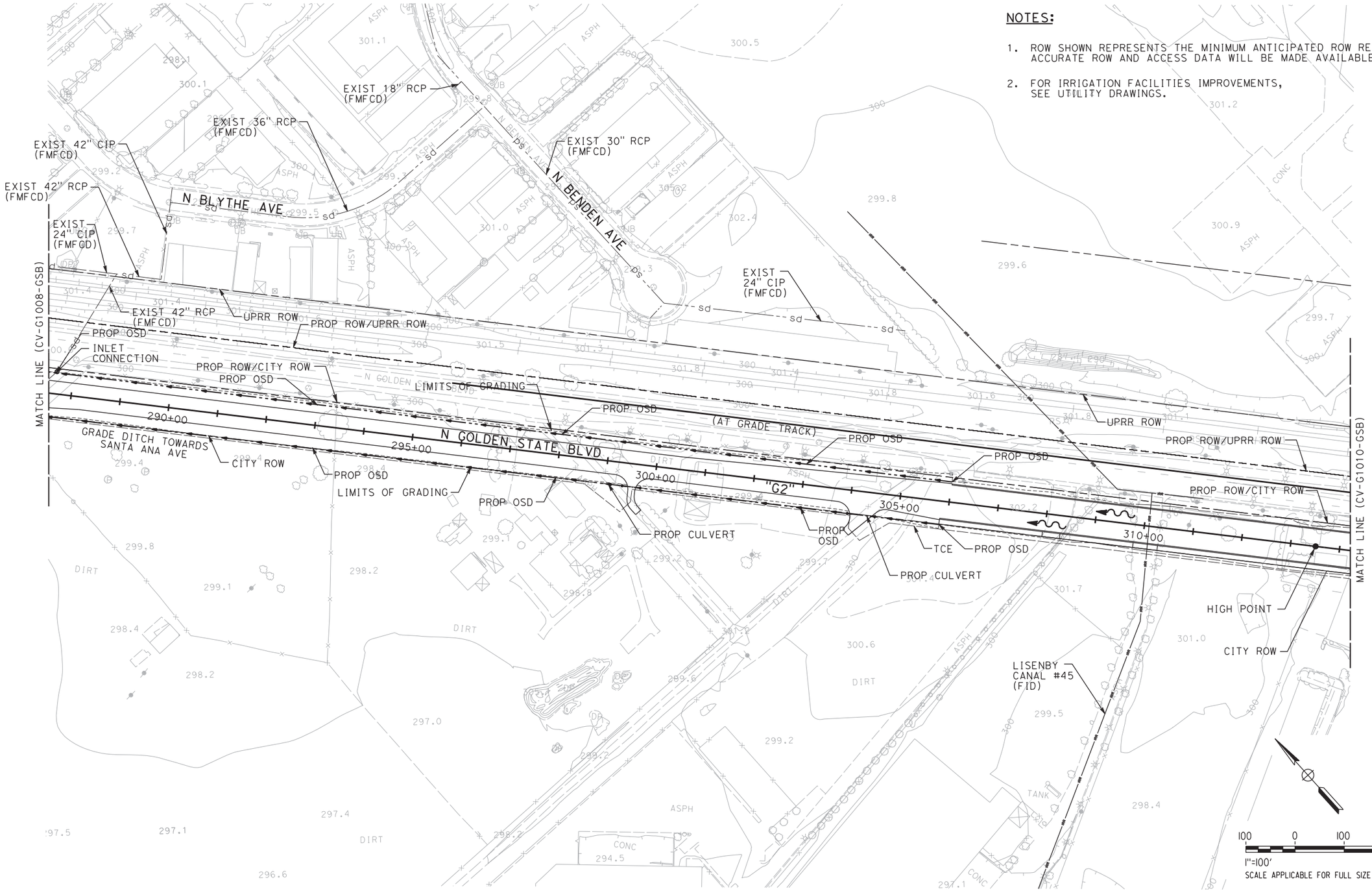

NOTES:

1. ROW SHOWN REPRESENTS THE MINIMUM ANTICIPATED ROW REQUIREMENTS. ACCURATE ROW AND ACCESS DATA WILL BE MADE AVAILABLE PRIOR TO AWARD.
2. FOR IRRIGATION FACILITIES IMPROVEMENTS, SEE UTILITY DRAWINGS.

REV	DATE	BY	CHK	APP	DESCRIPTION

DESIGNED BY M. RANDALL
DRAWN BY J. TYLER
CHECKED BY R. HENDERSON
IN CHARGE F. NOBARI
DATE 12/08/11

PROPOSED PRELIMINARY DESIGN

NOT FOR CONSTRUCTION

AECOM Technical Services, Inc.
2020 L Street, Suite 300
Sacramento, CA 95811
CH2MHILL

CALIFORNIA HIGH-SPEED RAIL AUTHORITY

CALIFORNIA HIGH-SPEED TRAIN PROJECT
SIERRA SUBDIVISION
PACKAGE 1A
ROADWAY
GRADING AND DRAINAGE PLAN
GOLDEN STATE BOULEVARD

CONTRACT NO.
DRAWING NO. CV-G1009-GSB
SCALE AS SHOWN
SHEET NO.

imatagi 12/2/2011 11:18:44 AM CAHSRP-r1.tbl CHSR_half_black.plt C:\Users\imatagi\Documents\NDMProj\356751 - California High Speed Rail - SR99 Improvements\1S-CV-G1009-GSB.dgn
12/2/2011 11:18:44 AM

NOTE:

1. ROW SHOWN REPRESENTS THE MINIMUM ANTICIPATED ROW REQUIREMENTS. ACCURATE ROW AND ACCESS DATA WILL BE MADE AVAILABLE PRIOR TO AWARD.

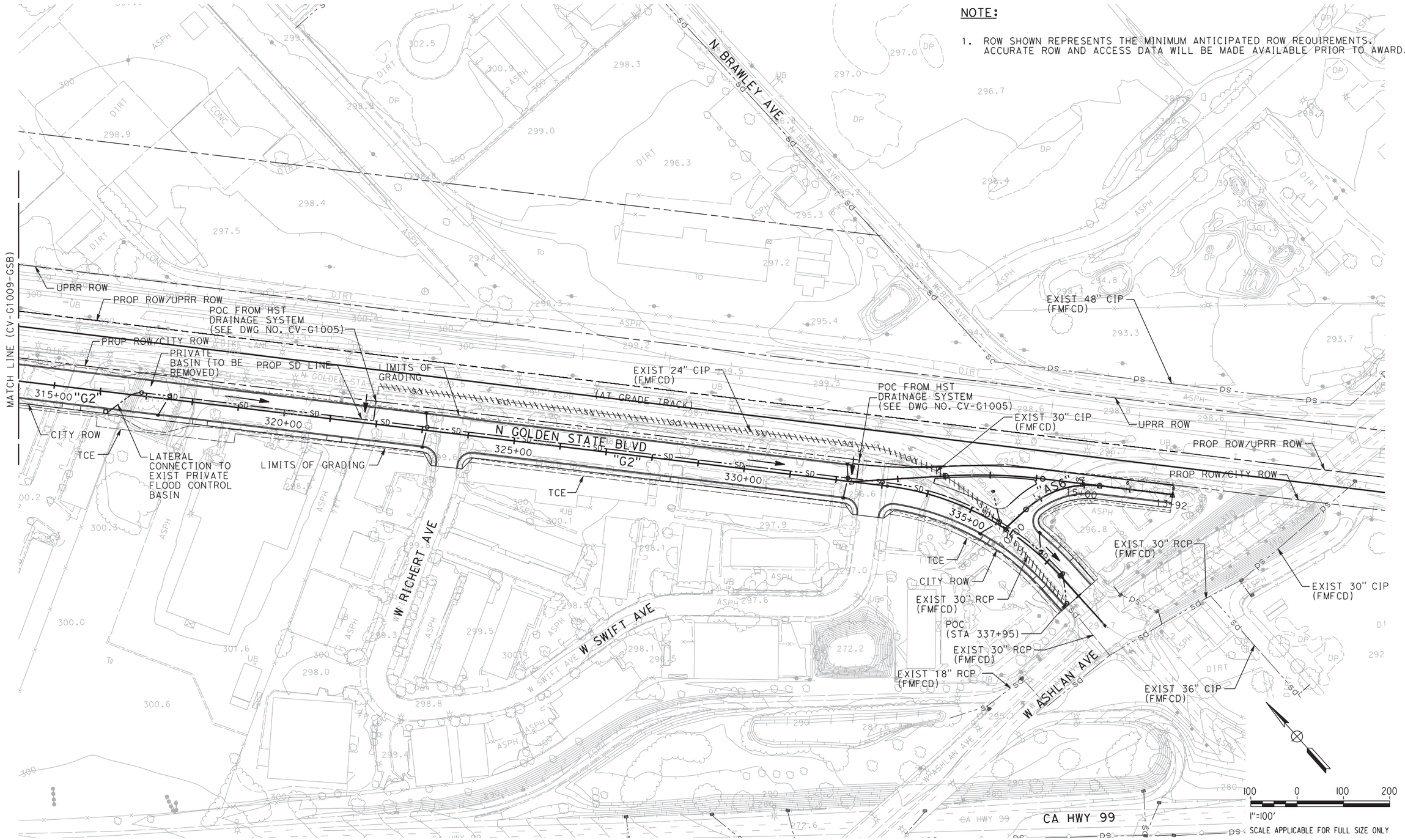

REV	DATE	BY	CHK	APP	DESCRIPTION

DESIGNED BY M. RANDALL
DRAWN BY J. TYLER
CHECKED BY R. HENDERSON
IN CHARGE F. NOBARI
DATE 12/08/11

PROPOSED PRELIMINARY DESIGN

NOT FOR CONSTRUCTION

AECOM Technical Services, Inc.
2020 L Street, Suite 300
Sacramento, CA 95811

CH2MHILL

CALIFORNIA HIGH-SPEED RAIL AUTHORITY

CALIFORNIA HIGH-SPEED TRAIN PROJECT
SIERRA SUBDIVISION
PACKAGE 1A
ROADWAY
GRADING AND DRAINAGE PLAN
GOLDEN STATE BOULEVARD

CONTRACT NO.
DRAWING NO. CV-G1010-GSB
SCALE AS SHOWN
SHEET NO.

imatagi 12/2/2011 11:20:00 AM CAHSRP-r1.tbl CHSR_half_black.plt C:\Users\imatagi\Documents\NDMProj\356751 - California High Speed Rail - SR99 Improvements\1S-CV-G1010-GSB.dgn

NOTES:

1. ROW SHOWN REPRESENTS THE MINIMUM ANTICIPATED ROW REQUIREMENTS. ACCURATE ROW AND ACCESS DATA WILL BE MADE AVAILABLE PRIOR TO AWARD.
2. ROADWAY DESIGN FOR VETERANS BLVD INTERCHANGE IS SUBJECT TO CHANGE. DRAINAGE SYSTEMS FOR "V" & "BU" LINES TO BE DETERMINED DURING 30% DESIGN PHASE FOR THESE ROADWAY IMPROVEMENTS BY CITY.

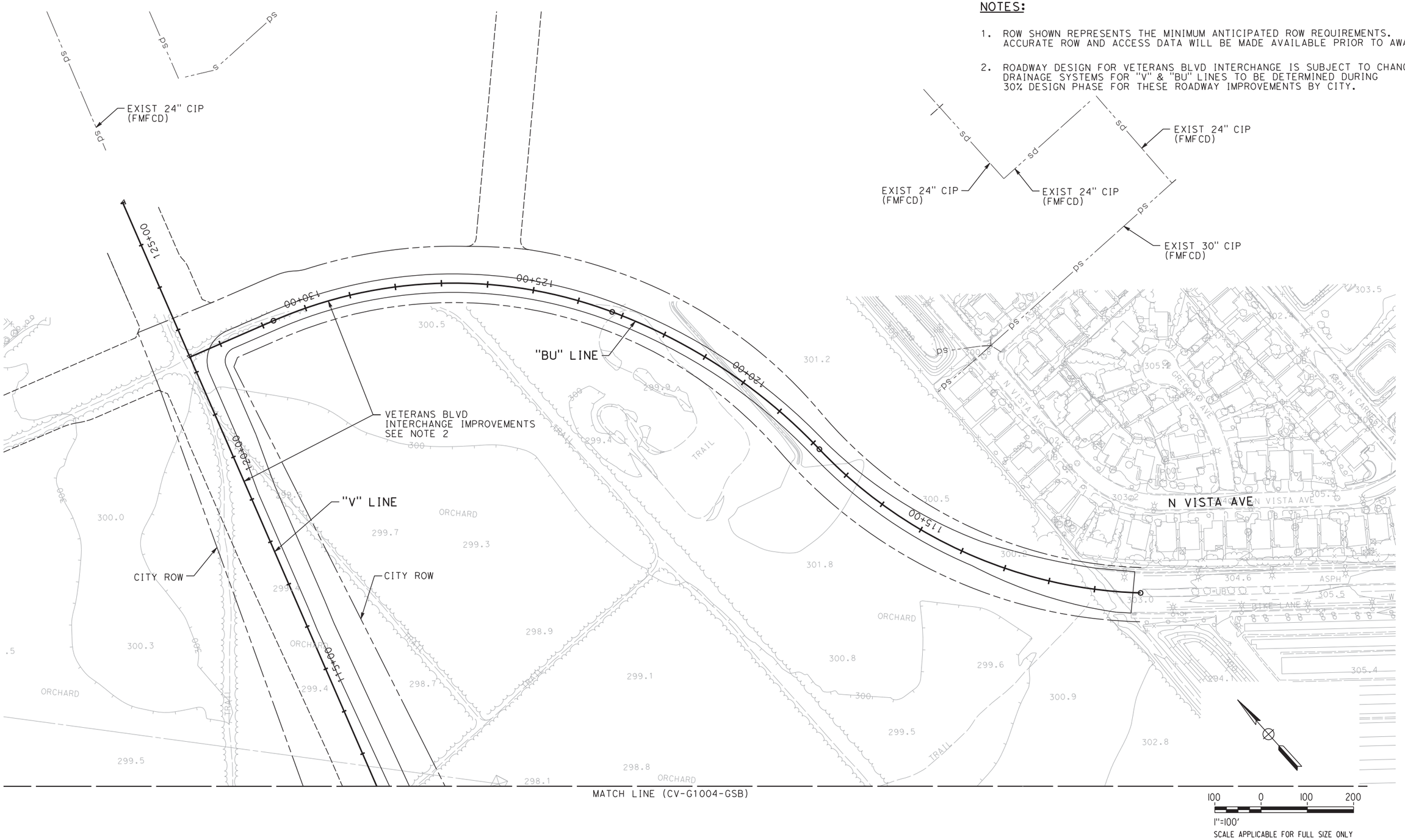

REV	DATE	BY	CHK	APP	DESCRIPTION

DESIGNED BY M. RANDALL
DRAWN BY J. TYLER
CHECKED BY R. HENDERSON
IN CHARGE F. NOBARI
DATE 12/08/11

PROPOSED PRELIMINARY DESIGN

NOT FOR CONSTRUCTION

AECOM Technical Services, Inc.
2020 L Street, Suite 300
Sacramento, CA 95811
CH2MHILL

CALIFORNIA HIGH-SPEED RAIL AUTHORITY

CALIFORNIA HIGH-SPEED TRAIN PROJECT
SIERRA SUBDIVISION
PACKAGE 1A
ROADWAY
GRADING AND DRAINAGE PLAN
GOLDEN STATE BOULEVARD

CONTRACT NO.
DRAWING NO. CV-G1011-GSB
SCALE AS SHOWN
SHEET NO.

imatagi 12/2/2011 11:20:59 AM CAHSRP-r1.tbl CHSR_half_black.plt C:\Users\imatagi\Documents\NDMProj\356751 - California High Speed Rail - SR99 Improvements\1S-CV-G1011-GSB.dgn

LINE DATA

NO.	BEARING	DISTANCE
1	N 25°25'58" W	4814.16'

NOTES:

1. ROW SHOWN REPRESENTS THE MINIMUM ANTICIPATED ROW REQUIREMENTS. ACCURATE ROW AND ACCESS DATA WILL BE MADE AVAILABLE PRIOR TO NOTICE TO PROCEED.
2. SEE DRAINAGE LAYOUT FOR DRAINAGE DETAILS.

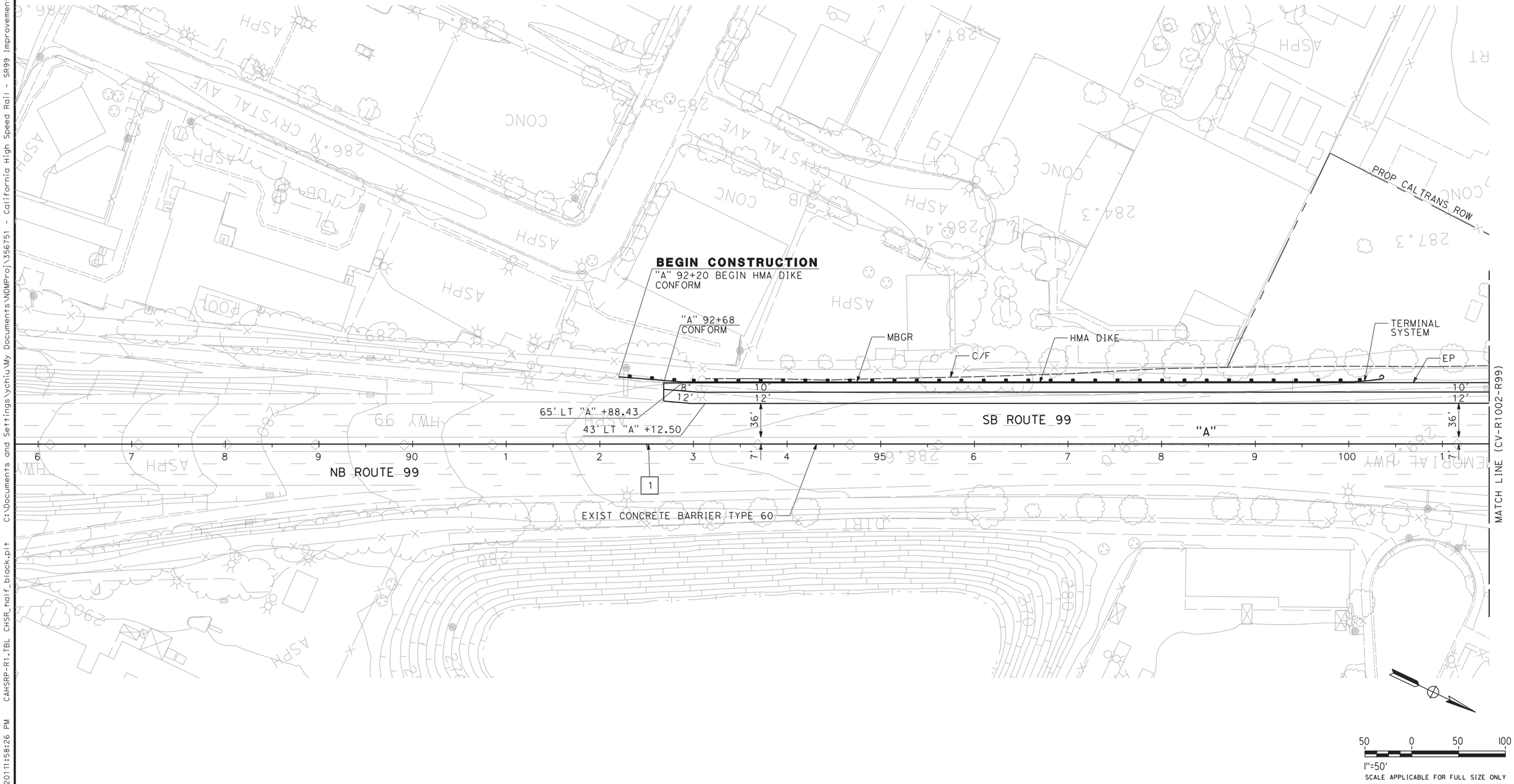

REV	DATE	BY	CHK	APP	DESCRIPTION

DESIGNED BY G. MANOREK
DRAWN BY R. MITRY
CHECKED BY L. HEUSTON
IN CHARGE F. NOBARI
DATE 11/22/11

PROPOSED PRELIMINARY DESIGN

NOT FOR CONSTRUCTION

AECOM Technical Services, Inc.
2020 L Street, Suite 300
Sacramento, CA 95811
CH2MHILL

CALIFORNIA HIGH-SPEED RAIL AUTHORITY

CALIFORNIA HIGH-SPEED TRAIN PROJECT
SIERRA SUBDIVISION
PACKAGE 1A
ROADWAY
LAYOUTS
SR 99 - HIGHWAY

CONTRACT NO.
DRAWING NO. CV-R1001-R99
SCALE AS SHOWN
SHEET NO.

ychiu 11/16/2011 11:58:26 PM CAHSRP-R1.TBL CHSR_half_black.plt C:\Documents and Settings\ychiu\My Documents\NDMProj\356751 - California High Speed Rail - SR99 Improvements\15-CV-R1001-R99.dgn

CURVE DATA

NO.	R	Δ	T	L
1	3000.00′	03°11′29"	83.57′	167.10′

LINE DATA

NO.	BEARING	DISTANCE
1	N 25°25′58" W	4814.16′
2	N 26°34′15" W	300.06′
3	N 29°45′44" W	191.80′

NOTES:

1. ROW SHOWN REPRESENTS THE MINIMUM ANTICIPATED ROW REQUIREMENTS. ACCURATE ROW AND ACCESS DATA WILL BE MADE AVAILABLE PRIOR TO NOTICE TO PROCEED.
2. SEE DRAINAGE LAYOUT FOR DRAINAGE DETAILS.

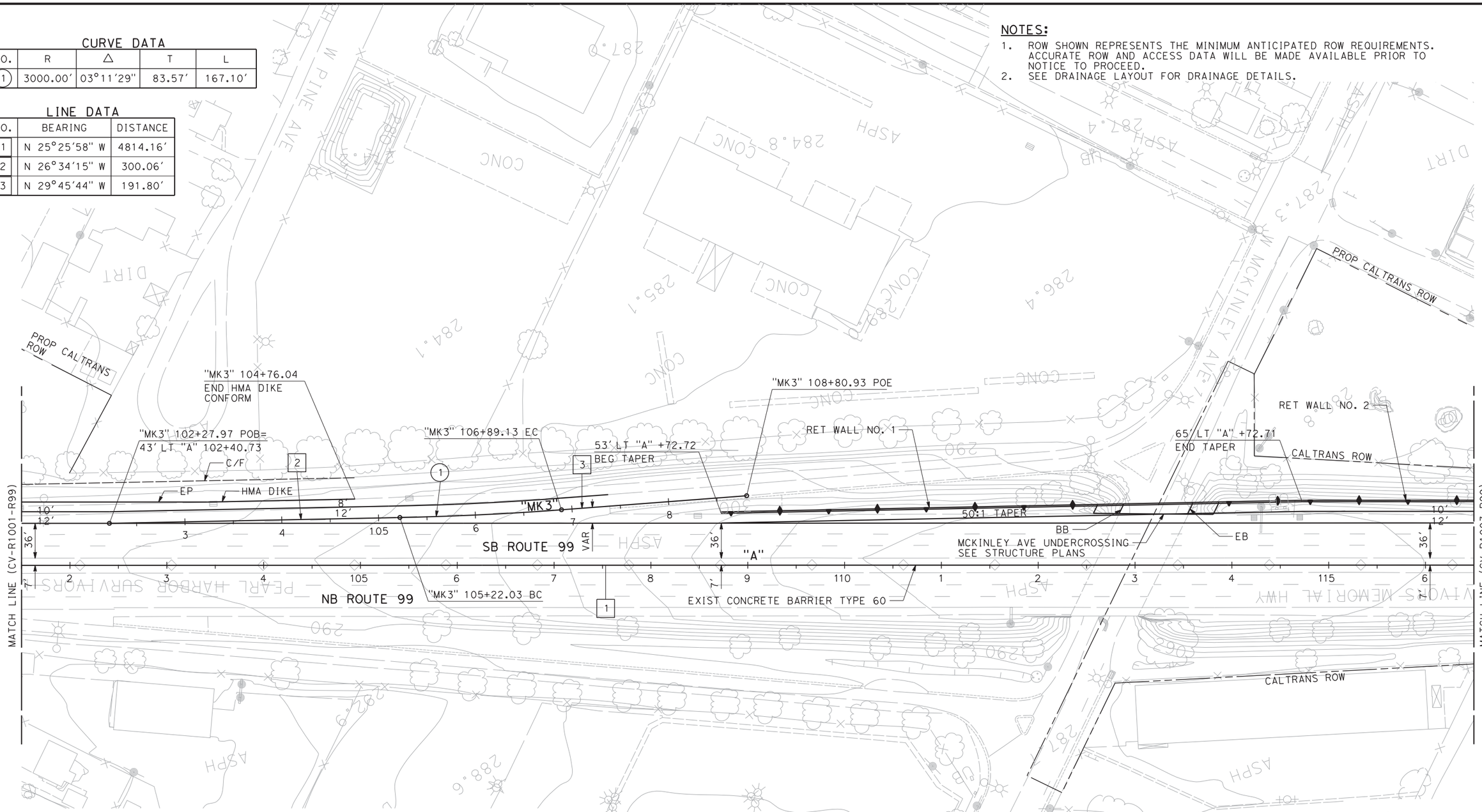

RETAINING WALL DATA

NO.	LOCATIONS		LENGTH	MAX HEIGHT
	BEGIN	END		
1	55.11′ LT "A" 108+72.00	62.84′ LT "A" 112+60.80	389′	8′
2	65.34′ LT "A" 113+86.26	67.12′ LT "A" 119+60.80	574′	10′

REV	DATE	BY	CHK	APP	DESCRIPTION

DESIGNED BY G. MANOREK
DRAWN BY R. MITRY
CHECKED BY L. HEUSTON
IN CHARGE F. NOBARI
DATE 11/22/11

PROPOSED PRELIMINARY DESIGN

NOT FOR CONSTRUCTION

AECOM Technical Services, Inc.
2020 L Street, Suite 300
Sacramento, CA 95811
CH2MHILL

CALIFORNIA HIGH-SPEED RAIL AUTHORITY

CALIFORNIA HIGH-SPEED TRAIN PROJECT
SIERRA SUBDIVISION
PACKAGE 1A
ROADWAY
LAYOUTS
SR 99 - HIGHWAY

CONTRACT NO.
DRAWING NO. CV-R1002-R99
SCALE AS SHOWN
SHEET NO.

ychiu 11/17/2011 9:28:13 AM CAHSRP-R1.TBL CHSR_half_black.plt C:\Documents and Settings\ychiu\My Documents\NDMProj\356751 - California High Speed Rail - SR99 Improvements\15-CV-R1002-R99.dgn

CURVE DATA

NO.	R	Δ	T	L
2	3000.00′	07°52′06"	206.32′	411.98′
3	560.00	34°04′18"	171.59′	333.01′
4	600.00′	32°22′38"	174.19′	339.05′

LINE DATA

NO.	BEARING	DISTANCE
1	N 25°25′58" W	4814.16′
4	N 26°32′49" W	300.14′
5	N 34°24′55" W	290.13′
6	N 20°34′43" W	375.59′
7	N 70°33′04" W	638.18′
8	N 67°30′51" W	361.95′

NOTES:

1. ROW SHOWN REPRESENTS THE MINIMUM ANTICIPATED ROW REQUIREMENTS. ACCURATE ROW AND ACCESS DATA WILL BE MADE AVAILABLE PRIOR TO NOTICE TO PROCEED.
2. SEE DRAWING NO. CV-R1016-R99 FOR WOODSON AND PLEASANT AVE
3. REFER TO CITY OF FRESNO PUBLIC WORKS STANDARD DRAWINGS FOR CUL-DE-SAC DETAILS
4. SEE DRAINAGE LAYOUT FOR DRAINAGE DETAILS.

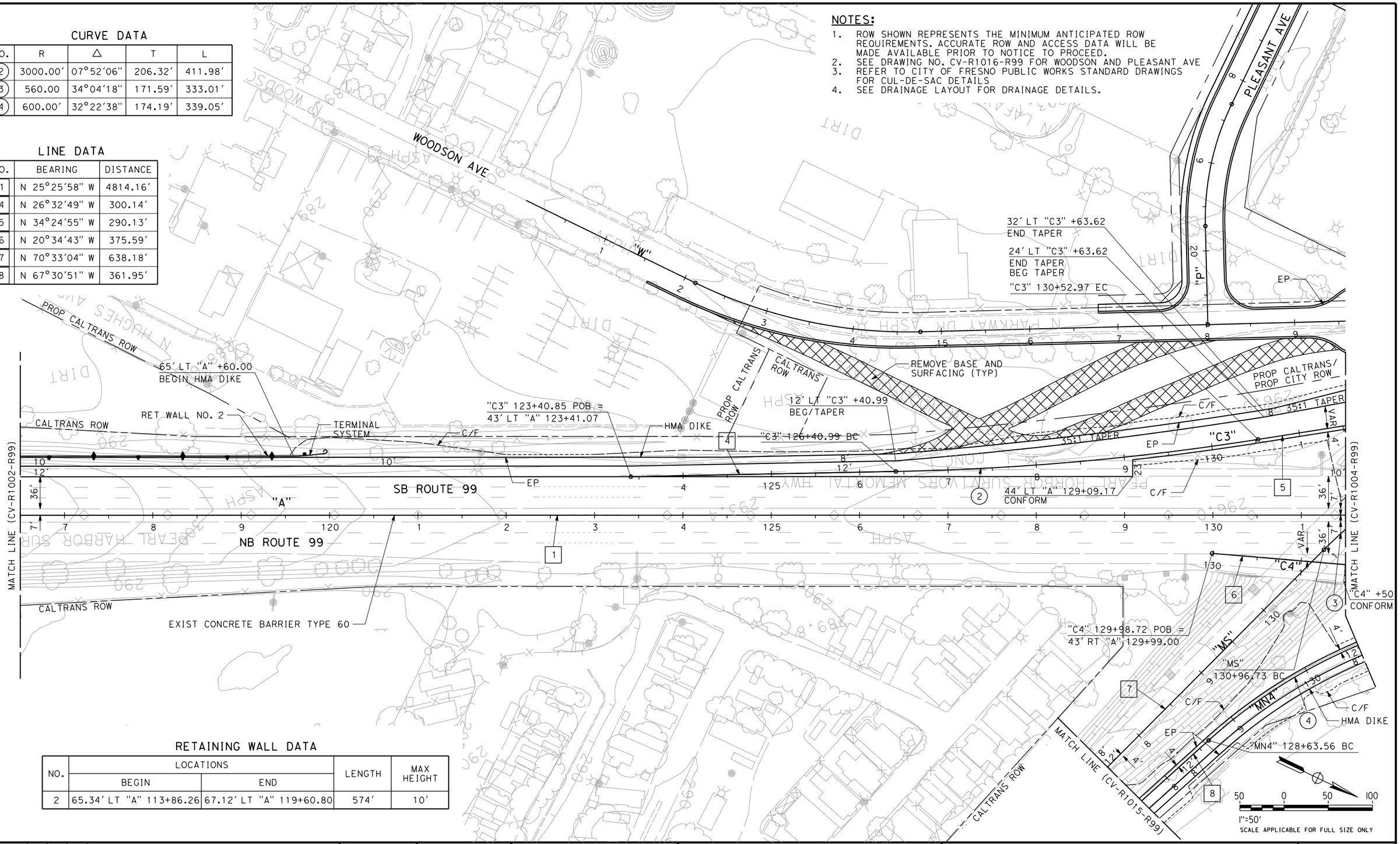

RETAINING WALL DATA

NO.	LOCATIONS		LENGTH	MAX HEIGHT
	BEGIN	END		
2	65.34′ LT "A" 113+86.26	67.12′ LT "A" 119+60.80	574′	10′

REV	DATE	BY	CHK	APP	DESCRIPTION

DESIGNED BY G. MANOREK
DRAWN BY R. MITRY
CHECKED BY L. HEUSTON
IN CHARGE F. NOBARI
DATE 2/17/12

PROPOSED PRELIMINARY DESIGN

NOT FOR CONSTRUCTION

AECOM Technical Services, Inc.
2020 L Street, Suite 300
Sacramento, CA 95811
CH2MHILL

CALIFORNIA HIGH-SPEED RAIL AUTHORITY

CALIFORNIA HIGH-SPEED TRAIN PROJECT
SIERRA SUBDIVISION
PACKAGE 1A
ROADWAY
LAYOUTS
SR 99 - HIGHWAY, RAMPS

CONTRACT NO.
DRAWING NO. CV-R1003-R99
SCALE AS SHOWN
SHEET NO.

2/16/2012 5:29:47 PM CAHSRP-R1.TBL CHSR_half_black.plt C:\Documents and Settings\ychiu\My Documents\NDMProj\356751 - California High Speed Rail - SR99 Improvements\1S-CV-R1003-R99_OPTION ychiu

CURVE DATA

NO.	R	Δ	T	L
3	560.00′	34°04′18"	171.59′	333.01′
4	600.00′	32°22′38"	174.19′	339.05′
5	2450.00′	11°16′05"	241.69′	481.83′
6	230.00′	30°48′31"	63.37′	123.67′
7	1188.00′	27°12′55"	287.58′	564.30′
8	1150.00′	18°00′15"	182.19′	361.37′
9	1350.00′	10°44′34"	126.93′	253.12′
10	8000.00′	01°56′06"	135.11′	270.19′
11	9000.00′	15°37′38"	1235.03′	2454.73′
12	5000.00′	06°00′33"	262.44′	524.40′
13	4500.00′	04°53′29"	192.20′	384.17′
14	955.62′	12°57′45"	108.56′	216.20′
15	5012.00′	00°54′06"	39.43′	78.87′

LINE DATA

NO.	BEARING	DISTANCE
1	N 25°25′58" W	4814.16′
5	N 34°24′55" W	290.13′
6	N 20°34′43" W	375.59′
9	N 45°40′59" W	296.63′
10	N 14°52′28" W	175.45′
11	N 08°57′26" W	104.68′
12	N 36°28′47" W	372.65′
13	N 18°28′31" W	205.86′
14	N 26°35′16" W	278.03′
15	N 34°06′48" W	196.33′
16	N 41°02′30" W	1276.94′

NOTES:

1. ROW SHOWN REPRESENTS THE MINIMUM ANTICIPATED ROW REQUIREMENTS. ACCURATE ROW AND ACCESS DATA WILL BE MADE AVAILABLE PRIOR TO NOTICE TO PROCEED.
2. SEE DRAWING NOS. CV-R1012-R99 AND CV-R1013-R99 FOR CLINTON AVE
3. REFER TO CITY OF FRESNO PUBLIC WORKS STANDARD DRAWINGS FOR CUL-DE-SAC DETAILS
4. FOR RETAINING WALL NOS. 9 & 10 SEE DRAWING CV-R1005-R99
5. FOR RETAINING WALL NOS. 6 & 7 SEE DRAWING CV-R1012-R99
6. SEE TRACK PLANS FOR DETAILS WITHIN HST ROW.
7. SEE DRAINAGE LAYOUT FOR DRAINAGE DETAILS.

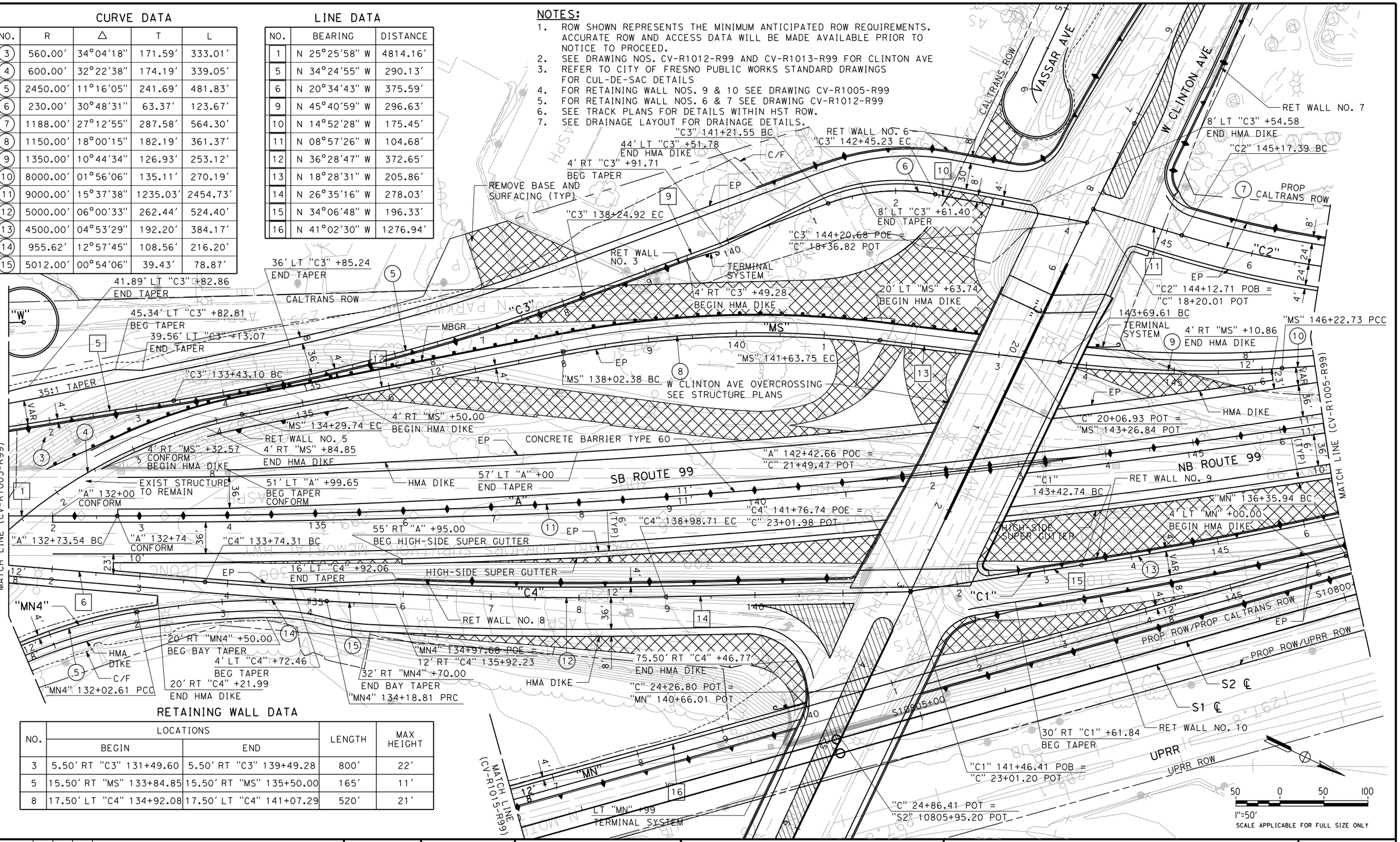

RETAINING WALL DATA

NO.	LOCATIONS		LENGTH	MAX HEIGHT
	BEGIN	END		
3	5.50′ RT "C3" 131+49.60	5.50′ RT "C3" 139+49.28	800′	22′
5	15.50′ RT "MS" 133+84.85	15.50′ RT "MS" 135+50.00	165′	11′
8	17.50′ LT "C4" 134+92.08	17.50′ LT "C4" 141+07.29	520′	21′

REV	DATE	BY	CHK	APP	DESCRIPTION

DESIGNED BY G. MANOREK
DRAWN BY R. MITRY
CHECKED BY L. HEUSTON
IN CHARGE F. NOBARI
DATE 2/17/12

PROPOSED PRELIMINARY DESIGN

NOT FOR CONSTRUCTION

AECOM Technical Services, Inc.
2020 L Street, Suite 300
Sacramento, CA 95811
CH2MHILL

CALIFORNIA HIGH-SPEED RAIL AUTHORITY

CALIFORNIA HIGH-SPEED TRAIN PROJECT
SIERRA SUBDIVISION
PACKAGE 1A
ROADWAY
LAYOUTS
SR 99 - HIGHWAY, RAMPS

CONTRACT NO.
DRAWING NO. CV-R1004-R99
SCALE AS SHOWN
SHEET NO.

ychiu 2/16/2012 3:39:51 PM CAHSRP-R1.TBL CHSR_half_black.plt C:\Documents and Settings\ychiu\My Documents\NDMProj\356751 - California High Speed Rail - SR99 Improvements\15-CV-R1004-R99_OPTION

CURVE DATA

NO.	R	Δ	T	L
7	1188.00′	27°12′55"	287.58′	564.30′
10	8000.00′	01°56′06"	135.11′	270.19′
11	9000.00′	15°37′38"	1235.03′	2454.73′
13	4500.00′	04°53′29"	192.20′	384.17′
16	14000.00′	03°10′58"	388.95′	777.70′
17	10000.00′	02°25′22"	211.47′	422.87′
18	20000.00′	01°16′38"	222.91′	445.80′

LINE DATA

NO.	BEARING	DISTANCE
17	N 36°10′22" W	907.64′
18	N 41°03′36" W	6610.02′
19	N 42°11′15" W	309.16′

NOTES:

1. ROW SHOWN REPRESENTS THE MINIMUM ANTICIPATED ROW REQUIREMENTS. ACCURATE ROW AND ACCESS DATA WILL BE MADE AVAILABLE PRIOR TO NOTICE TO PROCEED.
2. SEE TRACK PLANS FOR DETAILS WITHIN HST ROW.
3. SEE DRAINAGE LAYOUT FOR DRAINAGE DETAILS.

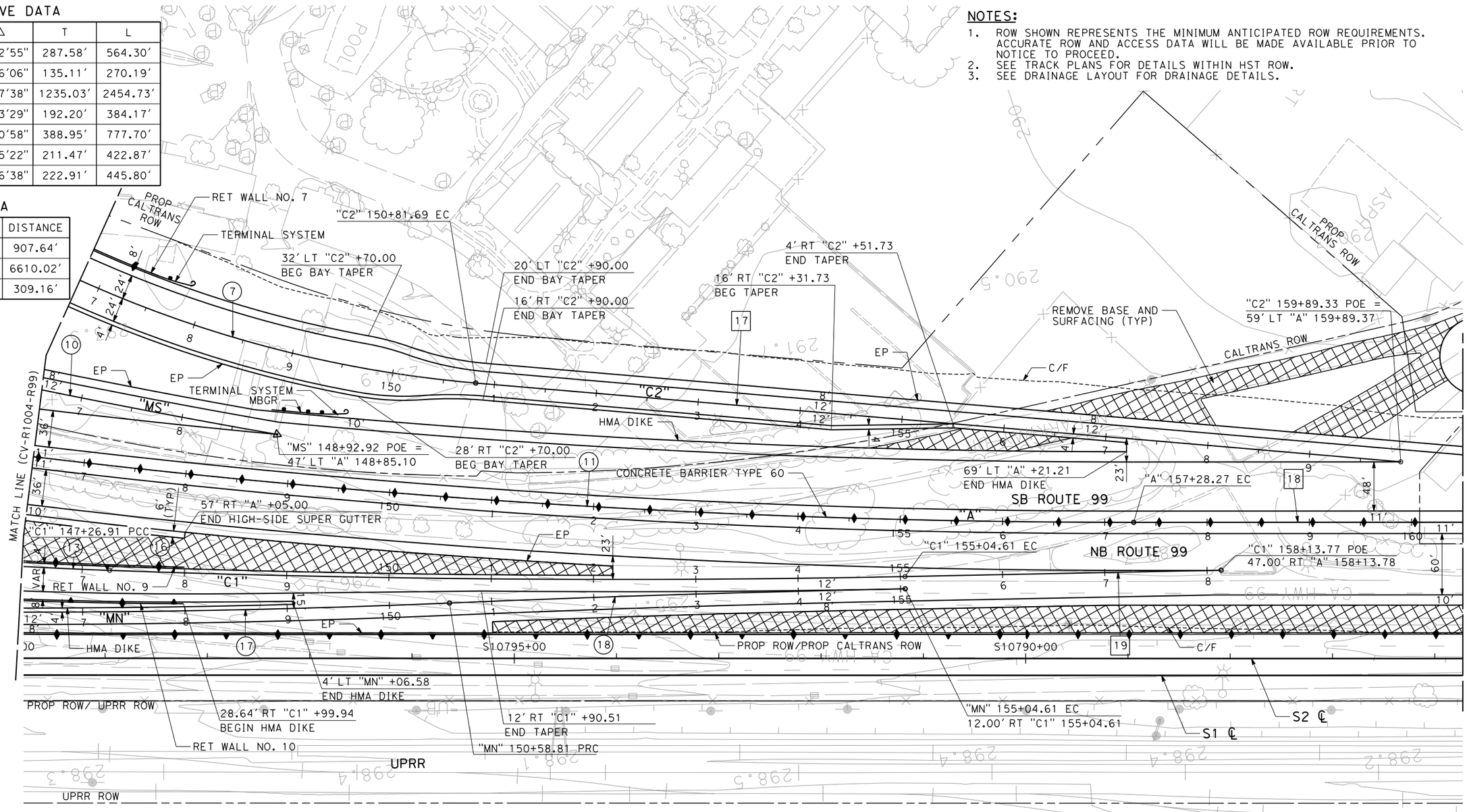

RETAINING WALL DATA

NO.	LOCATIONS		LENGTH	MAX HEIGHT
	BEGIN	END		
7	44.64′ LT "C" 14+48.15	33.50′ LT "C2" 147+50.00	564′	18′
9	10.00′ LT "C1" 142+37.16	5.50′ LT "C1" 148+00.00	563′	16′
10	44.00′ RT "C1" 142+14.31	30.14′ RT "C1" 148+00.00	589′	20′

50 0 50 100
1"=50′
SCALE APPLICABLE FOR FULL SIZE ONLY

REV	DATE	BY	CHK	APP	DESCRIPTION

DESIGNED BY G. MANOREK
DRAWN BY R. MITRY
CHECKED BY L. HEUSTON
IN CHARGE F. NOBARI
DATE 2/17/12

PROPOSED PRELIMINARY DESIGN

NOT FOR CONSTRUCTION

AECOM Technical Services, Inc.
2020 L Street, Suite 300
Sacramento, CA 95811
CH2MHILL

CALIFORNIA HIGH-SPEED RAIL AUTHORITY

CALIFORNIA HIGH-SPEED TRAIN PROJECT
SIERRA SUBDIVISION
PACKAGE 1A
ROADWAY
LAYOUTS
SR 99 - HIGHWAY, RAMPS

CONTRACT NO.
DRAWING NO. CV-R1005-R99
SCALE AS SHOWN
SHEET NO.

2/16/2012 4:03:41 PM CAHSRP-R1.TBL CHSR_half_black.plt C:\Documents and Settings\ychiu\My Documents\NDMProj\356751 - California High Speed Rail - SR99 Improvements\15-CV-R1005-R99_OPTION ychiu

CURVE DATA

NO.	R	Δ	T	L
43	550.00′	24°14′15″	118.10′	232.66′

LINE DATA

NO.	BEARING	DISTANCE
18	N 41°03′36″ W	6610.02′
50	S 89°27′19″ E	108.92′
51	N 42°03′37″ W	169.87′

NOTES:

1. ROW SHOWN REPRESENTS THE MINIMUM ANTICIPATED ROW REQUIREMENTS. ACCURATE ROW AND ACCESS DATA WILL BE MADE AVAILABLE PRIOR TO NOTICE TO PROCEED.
2. REFER TO CITY OF FRESNO PUBLIC WORKS STANDARD DRAWINGS FOR CUL-DE-SAC DETAILS
3. SEE TRACK PLANS FOR DETAILS WITHIN HST ROW.
4. SEE DRAINAGE LAYOUT FOR DRAINAGE DETAILS.

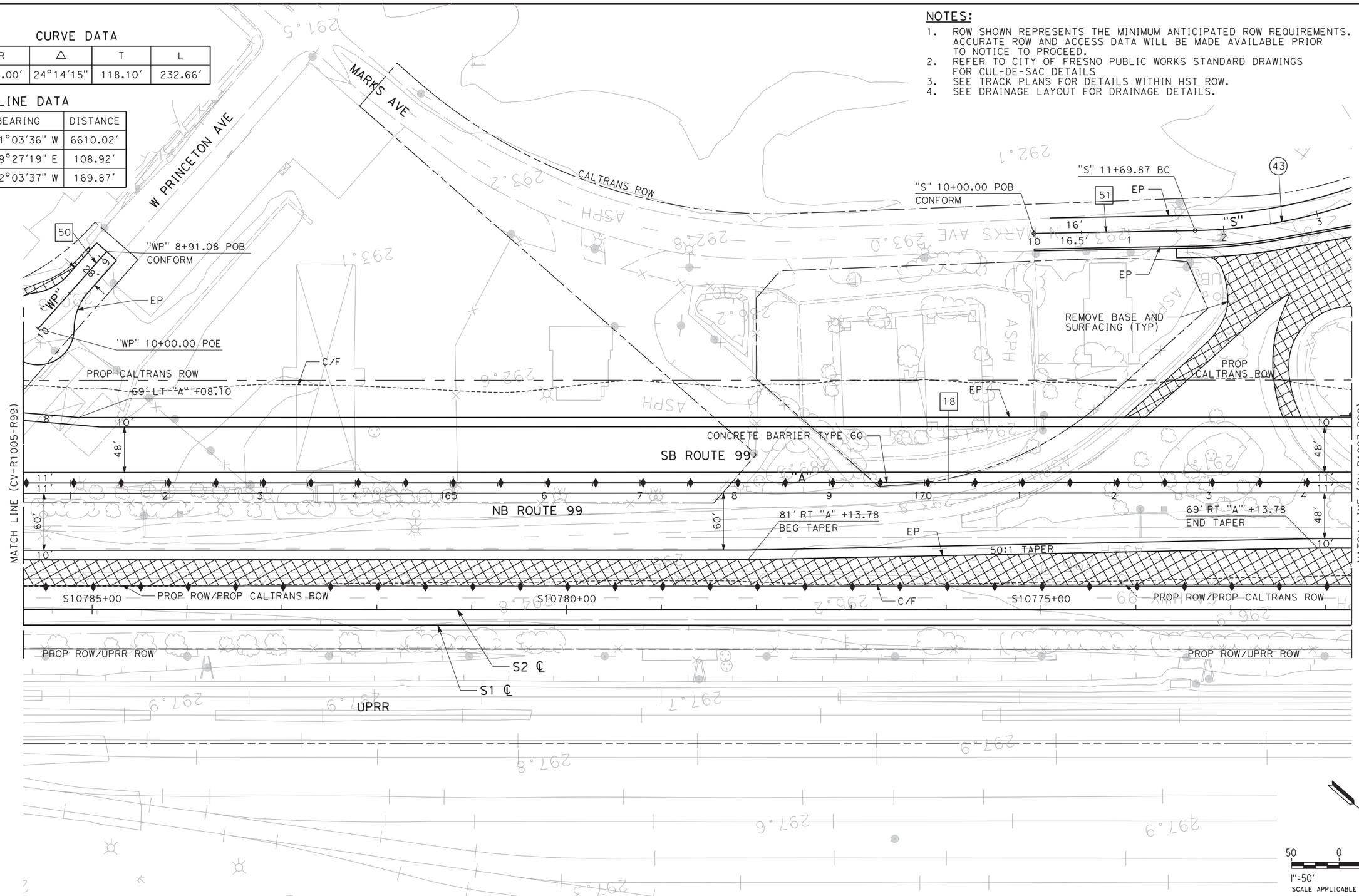

REV	DATE	BY	CHK	APP	DESCRIPTION

DESIGNED BY G. MANOREK
DRAWN BY R. MITRY
CHECKED BY L. HEUSTON
IN CHARGE F. NOBARI
DATE 11/22/11

PROPOSED PRELIMINARY DESIGN

NOT FOR CONSTRUCTION

AECOM Technical Services, Inc.
2020 L Street, Suite 300
Sacramento, CA 95811
CH2MHILL

CALIFORNIA HIGH-SPEED RAIL AUTHORITY

CALIFORNIA HIGH-SPEED TRAIN PROJECT
SIERRA SUBDIVISION
PACKAGE 1A
ROADWAY
LAYOUTS
SR 99 - HIGHWAY, LOCAL ROADS

CONTRACT NO.
DRAWING NO. CV-R1006-R99
SCALE AS SHOWN
SHEET NO.

ychiu 11/17/2011 9:31:04 AM CAHSRP-R1.TBL CHSR_half_black.plt C:\Documents and Settings\ychiu\My Documents\NDMProj\356751 - California High Speed Rail - SR99 Improvements\15-CV-R1006-R99.dgn

CURVE DATA

NO.	R	Δ	T	L
43	550.00′	24°14′15"	118.10′	232.66′
44	1000.00′	09°24′27"	82.28′	164.19′
45	800.00′	32°58′16"	236.75′	460.36′
46	479.50′	17°50′40"	75.28′	149.34′

LINE DATA

NO.	BEARING	DISTANCE
18	N 41°03′36" W	6610.02′
52	N 66°17′53" W	206.68′
53	N 56°53′26" W	90.64′
54	N 89°51′42" W	538.36′
55	N 09°31′58" E	16.76′

NOTES:

1. ROW SHOWN REPRESENTS THE MINIMUM ANTICIPATED ROW REQUIREMENTS. ACCURATE ROW AND ACCESS DATA WILL BE MADE AVAILABLE PRIOR TO NOTICE TO PROCEED.
2. REFER TO CITY OF FRESNO PUBLIC WORKS STANDARD DRAWINGS FOR CUL-DE-SAC DETAILS
3. SEE TRACK PLANS FOR DETAILS WITHIN HST ROW.
4. SEE DRAINAGE LAYOUT FOR DRAINAGE DETAILS.

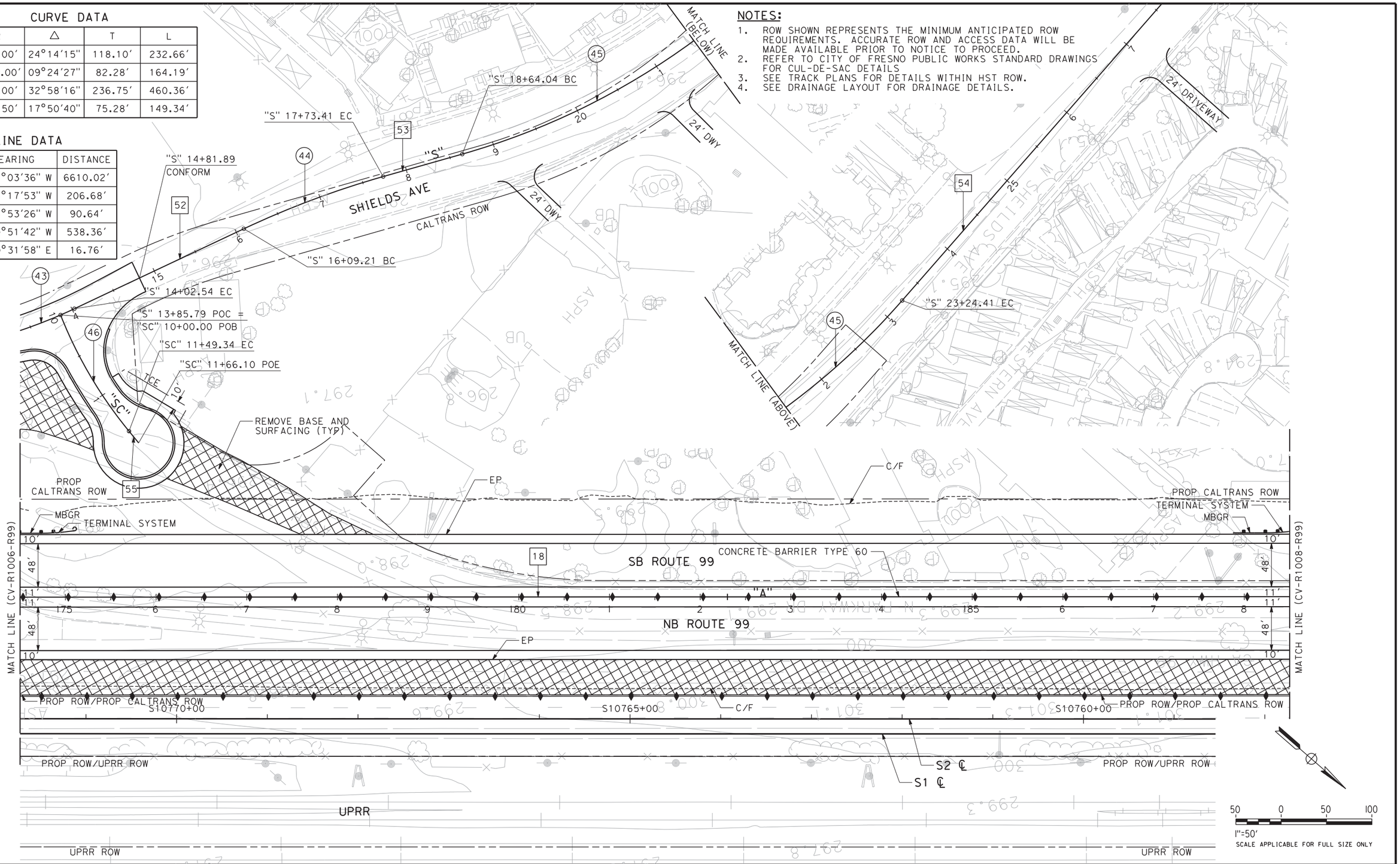

REV	DATE	BY	CHK	APP	DESCRIPTION

DESIGNED BY G. MANOREK
DRAWN BY R. MITRY
CHECKED BY L. HEUSTON
IN CHARGE F. NOBARI
DATE 11/22/11

PROPOSED PRELIMINARY DESIGN

NOT FOR CONSTRUCTION

AECOM Technical Services, Inc.
2020 L Street, Suite 300
Sacramento, CA 95811
CH2MHILL

CALIFORNIA HIGH-SPEED RAIL AUTHORITY

CALIFORNIA HIGH-SPEED TRAIN PROJECT
SIERRA SUBDIVISION
PACKAGE 1A
ROADWAY
LAYOUTS
SR 99 - HIGHWAY, LOCAL ROADS

CONTRACT NO.
DRAWING NO. CV-R1007-R99
SCALE AS SHOWN
SHEET NO.

ychiu 11/16/2011 2:18:17 PM CAHSRP-R1.TBL CHSR_half_black.plt C:\Documents and Settings\ychiu\My Documents\NDMProj\356751 - California High Speed Rail - SR99 Improvements\15-CV-R1007-R99.dgn

LINE DATA

NO.	BEARING	DISTANCE
18	N 41°03'36" W	6610.02'

NOTES:

1. ROW SHOWN REPRESENTS THE MINIMUM ANTICIPATED ROW REQUIREMENTS. ACCURATE ROW AND ACCESS DATA WILL BE MADE AVAILABLE PRIOR TO NOTICE TO PROCEED.
2. SEE TRACK PLANS FOR DETAILS WITHIN HST ROW.
3. SEE DRAINAGE LAYOUT FOR DRAINAGE DETAILS.

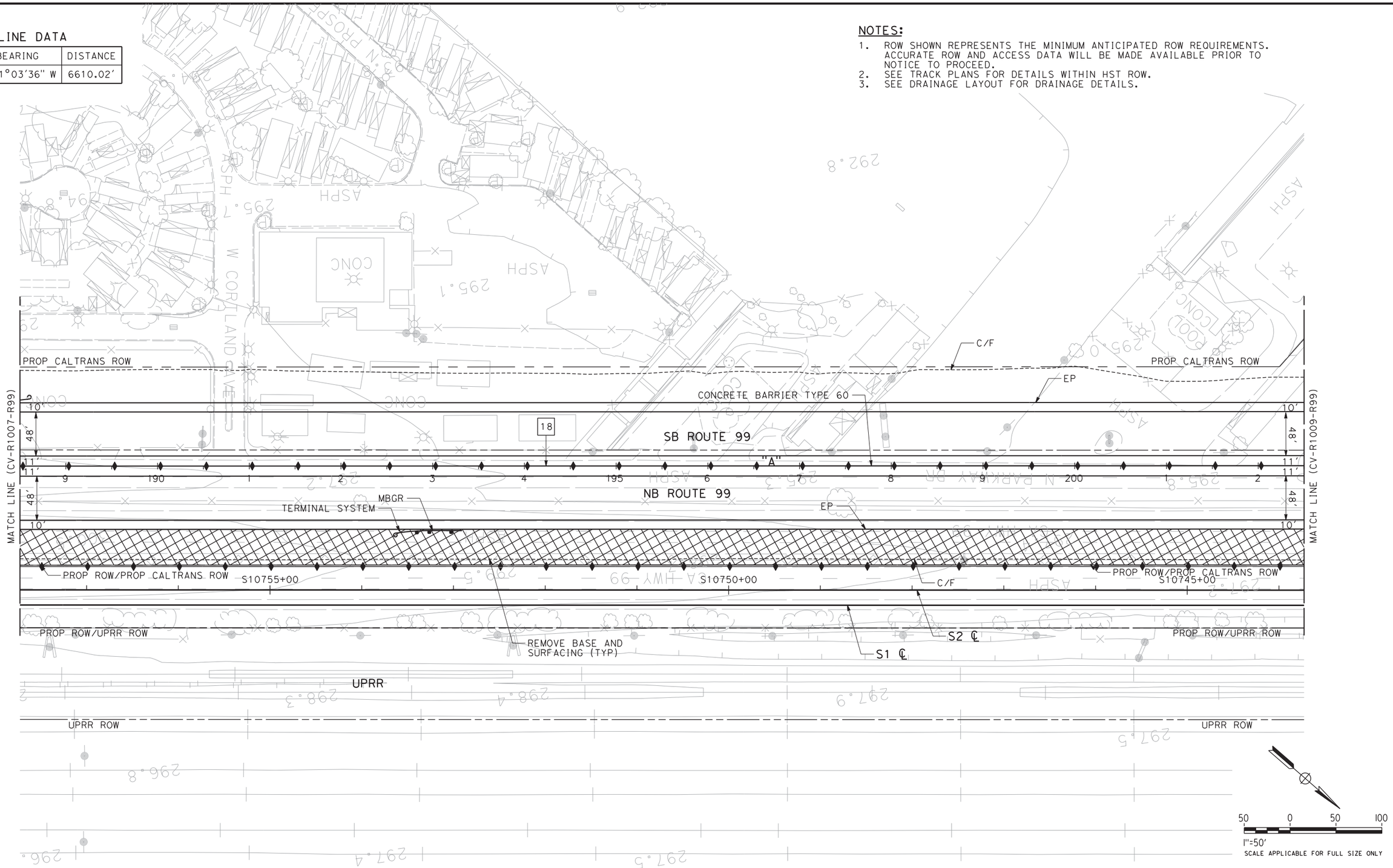

REV	DATE	BY	CHK	APP	DESCRIPTION

DESIGNED BY G. MANOREK
DRAWN BY R. MITRY
CHECKED BY L. HEUSTON
IN CHARGE F. NOBARI
DATE 11/22/11

PROPOSED PRELIMINARY DESIGN

NOT FOR CONSTRUCTION

AECOM Technical Services, Inc.
2020 L Street, Suite 300
Sacramento, CA 95811
CH2MHILL

CALIFORNIA HIGH-SPEED RAIL AUTHORITY

CALIFORNIA HIGH-SPEED TRAIN PROJECT
SIERRA SUBDIVISION
PACKAGE 1A
ROADWAY
LAYOUTS
SR 99 - HIGHWAY

CONTRACT NO.
DRAWING NO. CV-R1008-R99
SCALE AS SHOWN
SHEET NO.

ychiu 11/16/2011 2:18:39 PM CAHSRP-R1.TBL CHSR_half_black.plt C:\Documents and Settings\ychiu\My Documents\NDMProj\356751 - California High Speed Rail - SR99 Improvements\15-CV-R1008-R99.dgn

CURVE DATA

NO.	R	Δ	T	L
19	740.00′	90°41′09"	748.91′	1171.25′
47	150.00′	52°14′59"	73.57′	136.79′

LINE DATA

NO.	BEARING	DISTANCE
18	N 41°03′36" W	6610.02′
20	N 89°48′36" W	74.45′
56	N 11°11′23" E	64.36′
57	N 41°03′36" W	246.01′

NOTES:

1. ROW SHOWN REPRESENTS THE MINIMUM ANTICIPATED ROW REQUIREMENTS. ACCURATE ROW AND ACCESS DATA WILL BE MADE AVAILABLE PRIOR TO NOTICE TO PROCEED.
2. SEE TRACK PLANS FOR DETAILS WITHIN HST ROW.
3. SEE DRAINAGE LAYOUT FOR DRAINAGE DETAILS.

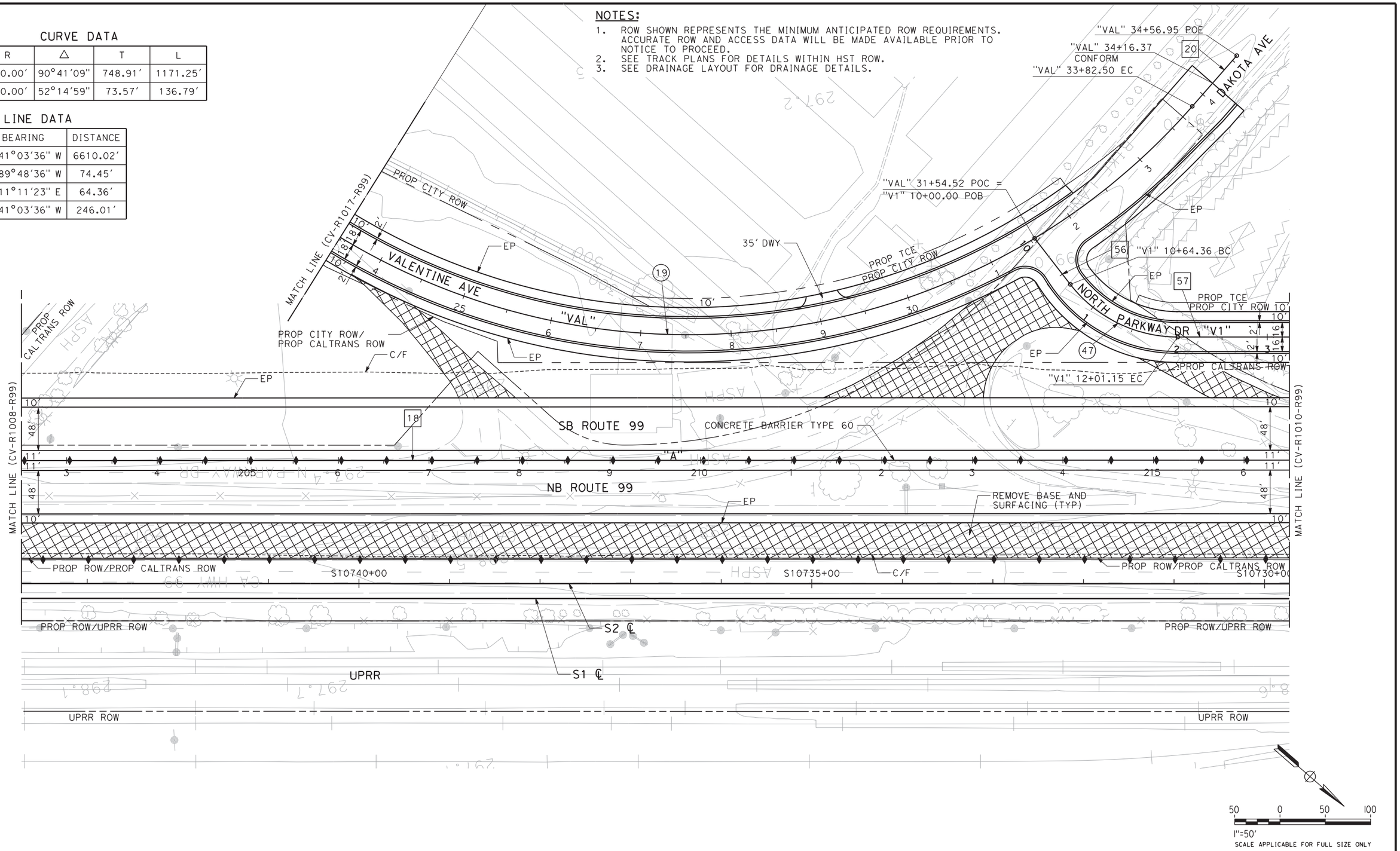

REV	DATE	BY	CHK	APP	DESCRIPTION

DESIGNED BY G. MANOREK
DRAWN BY R. MITRY
CHECKED BY L. HEUSTON
IN CHARGE F. NOBARI
DATE 11/22/11

PROPOSED PRELIMINARY DESIGN

NOT FOR CONSTRUCTION

AECOM Technical Services, Inc.
2020 L Street, Suite 300
Sacramento, CA 95811
CH2MHILL

CALIFORNIA HIGH-SPEED RAIL AUTHORITY

CALIFORNIA HIGH-SPEED TRAIN PROJECT
SIERRA SUBDIVISION
PACKAGE 1A
ROADWAY
LAYOUTS
SR 99 - HIGHWAY, LOCAL ROADS

CONTRACT NO.
DRAWING NO. CV-R1009-R99
SCALE AS SHOWN
SHEET NO.

ychiu 11/16/2011 2:18:46 PM CAHSRP-R1.TBL CHSR_half_black.plt C:\Documents and Settings\ychiu\My Documents\NDMProj\356751 - California High Speed Rail - SR99 Improvements\15-CV-R1009-R99.dgn

CURVE DATA

NO.	R	Δ	T	L
20	3000.00′	25°07′25"	668.48′	1315.46′
21	3000.00′	05°30′14"	144.20′	288.18′
22	1100.00′	21°36′12"	209.87′	414.75′
23	2500.00′	04°23′45"	95.95′	191.80′

LINE DATA

NO.	BEARING	DISTANCE
18	N 41°03′36" W	6610.02′
21	N 42°12′21" W	300.06′
22	N 69°18′46" W	282.03′
23	N 36°11′28" W	321.65′
24	N 40°35′13" W	1061.42′
57	N 41°03′36" W	246.01′

NOTES:

1. ROW SHOWN REPRESENTS THE MINIMUM ANTICIPATED ROW REQUIREMENTS. ACCURATE ROW AND ACCESS DATA WILL BE MADE AVAILABLE PRIOR TO NOTICE TO PROCEED.
2. REFER TO CITY OF FRESNO PUBLIC WORKS STANDARD DRAWINGS FOR CUL-DE-SAC DETAILS
3. SEE TRACK PLANS FOR DETAILS WITHIN HST ROW.
4. SEE DRAINAGE LAYOUT FOR DRAINAGE DETAILS.

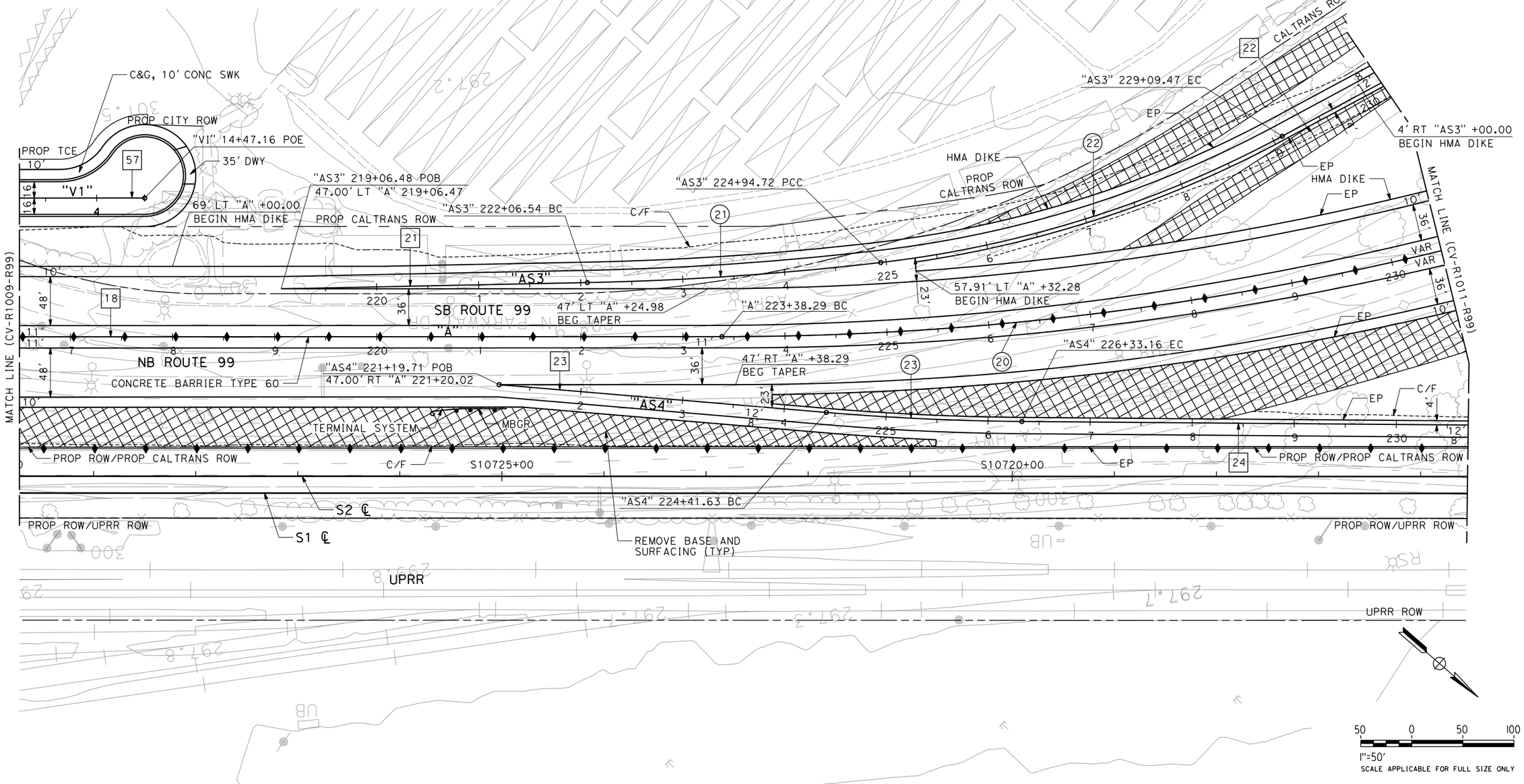

REV	DATE	BY	CHK	APP	DESCRIPTION

DESIGNED BY G. MANOREK
DRAWN BY R. MITRY
CHECKED BY L. HEUSTON
IN CHARGE F. NOBARI
DATE 2/17/12

PROPOSED PRELIMINARY DESIGN

NOT FOR CONSTRUCTION

AECOM Technical Services, Inc.
2020 L Street, Suite 300
Sacramento, CA 95811
CH2MHILL

CALIFORNIA HIGH-SPEED RAIL AUTHORITY

CALIFORNIA HIGH-SPEED TRAIN PROJECT
SIERRA SUBDIVISION
PACKAGE 1A
ROADWAY
LAYOUTS
SR 99 - HIGHWAY, RAMPS, LOCAL ROADS

CONTRACT NO.
DRAWING NO. CV-R1010-R99
SCALE AS SHOWN
SHEET NO.

ychiu 2/16/2012 5:37:45 PM CAHSRP-R1.TBL CHSR_half_black.plt C:\Documents and Settings\ychiu\My Documents\NDMProj\356751 - California High Speed Rail - SR99 Improvements\15-CV-R1010-R99_OPTION

sleong 2/13/2012 2:43:20 PM CAHSRP-R1.TBL CHSR_half_black-pdf995.pc3 C:\Documents and Settings\sleong\My Documents\NDMProj\356751 - California High Speed Rail - SR99 Improvements\1S-CV-R1011-R99_OPTIO

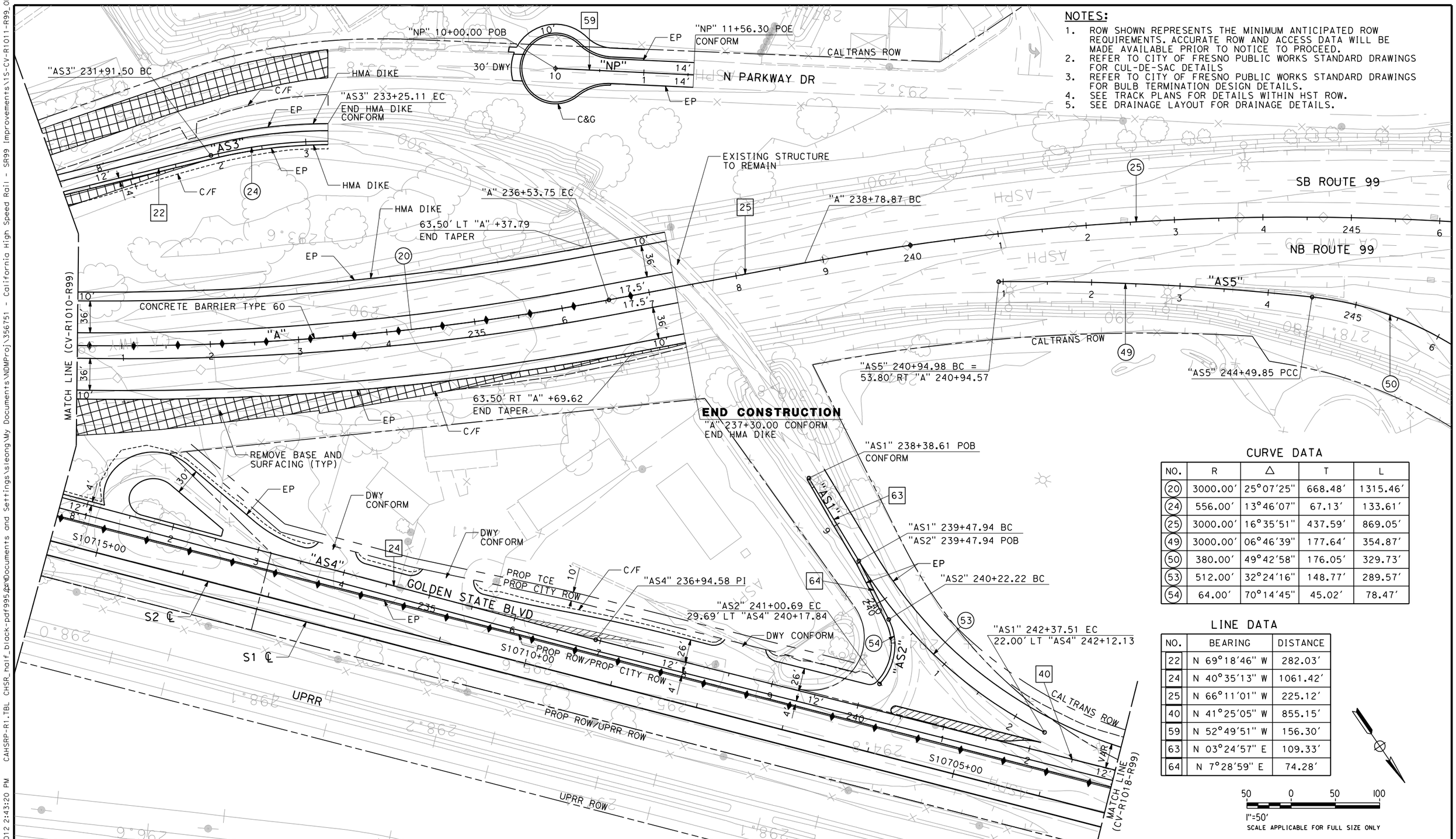

NOTES:

1. ROW SHOWN REPRESENTS THE MINIMUM ANTICIPATED ROW REQUIREMENTS. ACCURATE ROW AND ACCESS DATA WILL BE MADE AVAILABLE PRIOR TO NOTICE TO PROCEED.
2. REFER TO CITY OF FRESNO PUBLIC WORKS STANDARD DRAWINGS FOR CUL-DE-SAC DETAILS
3. REFER TO CITY OF FRESNO PUBLIC WORKS STANDARD DRAWINGS FOR BULB TERMINATION DESIGN DETAILS.
4. SEE TRACK PLANS FOR DETAILS WITHIN HST ROW.
5. SEE DRAINAGE LAYOUT FOR DRAINAGE DETAILS.

CURVE DATA

NO.	R	Δ	T	L
20	3000.00'	25°07'25"	668.48'	1315.46'
24	556.00'	13°46'07"	67.13'	133.61'
25	3000.00'	16°35'51"	437.59'	869.05'
49	3000.00'	06°46'39"	177.64'	354.87'
50	380.00'	49°42'58"	176.05'	329.73'
53	512.00'	32°24'16"	148.77'	289.57'
54	64.00'	70°14'45"	45.02'	78.47'

LINE DATA

NO.	BEARING	DISTANCE
22	N 69°18'46" W	282.03'
24	N 40°35'13" W	1061.42'
25	N 66°11'01" W	225.12'
40	N 41°25'05" W	855.15'
59	N 52°49'51" W	156.30'
63	N 03°24'57" E	109.33'
64	N 7°28'59" E	74.28'

50 0 50 100
1"=50'
SCALE APPLICABLE FOR FULL SIZE ONLY

REV	DATE	BY	CHK	APP	DESCRIPTION

DESIGNED BY G. MANOREK
DRAWN BY R. MITRY
CHECKED BY L. HEUSTON
IN CHARGE F. NOBARI
DATE 2/17/12

PROPOSED PRELIMINARY DESIGN

NOT FOR CONSTRUCTION

AECOM Technical Services, Inc.
2020 L Street, Suite 300
Sacramento, CA 95811
CH2MHILL

CALIFORNIA HIGH-SPEED RAIL AUTHORITY

CALIFORNIA HIGH-SPEED TRAIN PROJECT
SIERRA SUBDIVISION
PACKAGE 1A
ROADWAY
LAYOUTS
SR 99 - HIGHWAY, RAMPS, LOCAL ROADS

CONTRACT NO.
DRAWING NO. CV-R1011-R99
SCALE AS SHOWN
SHEET NO.

NOTES:

1. ROW SHOWN REPRESENTS THE MINIMUM ANTICIPATED ROW REQUIREMENTS. ACCURATE ROW AND ACCESS DATA WILL BE MADE AVAILABLE PRIOR TO NOTICE TO PROCEED.
2. SEE DRAWING CV-R1001-R99 THRU CV-R1011-R99 FOR ROUTE 99
3. REFER TO CITY OF FRESNO PUBLIC WORKS STANDARD DRAWINGS FOR CUL-DE-SAC DETAILS
4. SEE DRAINAGE LAYOUT FOR DRAINAGE DETAILS.

CURVE DATA

NO.	R	Δ	T	L
26	2030.00′	05°39′31"	100.32′	200.48′
27	2000.00′	05°46′29"	100.87′	201.57′
51	75.00′	90°12′27"	75.27′	118.08′
52	30.00′	61°20′33"	17.79′	32.12′

LINE DATA

NO.	BEARING	DISTANCE
26	S 89°45′35" E	309.80′
27	S 89°52′33" E	1147.23′
60	S 00°00′36" W	73.40′
61	N 89°48′09" E	393.83′

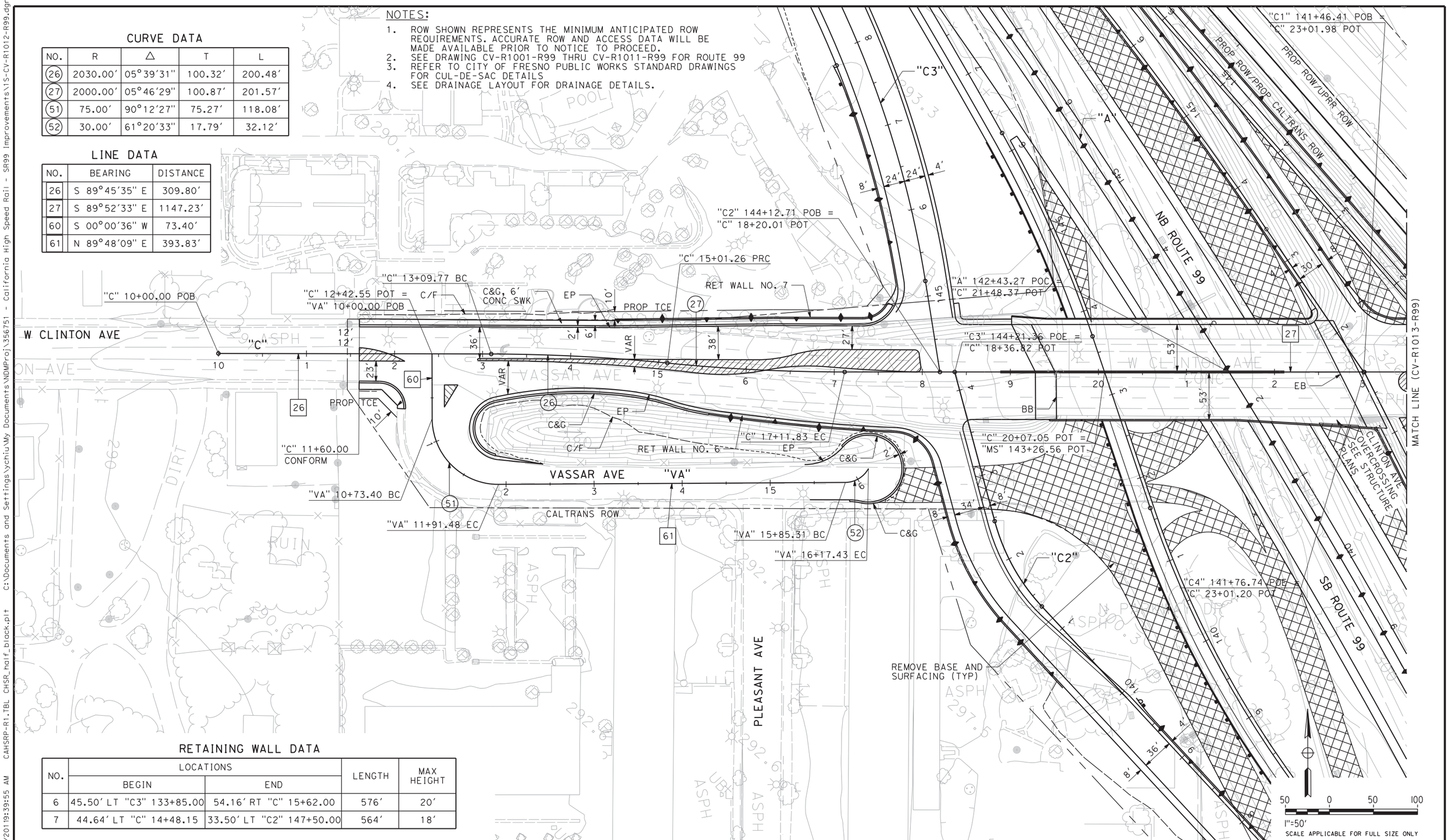

RETAINING WALL DATA

NO.	LOCATIONS		LENGTH	MAX HEIGHT
	BEGIN	END		
6	45.50′ LT "C3" 133+85.00	54.16′ RT "C" 15+62.00	576′	20′
7	44.64′ LT "C" 14+48.15	33.50′ LT "C2" 147+50.00	564′	18′

REV	DATE	BY	CHK	APP	DESCRIPTION

DESIGNED BY G. MANOREK
DRAWN BY R. MITRY
CHECKED BY L. HEUSTON
IN CHARGE F. NOBARI
DATE 11/22/11

PROPOSED PRELIMINARY DESIGN

NOT FOR CONSTRUCTION

AECOM Technical Services, Inc.
2020 L Street, Suite 300
Sacramento, CA 95811
CH2MHILL

CALIFORNIA HIGH-SPEED RAIL AUTHORITY

CALIFORNIA HIGH-SPEED TRAIN PROJECT
SIERRA SUBDIVISION
PACKAGE 1A
ROADWAY
LAYOUTS
SR 99 - W CLINTON AVE

CONTRACT NO.
DRAWING NO. CV-R1012-R99
SCALE AS SHOWN
SHEET NO.

ychiu 11/17/2011 9:39:55 AM CAHSRP-R1.TBL CHSR_half_black.plt C:\Documents and Settings\ychiu\My Documents\NDMProj\356751 - California High Speed Rail - SR99 Improvements\15-CV-R1012-R99.dgn

CURVE DATA

NO.	R	Δ	T	L
28	8000.00′	01°44′10″	121.21′	242.40′

LINE DATA

NO.	BEARING	DISTANCE
27	S 89°52′33″ E	1147.23′
28	N 88°23′17″ E	393.33′
29	S 89°35′22″ E	215.09′
50	N 38°48′41″ W	326.64′

NOTES:

1. ROW SHOWN REPRESENTS THE MINIMUM ANTICIPATED ROW REQUIREMENTS. ACCURATE ROW AND ACCESS DATA WILL BE MADE AVAILABLE PRIOR TO NOTICE TO PROCEED.
2. SEE DRAWING CV-R1001-R99 THRU CV-R1011-R99 FOR ROUTE 99
3. SEE DRAINAGE LAYOUT FOR DRAINAGE DETAILS.

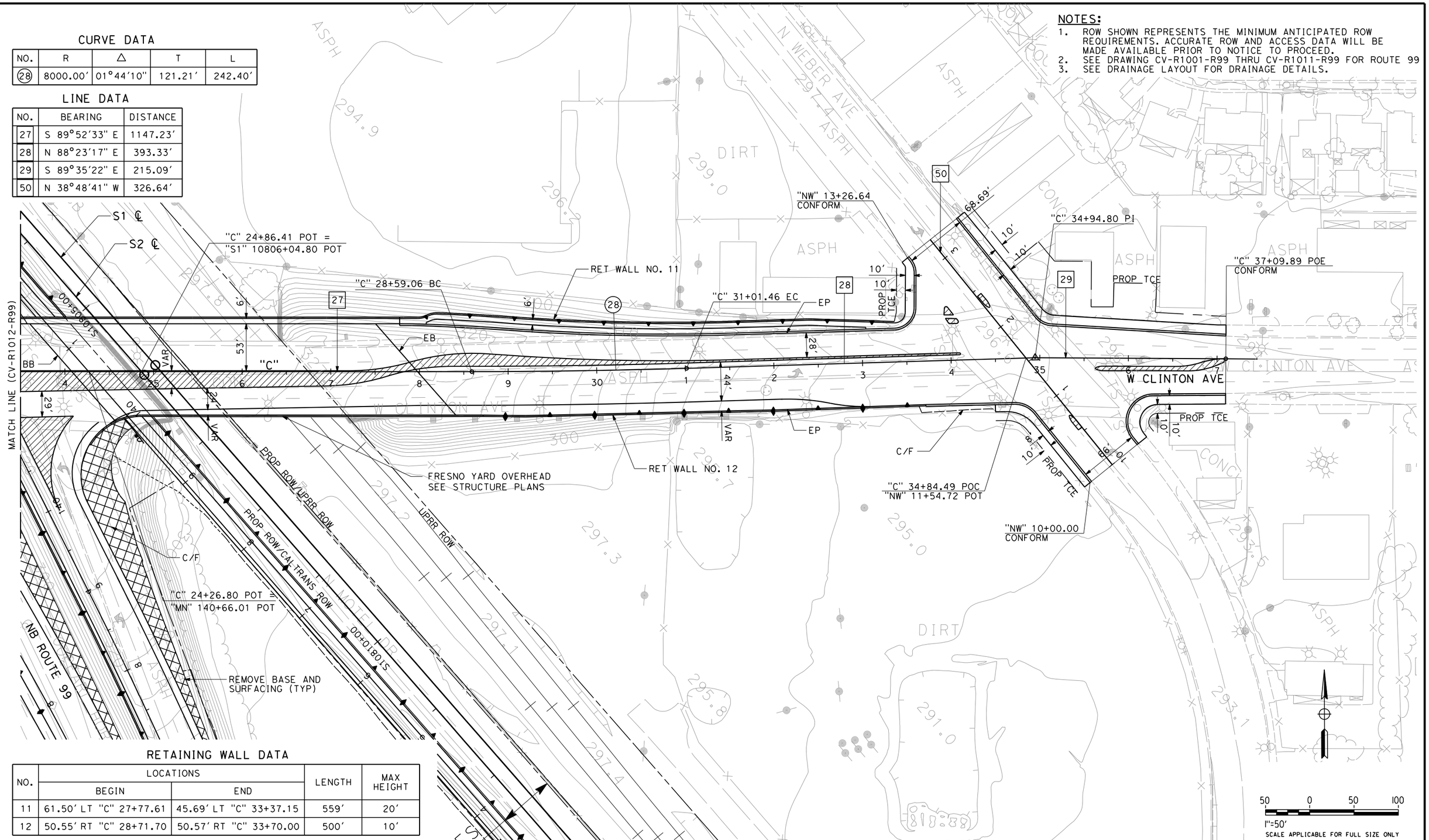

RETAINING WALL DATA

NO.	LOCATIONS		LENGTH	MAX HEIGHT
	BEGIN	END		
11	61.50′ LT "C" 27+77.61	45.69′ LT "C" 33+37.15	559′	20′
12	50.55′ RT "C" 28+71.70	50.57′ RT "C" 33+70.00	500′	10′

REV	DATE	BY	CHK	APP	DESCRIPTION

DESIGNED BY G. MANOREK
DRAWN BY R. MITRY
CHECKED BY L. HEUSTON
IN CHARGE F. NOBARI
DATE 2/17/12

PROPOSED PRELIMINARY DESIGN

NOT FOR CONSTRUCTION

AECOM Technical Services, Inc.
2020 L Street, Suite 300
Sacramento, CA 95811
CH2MHILL

CALIFORNIA HIGH-SPEED RAIL AUTHORITY

CALIFORNIA HIGH-SPEED TRAIN PROJECT
SIERRA SUBDIVISION
PACKAGE 1A
ROADWAY
LAYOUTS
SR 99 - W CLINTON AVE

CONTRACT NO.
DRAWING NO. CV-R1013-R99
SCALE AS SHOWN
SHEET NO.

sleong 2/13/2012 2:44:17 PM CAHSRP-R1.TBL CHSR_half_black-pdf995.pt Documents and Settings\sleong\My Documents\NDMProj\356751 - California High Speed Rail - SR99 Improvements\1S-CV-R1013-R99_OPTIO

11/16/2011 2:06:10 PM CAHSRP-R1.TBL CHSR_half_black.plt C:\Documents and Settings\ychiu\My Documents\NDMProj\356751 - California High Speed Rail - SR99 Improvements\15-CV-R1014-R99.dgn
ychiu

LINE DATA

No.	BEARING	DISTANCE
30	N 41°03'36" W	653.87'

NOTES:

1. ROW SHOWN REPRESENTS THE MINIMUM ANTICIPATED ROW REQUIREMENTS. ACCURATE ROW AND ACCESS DATA WILL BE MADE AVAILABLE PRIOR TO NOTICE TO PROCEED.
2. SEE TRACK PLANS FOR DETAILS WITHIN HST ROW.

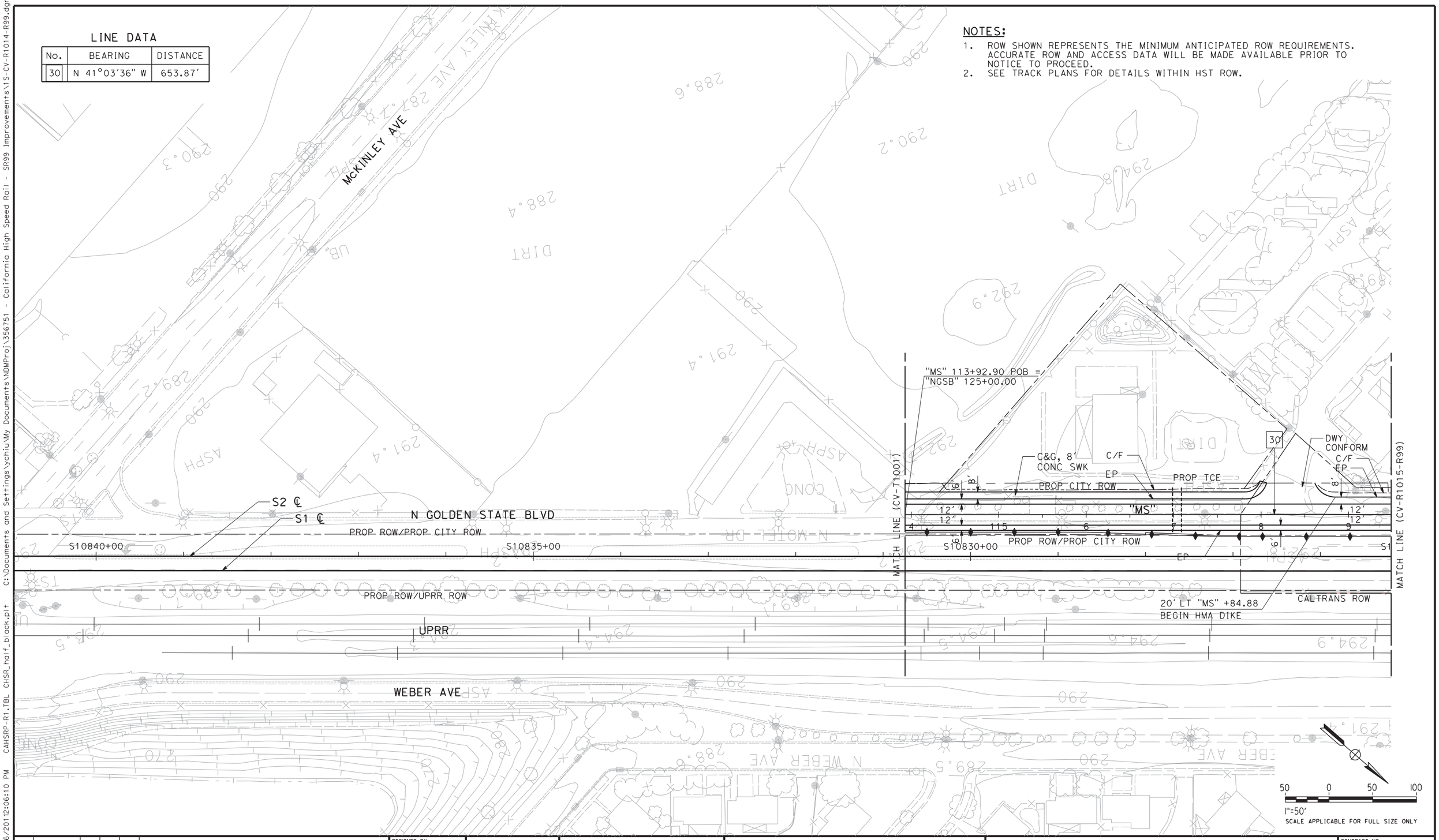

REV	DATE	BY	CHK	APP	DESCRIPTION

DESIGNED BY G. MANOREK
DRAWN BY R. MITRY
CHECKED BY L. HEUSTON
IN CHARGE F. NOBARI
DATE 11/22/11

PROPOSED PRELIMINARY DESIGN

NOT FOR CONSTRUCTION

AECOM Technical Services, Inc.
2020 L Street, Suite 300
Sacramento, CA 95811

CH2MHILL

CALIFORNIA HIGH-SPEED RAIL AUTHORITY

CALIFORNIA HIGH-SPEED TRAIN PROJECT
SIERRA SUBDIVISION
PACKAGE 1A
ROADWAY
LAYOUTS
SR 99 - N GOLDEN STATE BLVD

CONTRACT NO.
DRAWING NO. CV-R1014-R99
SCALE AS SHOWN
SHEET NO.

CURVE DATA

No.	R	Δ	T	L
29	800.00′	29°29′28″	210.56′	411.78′
30	800.00′	26°27′15″	188.04′	369.37′

LINE DATA

No.	BEARING	DISTANCE
7	N 70°33′04″ W	638.18′
8	N 67°30′51″ W	361.95′
16	N 41°02′30″ W	1276.94′
30	N 41°03′36″ W	653.87′
31	N 41°03′36″ W	84.98′
32	N 40°35′08″ W	475.05′
33	N 41°02′30″ W	459.00′

NOTES:

1. ROW SHOWN REPRESENTS THE MINIMUM ANTICIPATED ROW REQUIREMENTS. ACCURATE ROW AND ACCESS DATA WILL BE MADE AVAILABLE PRIOR TO NOTICE TO PROCEED.
2. SEE TRACK PLANS FOR DETAILS WITHIN HST ROW.
3. SEE DRAINAGE LAYOUT FOR DRAINAGE DETAILS.

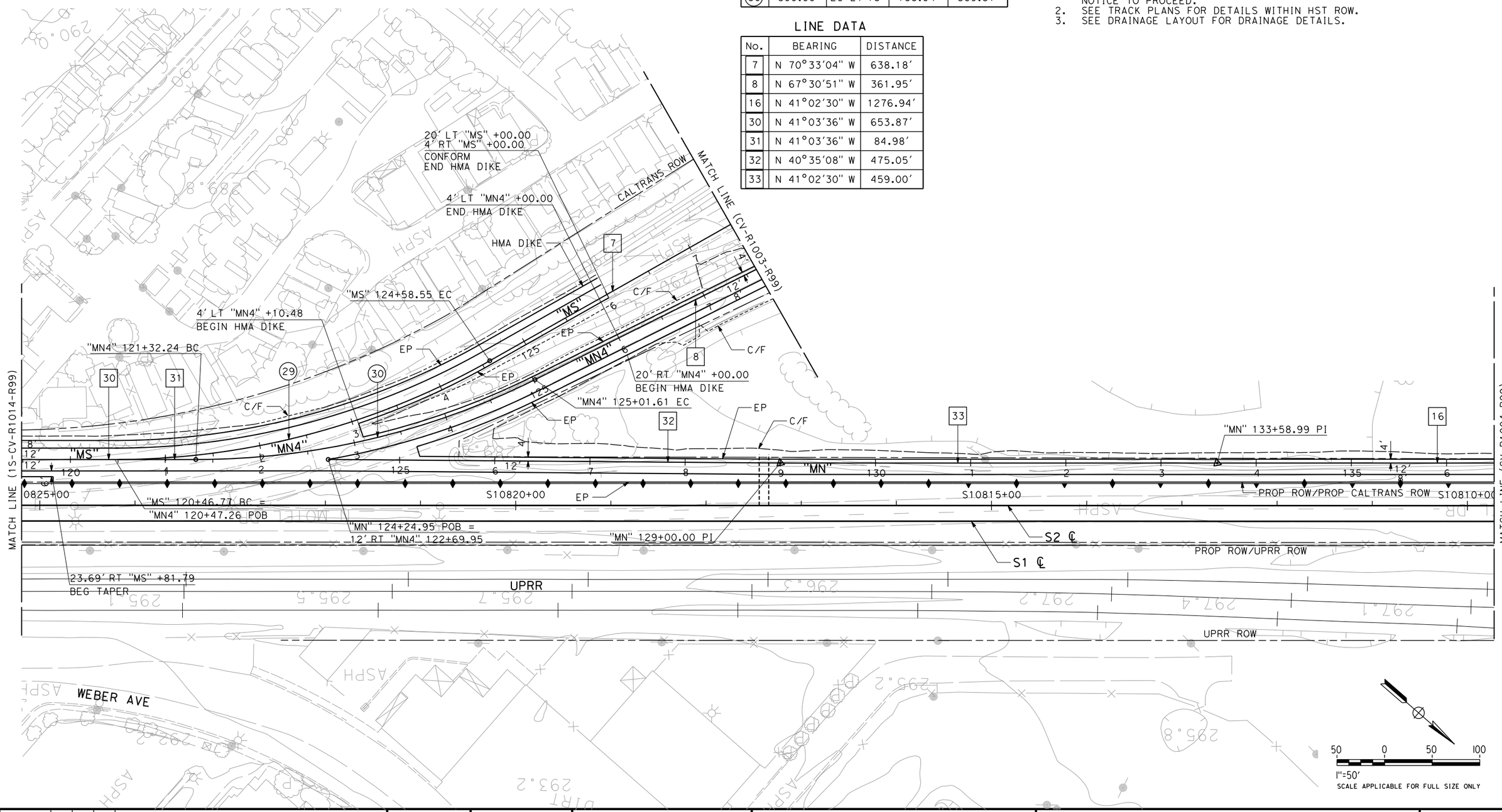

REV	DATE	BY	CHK	APP	DESCRIPTION

DESIGNED BY G. MANOREK
DRAWN BY R. MITRY
CHECKED BY L. HEUSTON
IN CHARGE F. NOBARI
DATE 11/22/11

PROPOSED PRELIMINARY DESIGN

NOT FOR CONSTRUCTION

AECOM Technical Services, Inc.
2020 L Street, Suite 300
Sacramento, CA 95811

CH2MHILL

CALIFORNIA HIGH-SPEED RAIL AUTHORITY

CALIFORNIA HIGH-SPEED TRAIN PROJECT
SIERRA SUBDIVISION
PACKAGE 1A
ROADWAY
LAYOUTS
SR 99 - RAMPS

CONTRACT NO.
DRAWING NO. CV-R1015-R99
SCALE AS SHOWN
SHEET NO.

ychiu 11/16/2011 2:21:12 PM CAHSRP-R1.TBL CHSR_half_black.plt C:\Documents and Settings\ychiu\My Documents\NDMProj\356751 - California High Speed Rail - SR99 Improvements\1S-CV-R1015-R99.dgn

CURVE DATA

No.	R	Δ	T	L
31	550.00′	27°24′49"	134.14′	263.15′
32	60.00′	90°00′58"	60.02′	94.26′
33	300.00′	27°14′06"	72.67′	142.60′

LINE DATA

No.	BEARING	DISTANCE
34	N 00°32′56" E	213.18′
35	N 26°51′53" W	498.27′
36	S 00°23′11" W	105.58′
37	S 89°37′47" E	629.50′
38	N 63°08′07" E	111.55′

NOTES:

1. ROW SHOWN REPRESENTS THE MINIMUM ANTICIPATED ROW REQUIREMENTS. ACCURATE ROW AND ACCESS DATA WILL BE MADE AVAILABLE PRIOR TO NOTICE TO PROCEED.
2. SEE DRAWING CV-R1001-R99 THRU CV-R1011-R99 FOR ROUTE 99
3. REFER TO CITY OF FRESNO PUBLIC WORKS STANDARD DRAWINGS FOR CUL-DE-SAC DETAILS.
4. SEE DRAINAGE LAYOUT FOR DRAINAGE DETAILS.

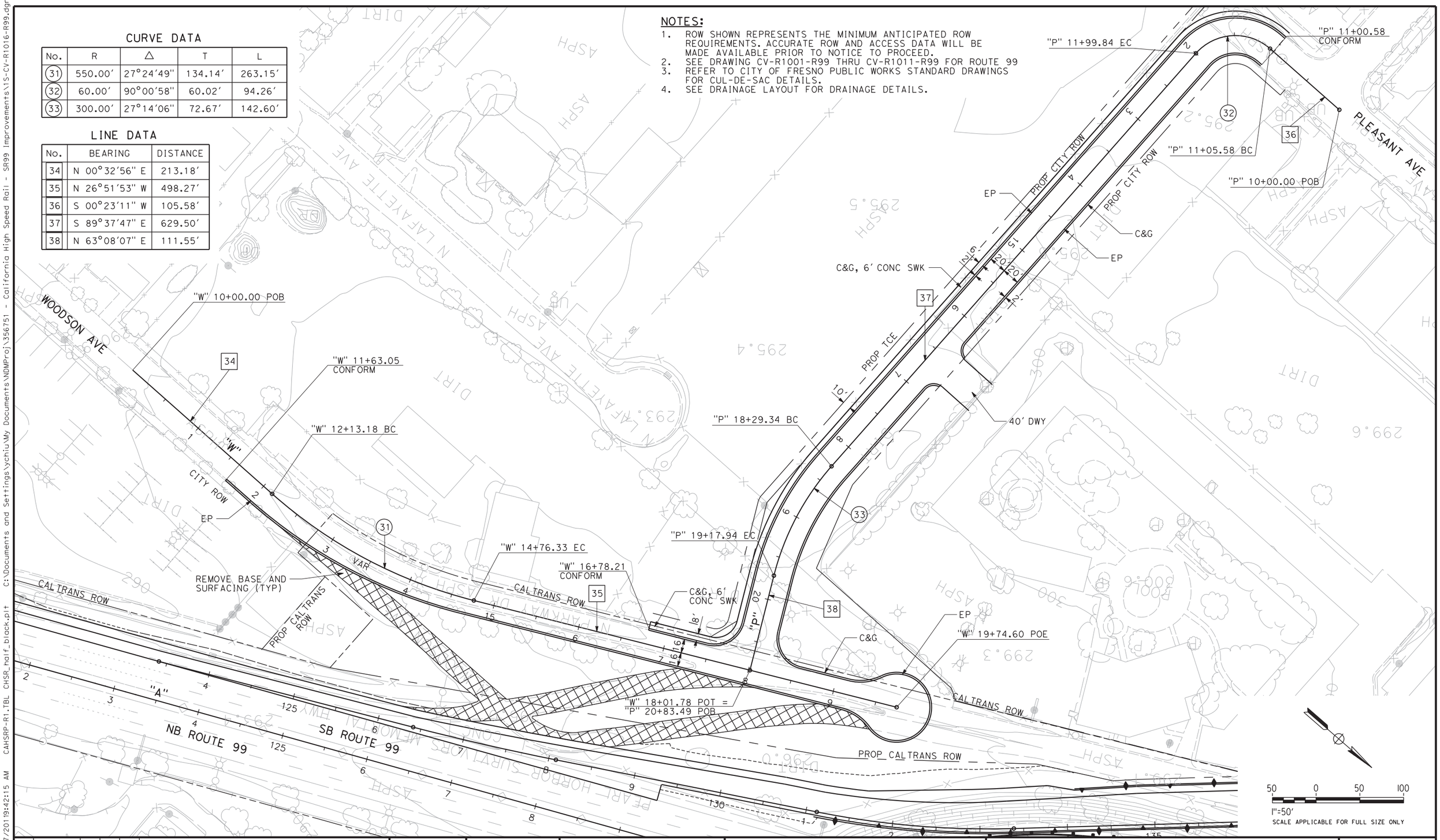

REV	DATE	BY	CHK	APP	DESCRIPTION

DESIGNED BY G. MANOREK
DRAWN BY R. MITRY
CHECKED BY L. HEUSTON
IN CHARGE F. NOBARI
DATE 11/22/11

PROPOSED PRELIMINARY DESIGN

NOT FOR CONSTRUCTION

AECOM Technical Services, Inc.
2020 L Street, Suite 300
Sacramento, CA 95811
CH2MHILL

CALIFORNIA HIGH-SPEED RAIL AUTHORITY

CALIFORNIA HIGH-SPEED TRAIN PROJECT
SIERRA SUBDIVISION
PACKAGE 1A
ROADWAY
LAYOUTS
SR 99 - LOCAL ROADS

CONTRACT NO.
DRAWING NO. CV-R1016-R99
SCALE AS SHOWN
SHEET NO.

11/17/2011 9:42:15 AM CAHSRP-R1.TBL CHSR_half_black.plt C:\Documents and Settings\ychiu\My Documents\NDMProj\356751 - California High Speed Rail - SR99 Improvements\15-CV-R1016-R99.dgn
ychiu

CURVE DATA

No.	R	Δ	T	L
19	740.00′	90°41′09"	748.91′	1171.25′

LINE DATA

No.	BEARING	DISTANCE
39	N 00°52′33" E	311.25′

NOTE:

1. ROW SHOWN REPRESENTS THE MINIMUM ANTICIPATED ROW REQUIREMENTS. ACCURATE ROW AND ACCESS DATA WILL BE MADE AVAILABLE PRIOR TO NOTICE TO PROCEED.
2. DRAWINGS CV-R1001-R99 THRU CV-R1011-R99 FOR ROUTE 99
3. SEE DRAINAGE LAYOUT FOR DRAINAGE DETAILS.

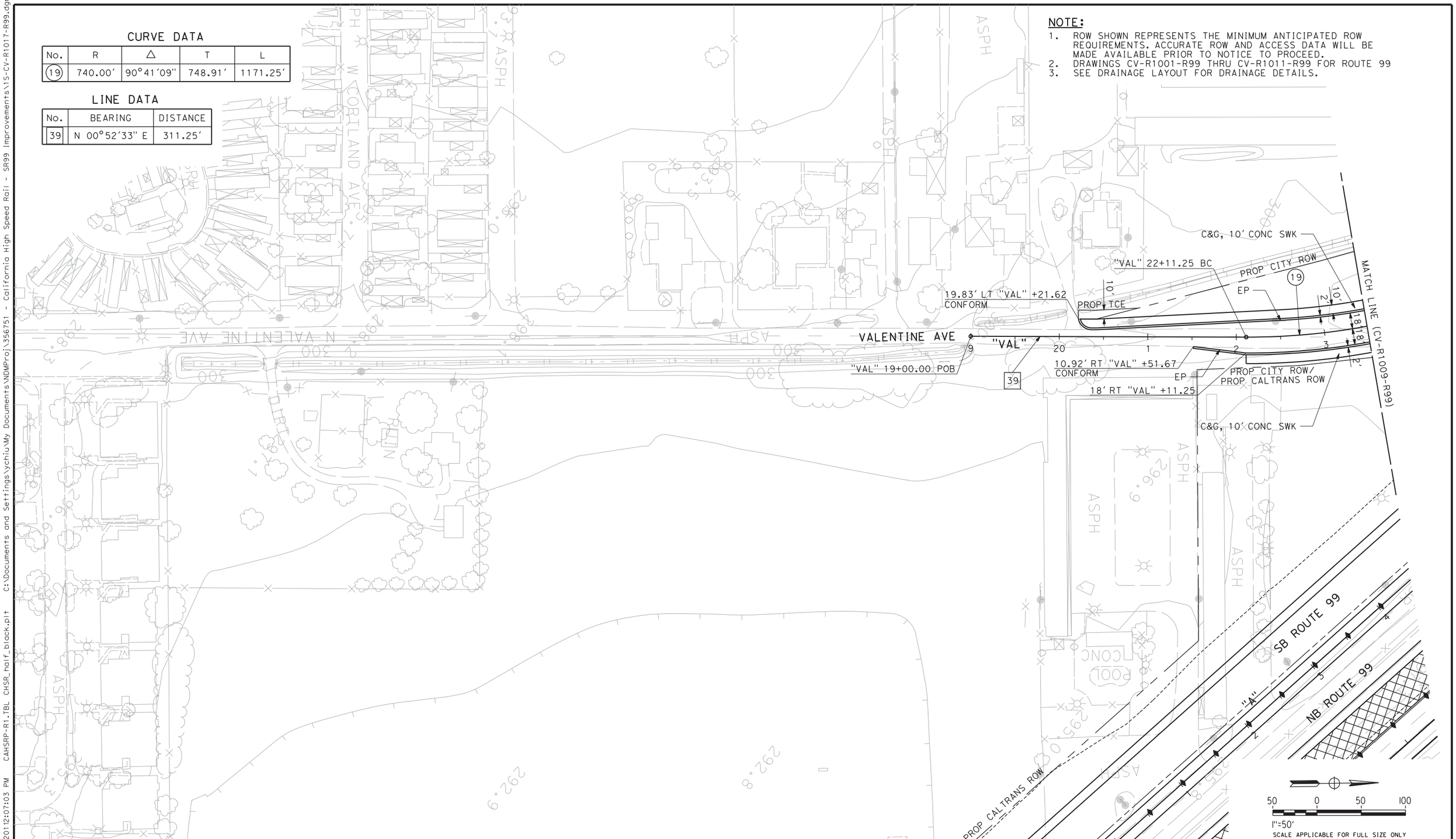

REV	DATE	BY	CHK	APP	DESCRIPTION

DESIGNED BY G. MANOREK
DRAWN BY R. MITRY
CHECKED BY L. HEUSTON
IN CHARGE F. NOBARI
DATE 11/22/11

PROPOSED PRELIMINARY DESIGN

NOT FOR CONSTRUCTION

AECOM Technical Services, Inc.
2020 L Street, Suite 300
Sacramento, CA 95811
CH2MHILL

CALIFORNIA HIGH-SPEED RAIL AUTHORITY

CALIFORNIA HIGH-SPEED TRAIN PROJECT
SIERRA SUBDIVISION
PACKAGE 1A
ROADWAY
LAYOUTS
SR 99 - LOCAL ROADS

CONTRACT NO.
DRAWING NO. CV-R1017-R99
SCALE AS SHOWN
SHEET NO.

11/16/2011 2:07:03 PM CAHSRP-R1.TBL CHSR_half_black.plt C:\Documents and Settings\ychiu\My Documents\NDMProj\356751 - California High Speed Rail - SR99 Improvements\15-CV-R1017-R99.dgn
ychiu

CURVE DATA

No.	R	Δ	T	L
35	4350.00′	04°30′04"	170.95′	341.73′
50	380.00′	49°42′58"	176.05′	329.73′

LINE DATA

No.	BEARING	DISTANCE
40	N 41°25′05" W	855.15′
41	N 41°02′30" W	250.27′
43	N 89°31′40" E	335.69′
44	S 85°58′16" E	1401.78′
62	N 00°23′45" E	286.68′

NOTES:

1. ROW SHOWN REPRESENTS THE MINIMUM ANTICIPATED ROW REQUIREMENTS. ACCURATE ROW AND ACCESS DATA WILL BE MADE AVAILABLE PRIOR TO NOTICE TO PROCEED.
2. SEE TRACK PLANS FOR DETAILS WITHIN HST ROW.
3. SEE DRAINAGE LAYOUT FOR DRAINAGE DETAILS.

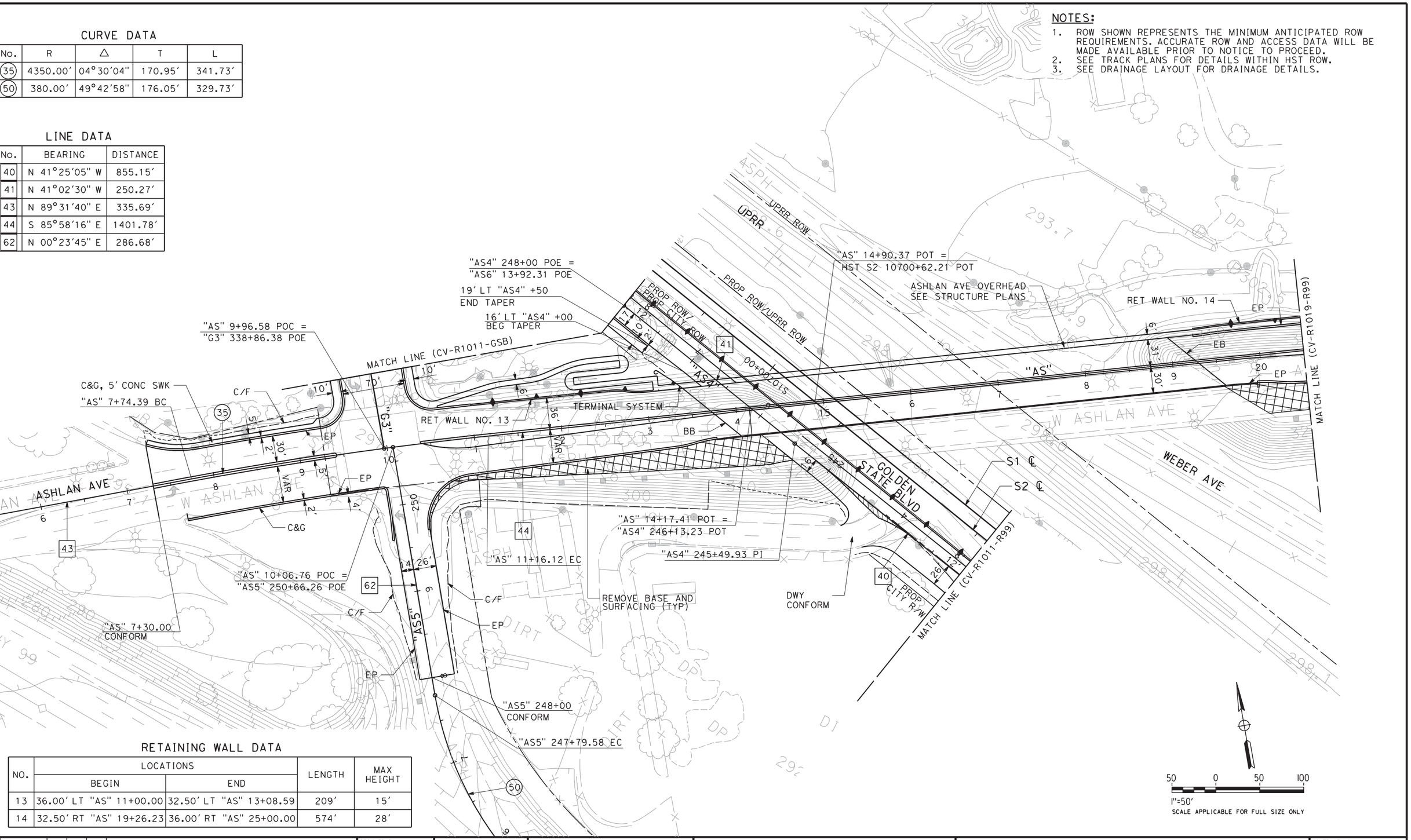

RETAINING WALL DATA

NO.	LOCATIONS		LENGTH	MAX HEIGHT
	BEGIN	END		
13	36.00′ LT "AS" 11+00.00	32.50′ LT "AS" 13+08.59	209′	15′
14	32.50′ RT "AS" 19+26.23	36.00′ RT "AS" 25+00.00	574′	28′

REV	DATE	BY	CHK	APP	DESCRIPTION

DESIGNED BY G. MANOREK
DRAWN BY R. MITRY
CHECKED BY L. HEUSTON
IN CHARGE F. NOBARI
DATE 2/17/12

PROPOSED PRELIMINARY DESIGN

NOT FOR CONSTRUCTION

AECOM Technical Services, Inc.
2020 L Street, Suite 300
Sacramento, CA 95811
CH2MHILL

CALIFORNIA HIGH-SPEED RAIL AUTHORITY

CALIFORNIA HIGH-SPEED TRAIN PROJECT
SIERRA SUBDIVISION
PACKAGE 1A
ROADWAY
LAYOUTS
SR 99 - ASHLAN AVE

CONTRACT NO.
DRAWING NO. CV-R1018-R99
SCALE AS SHOWN
SHEET NO.

2/16/2012 12:37:36 PM CAHSRP-R1.TBL CHSR_half_black-pdf995.pc3 C:\Documents and Settings\sleong\My Documents\NDMProj\356751 - California High Speed Rail - SR99 Improvements\1S-CV-R1018-R99_OPTIO
sleong

CURVE DATA

No.	R	Δ	T	L
36	1800.00′	17°19′44"	274.30′	544.40′
37	1950.00′	06°48′22"	115.96′	231.64′

LINE DATA

No.	BEARING	DISTANCE
44	S 85°58′16" E	1401.78′

NOTES:

1. ROW SHOWN REPRESENTS THE MINIMUM ANTICIPATED ROW REQUIREMENTS. ACCURATE ROW AND ACCESS DATA WILL BE MADE AVAILABLE PRIOR TO NOTICE TO PROCEED.
2. SEE DRAINAGE LAYOUT FOR DRAINAGE DETAILS.

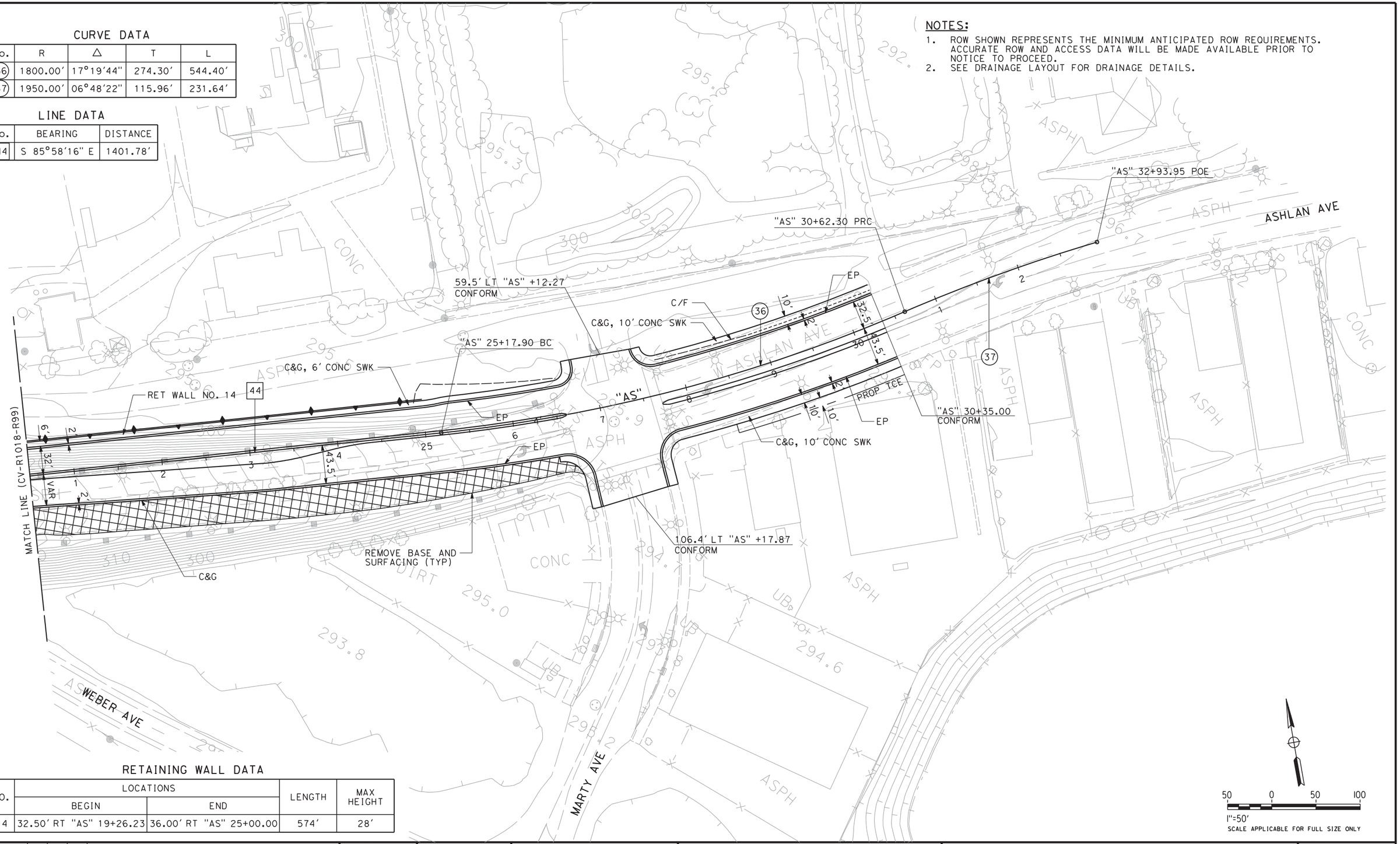

RETAINING WALL DATA

NO.	LOCATIONS		LENGTH	MAX HEIGHT
	BEGIN	END		
14	32.50′ RT "AS" 19+26.23	36.00′ RT "AS" 25+00.00	574′	28′

REV	DATE	BY	CHK	APP	DESCRIPTION

DESIGNED BY G. MANOREK
DRAWN BY R. MITRY
CHECKED BY L. HEUSTON
IN CHARGE F. NOBARI
DATE 2/17/12

PROPOSED PRELIMINARY DESIGN

NOT FOR CONSTRUCTION

AECOM Technical Services, Inc.
2020 L Street, Suite 300
Sacramento, CA 95811
CH2MHILL

CALIFORNIA HIGH-SPEED RAIL AUTHORITY

CALIFORNIA HIGH-SPEED TRAIN PROJECT
SIERRA SUBDIVISION
PACKAGE 1A
ROADWAY
LAYOUTS
SR 99 - ASHLAN AVE

CONTRACT NO.
DRAWING NO. CV-R1019-R99
SCALE AS SHOWN
SHEET NO.

sleong 2/13/2012 2:48:03 PM CAHSRP-R1.TBL CHSR_half_black-pdf995.pt N:\Documents and Settings\sleong\My Documents\NDMProj\356751 - California High Speed Rail - SR99 Improvements\1S-CV-R1019-R99_OPTIO

CURVE DATA

No.	R	Δ	T	L
38	700.00′	31°46′07"	199.19′	388.13′
39	3500.00′	07°35′22"	232.15′	463.62′
40	3500.00′	07°01′17"	214.73′	428.92′

LINE DATA

No.	BEARING	DISTANCE
45	N 47°26′56" W	213.68′
46	N 55°02′18" W	513.46′
47	N 47°26′56" W	30.45′
48	N 79°13′03" W	183.03′

NOTES:

1. ROW SHOWN REPRESENTS THE MINIMUM ANTICIPATED ROW REQUIREMENTS. ACCURATE ROW AND ACCESS DATA WILL BE MADE AVAILABLE PRIOR TO NOTICE TO PROCEED.
2. SEE DRAINAGE LAYOUT FOR DRAINAGE DETAILS.

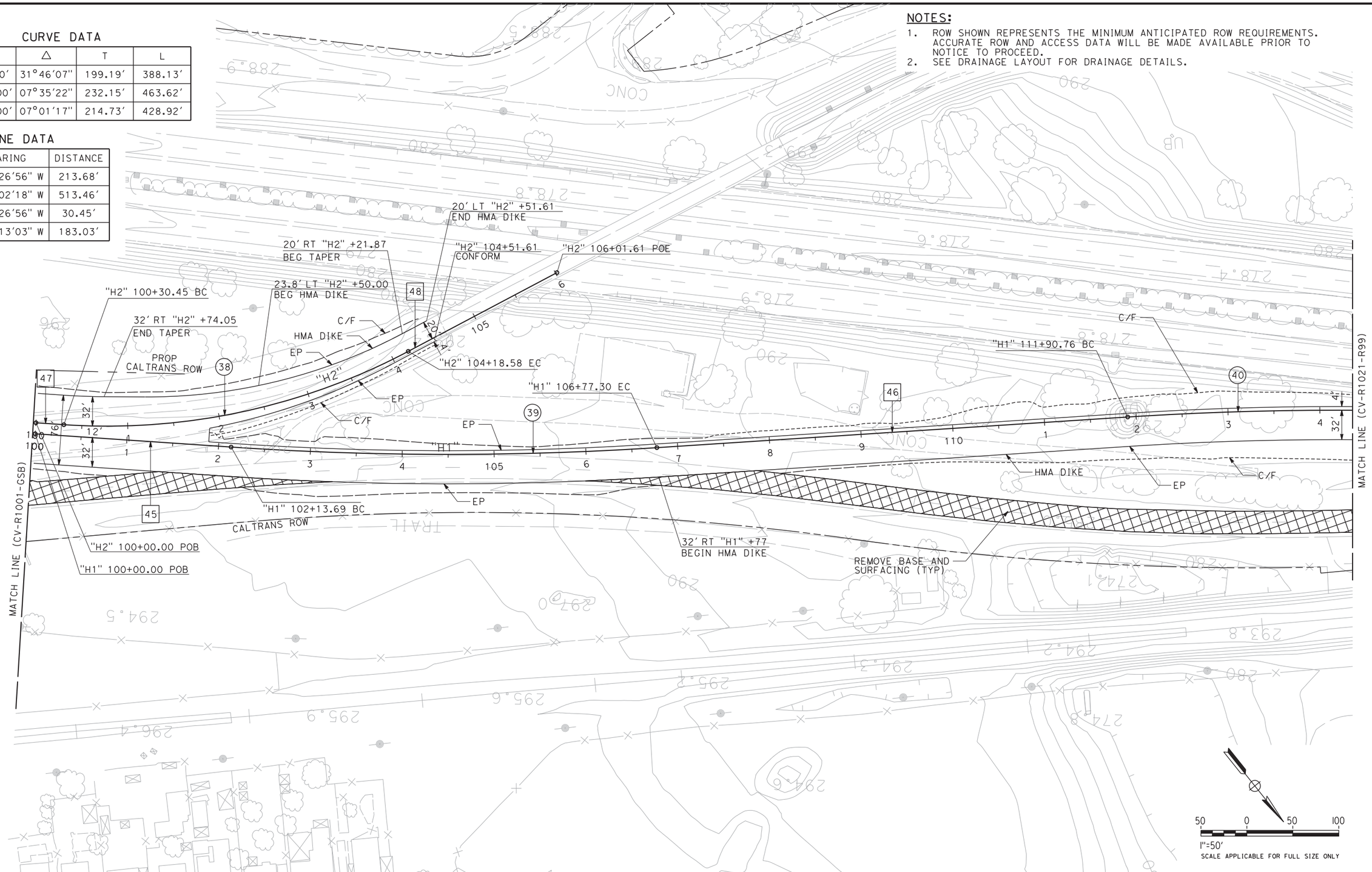

REV	DATE	BY	CHK	APP	DESCRIPTION

DESIGNED BY G. MANOREK
DRAWN BY R. MITRY
CHECKED BY L. HEUSTON
IN CHARGE F. NOBARI
DATE 11/22/11

PROPOSED PRELIMINARY DESIGN

NOT FOR CONSTRUCTION

AECOM Technical Services, Inc.
2020 L Street, Suite 300
Sacramento, CA 95811

CH2MHILL

CALIFORNIA HIGH-SPEED RAIL AUTHORITY

CALIFORNIA HIGH-SPEED TRAIN PROJECT
SIERRA SUBDIVISION
PACKAGE 1A
ROADWAY
LAYOUTS
SR 99 - RAMPS

CONTRACT NO.
DRAWING NO. CV-R1020-R99
SCALE AS SHOWN
SHEET NO.

ychiu 11/17/2011 9:44:23 AM CAHSRP-R1.TBL CHSR_half_black.plt C:\Documents and Settings\ychiu\My Documents\NDMProj\356751 - California High Speed Rail - SR99 Improvements\15-CV-R1020-R99.dgn

CURVE DATA

No.	R	Δ	T	L
40	3500.00′	07°01′17"	214.73′	428.92′
41	5000.00′	04°39′19"	203.23′	406.24′

LINE DATA

No.	BEARING	DISTANCE
49	N 48°01′01" W	400.80′

NOTES:

1. ROW SHOWN REPRESENTS THE MINIMUM ANTICIPATED ROW REQUIREMENTS. ACCURATE ROW AND ACCESS DATA WILL BE MADE AVAILABLE PRIOR TO NOTICE TO PROCEED.
2. SEE DRAINAGE LAYOUT FOR DRAINAGE DETAILS.

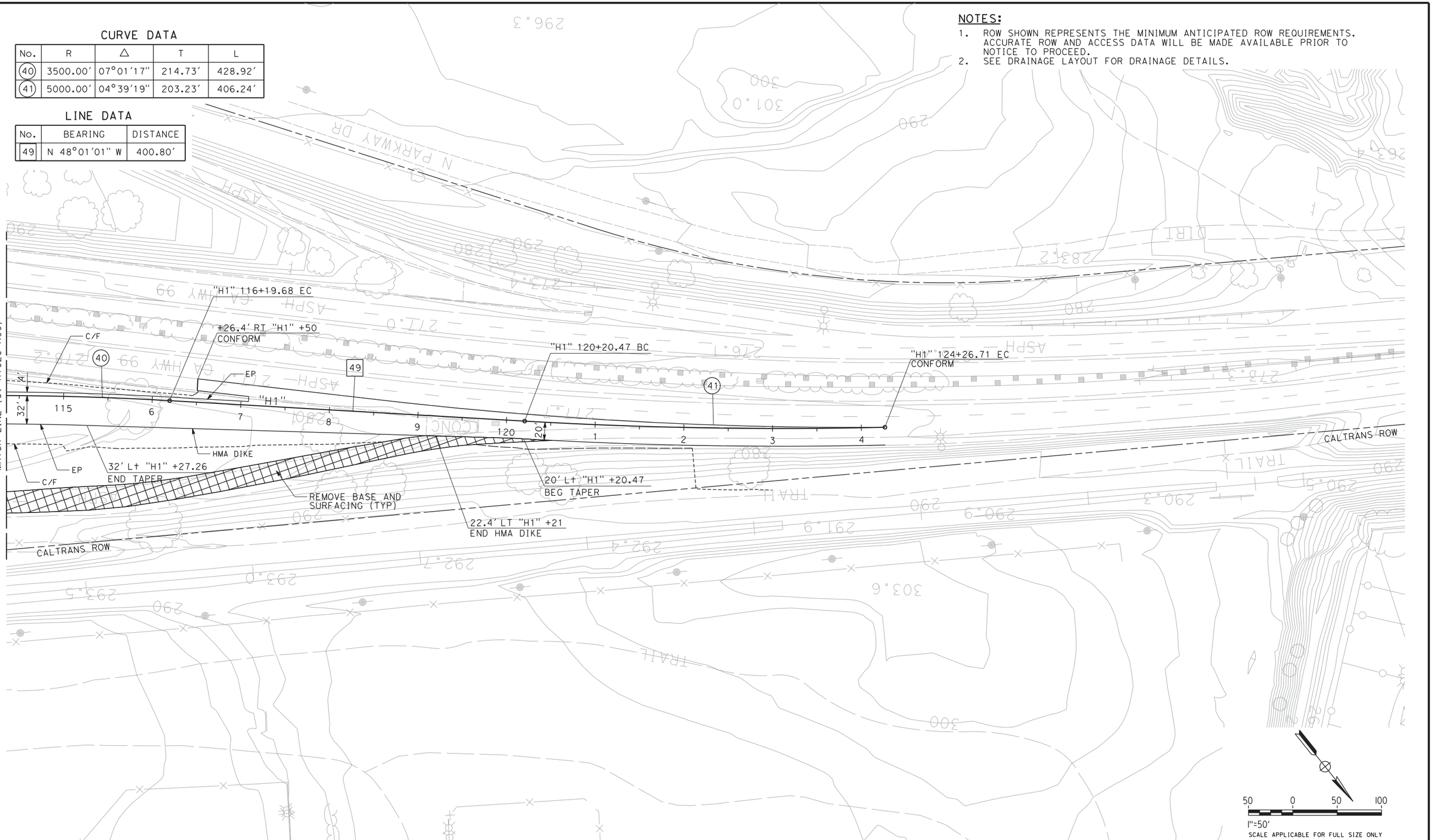

REV	DATE	BY	CHK	APP	DESCRIPTION

DESIGNED BY G. MANOREK
DRAWN BY R. MITRY
CHECKED BY L. HEUSTON
IN CHARGE F. NOBARI
DATE 11/22/11

PROPOSED PRELIMINARY DESIGN

NOT FOR CONSTRUCTION

AECOM Technical Services, Inc.
2020 L Street, Suite 300
Sacramento, CA 95811
CH2MHILL

CALIFORNIA HIGH-SPEED RAIL AUTHORITY

CALIFORNIA HIGH-SPEED TRAIN PROJECT
SIERRA SUBDIVISION
PACKAGE 1A
ROADWAY
LAYOUTS
SR 99 - RAMPS

CONTRACT NO.
DRAWING NO. CV-R1021-R99
SCALE AS SHOWN
SHEET NO.

ychiu 11/16/2011 2:01:57 PM CAHSRP-R1.TBL CHSR_half_black.plt C:\Documents and Settings\ychiu\My Documents\NDMProj\356751 - California High Speed Rail - SR99 Improvements\15-CV-R1021-R99.dgn

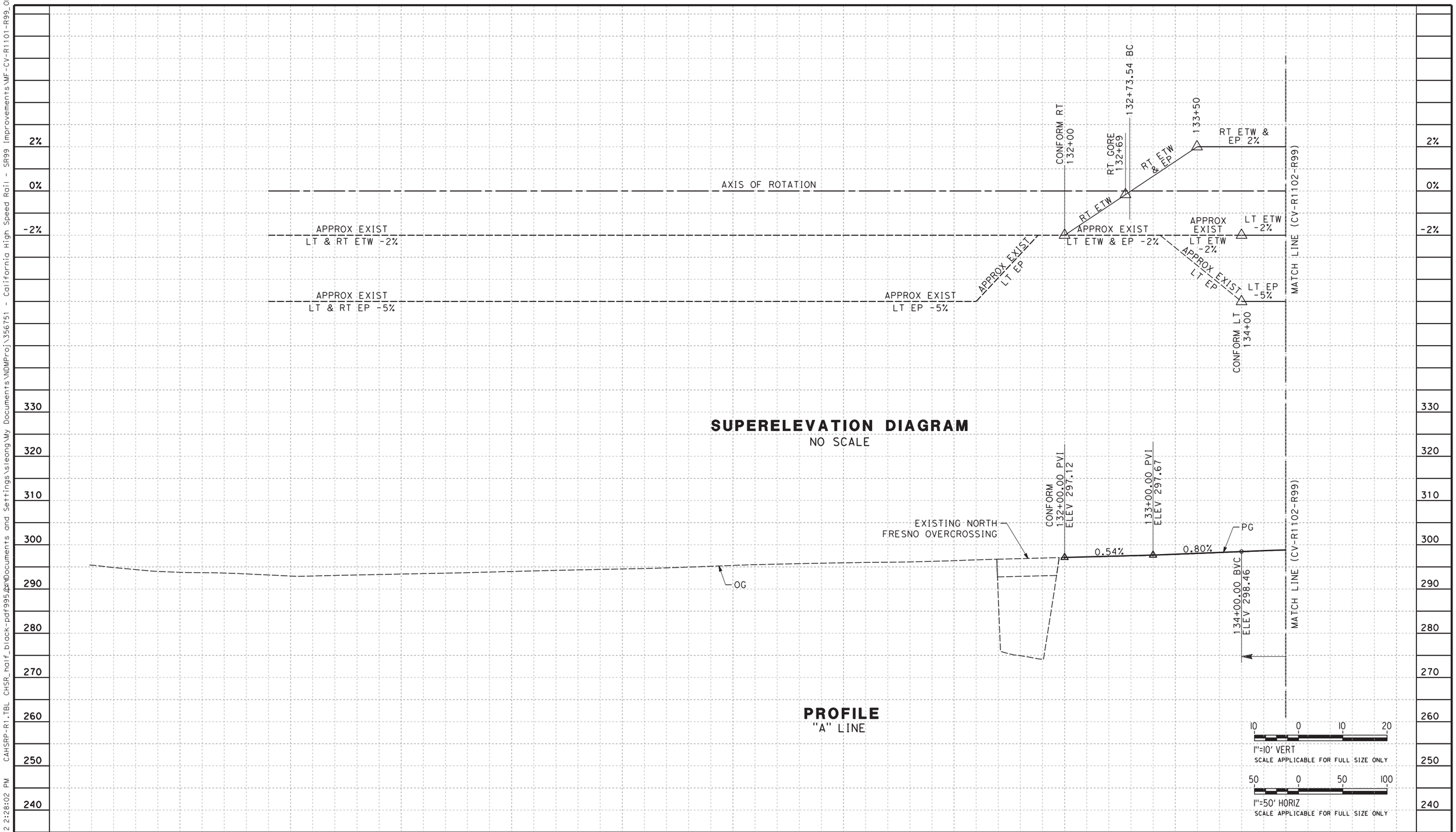

REV	DATE	BY	CHK	APP	DESCRIPTION

DESIGNED BY G. MANOREK
DRAWN BY B. CHAN
CHECKED BY L. HEUSTON
IN CHARGE F. NOBARI
DATE 2/17/12

PROPOSED PRELIMINARY DESIGN

NOT FOR CONSTRUCTION

AECOM Technical Services, Inc.
2020 L Street, Suite 300
Sacramento, CA 95811
CH2MHILL

CALIFORNIA HIGH-SPEED RAIL AUTHORITY

CALIFORNIA HIGH-SPEED TRAIN PROJECT
SIERRA SUBDIVISION
PACKAGE 1A
ROADWAY
PROFILE AND SUPERELEVATION
SR 99 - HIGHWAY "A"

CONTRACT NO.
DRAWING NO. CV-R1101-R99
SCALE AS SHOWN
SHEET NO.

sleong 2/13/2012 2:28:02 PM CAHSRP-R1.TBL CHSR_half_black-pdf995.pc3 C:\Documents and Settings\sleong\My Documents\NDMProj\356751 - California High Speed Rail - SR99 Improvements\WF-CV-R1101-R99_OPTIO

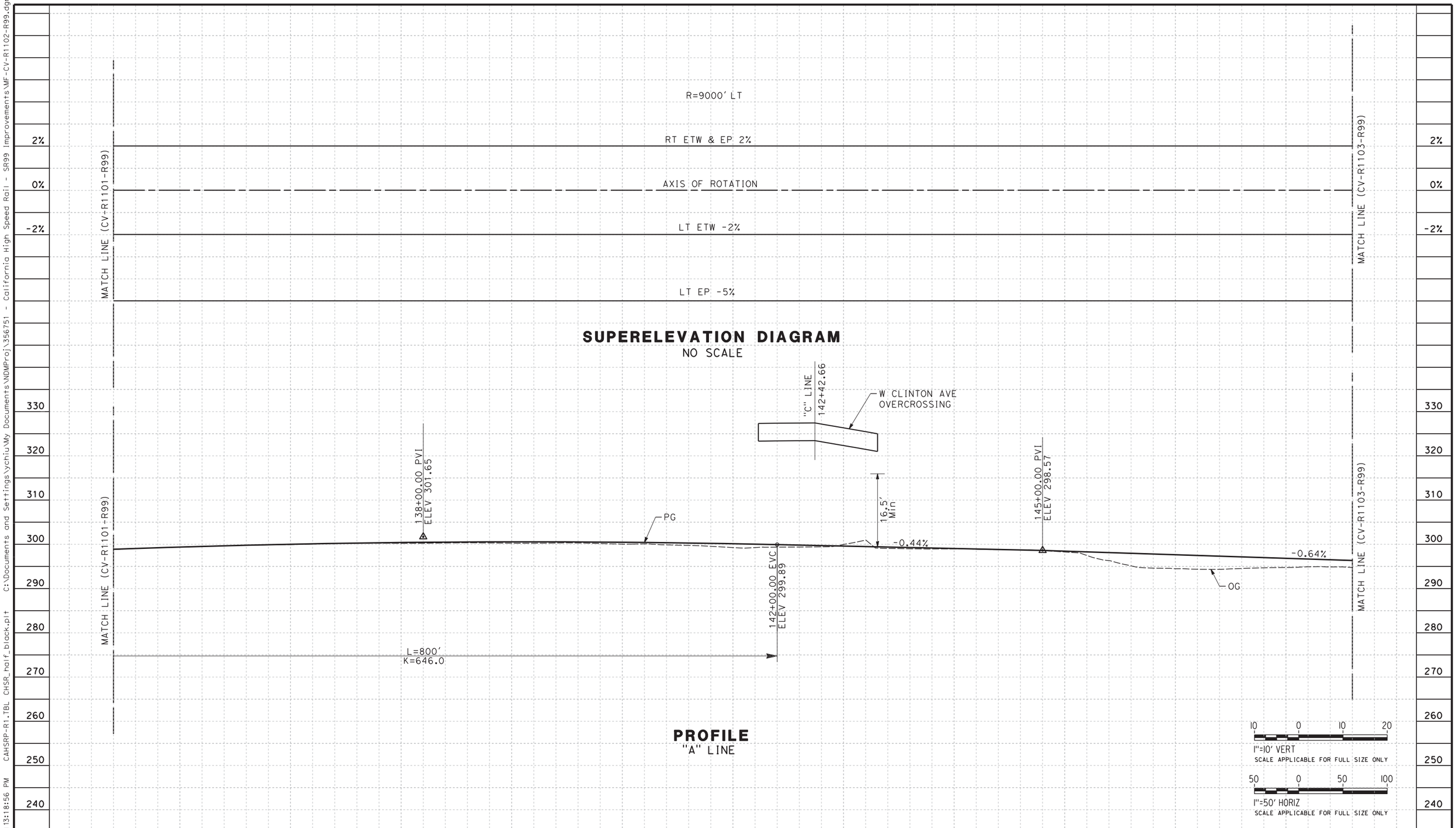

REV	DATE	BY	CHK	APP	DESCRIPTION

DESIGNED BY G. MANOREK
DRAWN BY B. CHAN
CHECKED BY L. HEUSTON
IN CHARGE F. NOBARI
DATE 11/22/11

PROPOSED PRELIMINARY DESIGN

NOT FOR CONSTRUCTION

AECOM Technical Services, Inc.
2020 L Street, Suite 300
Sacramento, CA 95811
CH2MHILL

CALIFORNIA HIGH-SPEED RAIL AUTHORITY

CALIFORNIA HIGH-SPEED TRAIN PROJECT
SIERRA SUBDIVISION
PACKAGE 1A
ROADWAY
PROFILE AND SUPERELEVATION
SR 99 - HIGHWAY "A"

CONTRACT NO.
DRAWING NO. CV-R1102-R99
SCALE AS SHOWN
SHEET NO.

11/16/2011 3:18:56 PM CAHSRP-R1.TBL CHSR_half_black.plt C:\Documents and Settings\ychiu\My Documents\NDMProj\356751 - California High Speed Rail - SR99 Improvements\MF-CV-R1102-R99.dgn ychiu

11/16/2011 3:18:59 PM CAHSRP-R1.TBL CHSR_half_black.plt C:\Documents and Settings\ychiu\My Documents\NDMProj\356751 - California High Speed Rail - SR99 Improvements\MF-CV-R1103-R99.dgn ychiu

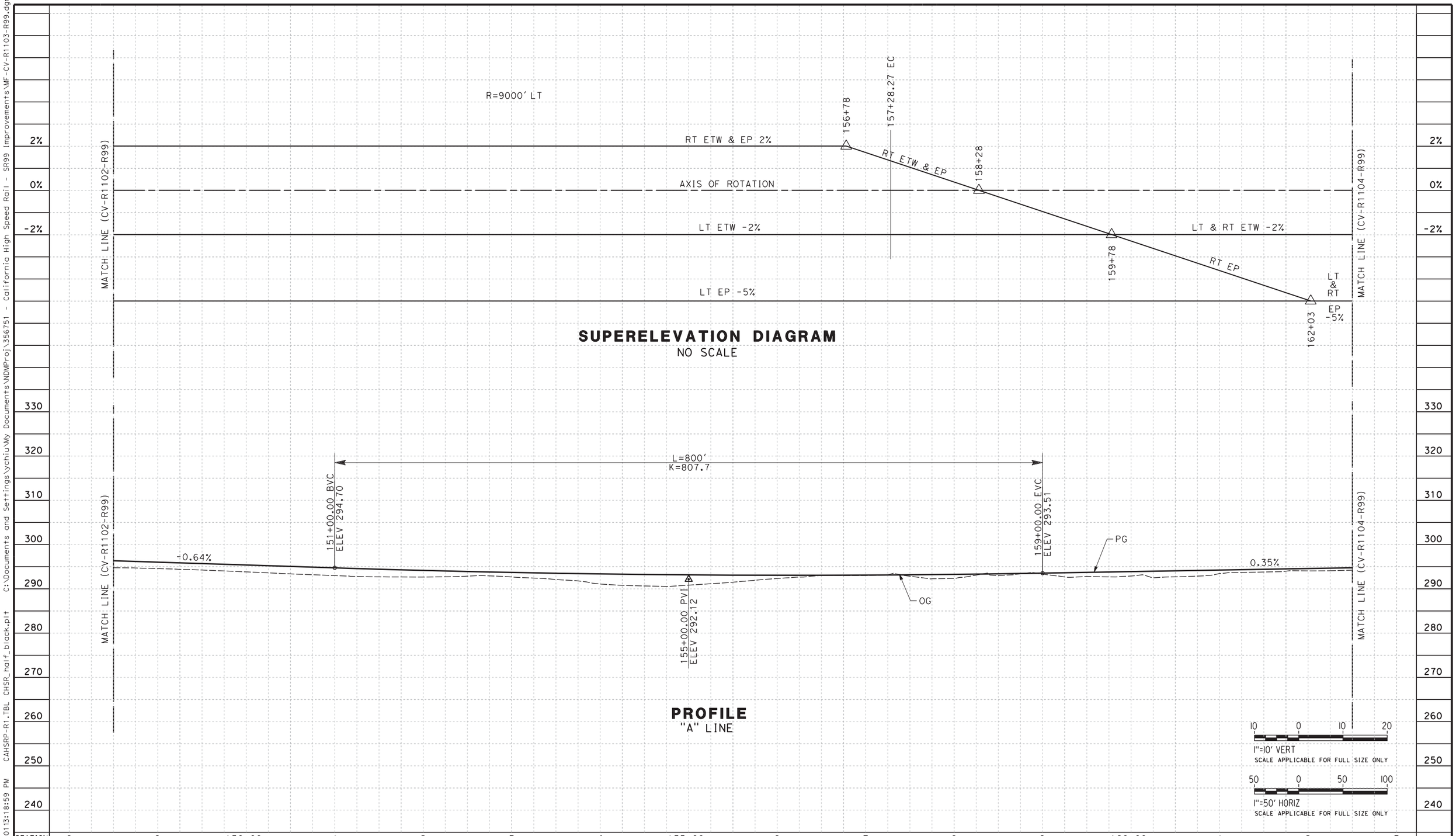

REV	DATE	BY	CHK	APP	DESCRIPTION

DESIGNED BY G. MANOREK
DRAWN BY B. CHAN
CHECKED BY L. HEUSTON
IN CHARGE F. NOBARI
DATE 11/22/11

PROPOSED PRELIMINARY DESIGN

NOT FOR CONSTRUCTION

AECOM Technical Services, Inc.
2020 L Street, Suite 300
Sacramento, CA 95811

CH2MHILL

CALIFORNIA HIGH-SPEED RAIL AUTHORITY

CALIFORNIA HIGH-SPEED TRAIN PROJECT
SIERRA SUBDIVISION
PACKAGE 1A
ROADWAY
PROFILE AND SUPERELEVATION
SR 99 - HIGHWAY "A"

CONTRACT NO.
DRAWING NO. CV-R1103-R99
SCALE AS SHOWN
SHEET NO.

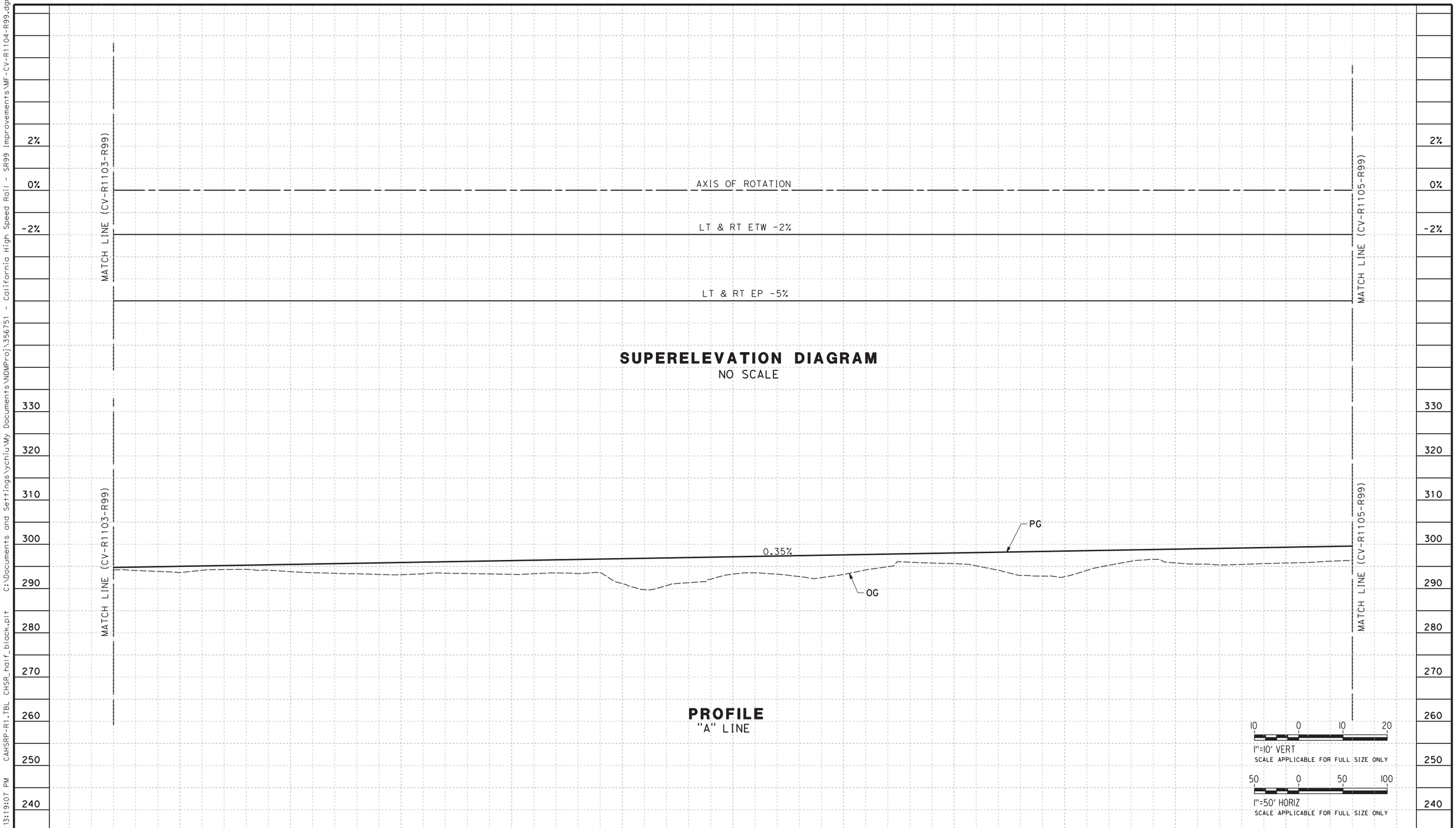

REV	DATE	BY	CHK	APP	DESCRIPTION

DESIGNED BY G. MANOREK
DRAWN BY B. CHAN
CHECKED BY L. HEUSTON
IN CHARGE F. NOBARI
DATE 11/22/11

PROPOSED PRELIMINARY DESIGN

NOT FOR CONSTRUCTION

AECOM Technical Services, Inc.
2020 L Street, Suite 300
Sacramento, CA 95811
CH2MHILL

CALIFORNIA HIGH-SPEED RAIL AUTHORITY

CALIFORNIA HIGH-SPEED TRAIN PROJECT
SIERRA SUBDIVISION
PACKAGE 1A
ROADWAY
PROFILE AND SUPERELEVATION
SR 99 - HIGHWAY "A"

CONTRACT NO.
DRAWING NO. CV-R1104-R99
SCALE AS SHOWN
SHEET NO.

ychiu 11/16/2011 3:19:07 PM CAHSRP-R1.TBL CHSR_half_black.plt C:\Documents and Settings\ychiu\My Documents\NDMProj\356751 - California High Speed Rail - SR99 Improvements\MF-CV-R1104-R99.dgn

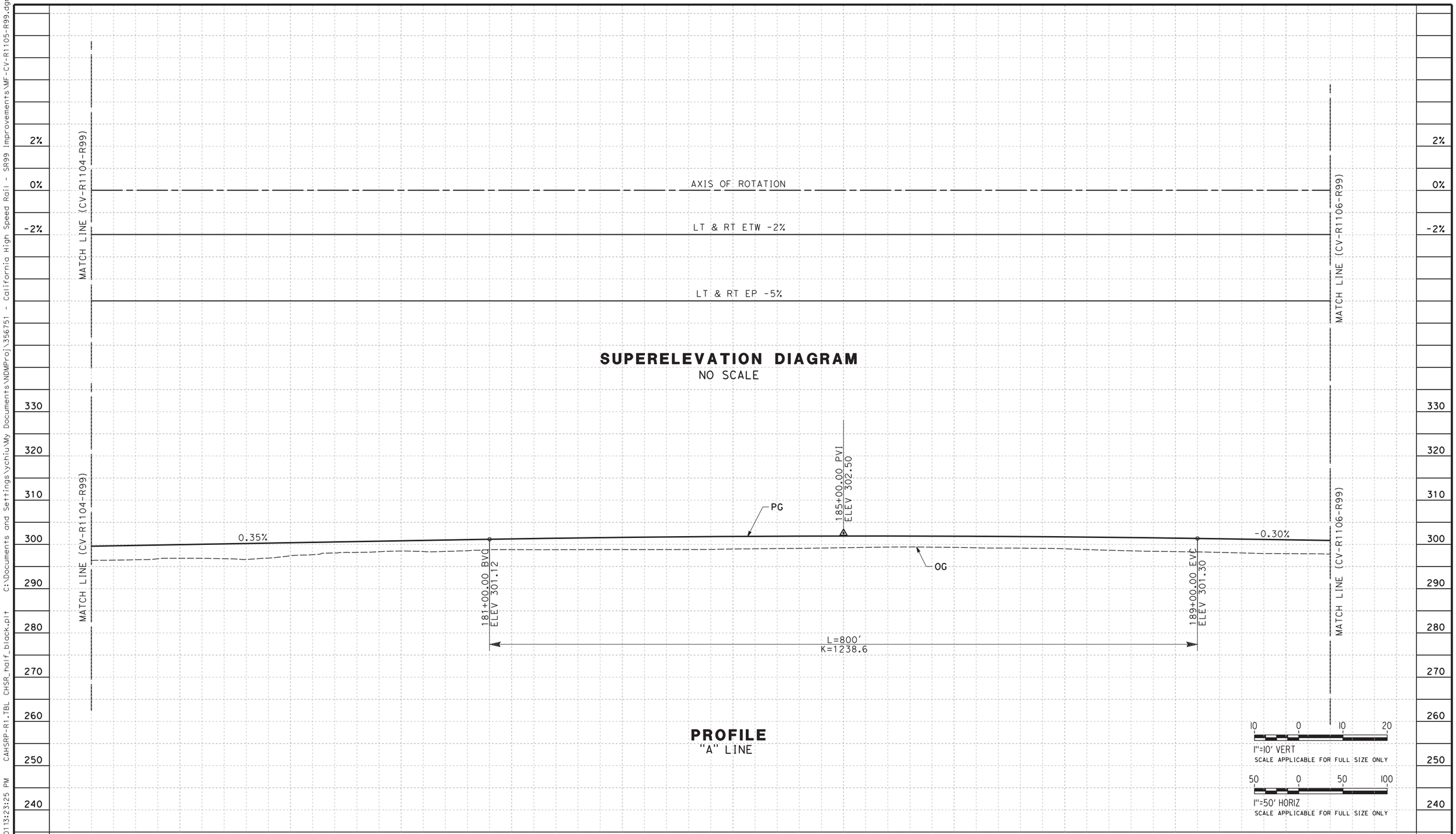

REV	DATE	BY	CHK	APP	DESCRIPTION

DESIGNED BY G. MANOREK
DRAWN BY B. CHAN
CHECKED BY L. HEUSTON
IN CHARGE F. NOBARI
DATE 11/22/11

PROPOSED PRELIMINARY DESIGN

NOT FOR CONSTRUCTION

AECOM Technical Services, Inc.
2020 L Street, Suite 300
Sacramento, CA 95811
CH2MHILL

CALIFORNIA HIGH-SPEED RAIL AUTHORITY

CALIFORNIA HIGH-SPEED TRAIN PROJECT
SIERRA SUBDIVISION
PACKAGE 1A
ROADWAY
PROFILE AND SUPERELEVATION
SR 99 - HIGHWAY "A"

CONTRACT NO.
DRAWING NO. CV-R1105-R99
SCALE AS SHOWN
SHEET NO.

11/16/2011 3:23:25 PM CAHSRP-R1.TBL CHSR_half_black.plt C:\Documents and Settings\ychiu\My Documents\NDMProj\356751 - California High Speed Rail - SR99 Improvements\MF-CV-R1105-R99.dgn
ychiu

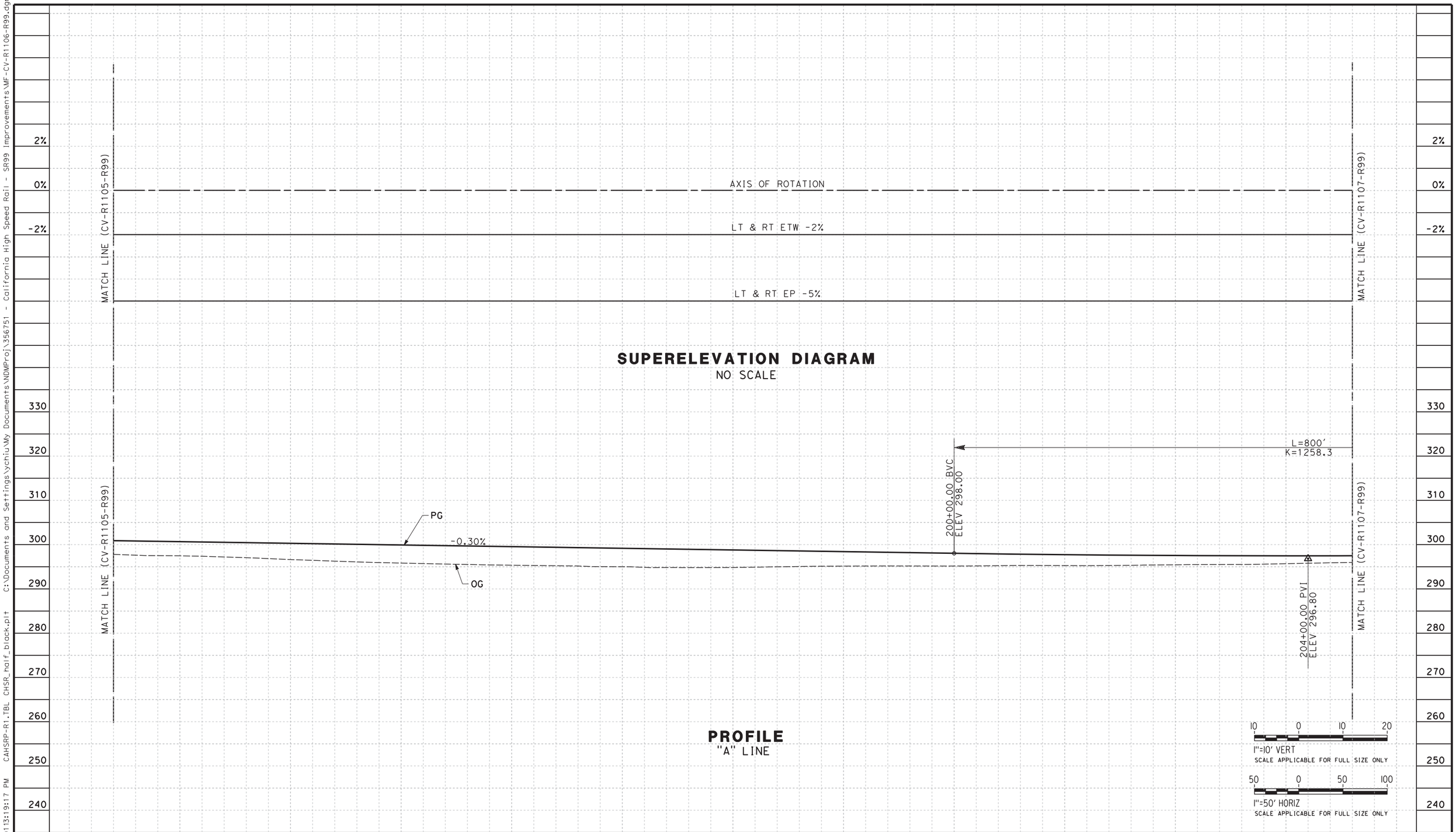

REV	DATE	BY	CHK	APP	DESCRIPTION

DESIGNED BY G. MANOREK
DRAWN BY B. CHAN
CHECKED BY L. HEUSTON
IN CHARGE F. NOBARI
DATE 11/22/11

PROPOSED PRELIMINARY DESIGN

NOT FOR CONSTRUCTION

AECOM Technical Services, Inc.
2020 L Street, Suite 300
Sacramento, CA 95811

CH2MHILL

CALIFORNIA HIGH-SPEED RAIL AUTHORITY

CALIFORNIA HIGH-SPEED TRAIN PROJECT
SIERRA SUBDIVISION
PACKAGE 1A
ROADWAY
PROFILE AND SUPERELEVATION
SR 99 - HIGHWAY "A"

CONTRACT NO.
DRAWING NO. CV-R1106-R99
SCALE AS SHOWN
SHEET NO.

ychiu 11/16/2011 3:19:17 PM CAHSRP-R1.TBL CHSR_half_black.plt C:\Documents and Settings\ychiu\My Documents\NDMProj\356751 - California High Speed Rail - SR99 Improvements\MF-CV-R1106-R99.dgn

11/16/2011 3:23:45 PM CAHSRP-R1.TBL CHSR_half_black.plt C:\Documents and Settings\ychiu\My Documents\NDMProj\356751 - California High Speed Rail - SR99 Improvements\MF-CV-R1107-R99.dgn
ychiu

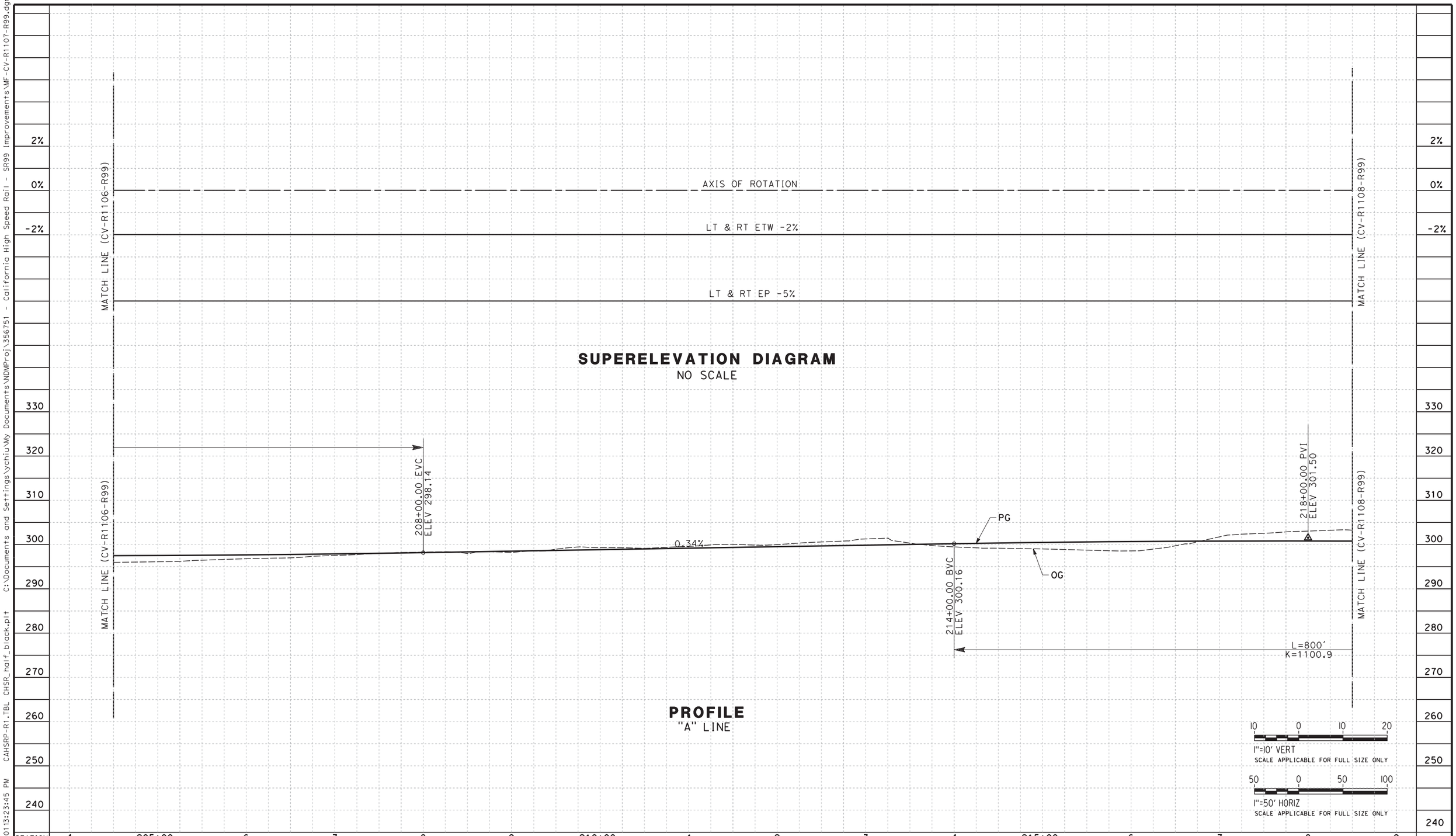

REV	DATE	BY	CHK	APP	DESCRIPTION

DESIGNED BY G. MANOREK
DRAWN BY B. CHAN
CHECKED BY L. HEUSTON
IN CHARGE F. NOBARI
DATE 11/22/11

PROPOSED PRELIMINARY DESIGN

NOT FOR CONSTRUCTION

AECOM Technical Services, Inc.
2020 L Street, Suite 300
Sacramento, CA 95811
CH2MHILL

CALIFORNIA HIGH-SPEED RAIL AUTHORITY

CALIFORNIA HIGH-SPEED TRAIN PROJECT
SIERRA SUBDIVISION
PACKAGE 1A
ROADWAY
PROFILE AND SUPERELEVATION
SR 99 - HIGHWAY "A"

CONTRACT NO.
DRAWING NO. CV-R1107-R99
SCALE AS SHOWN
SHEET NO.

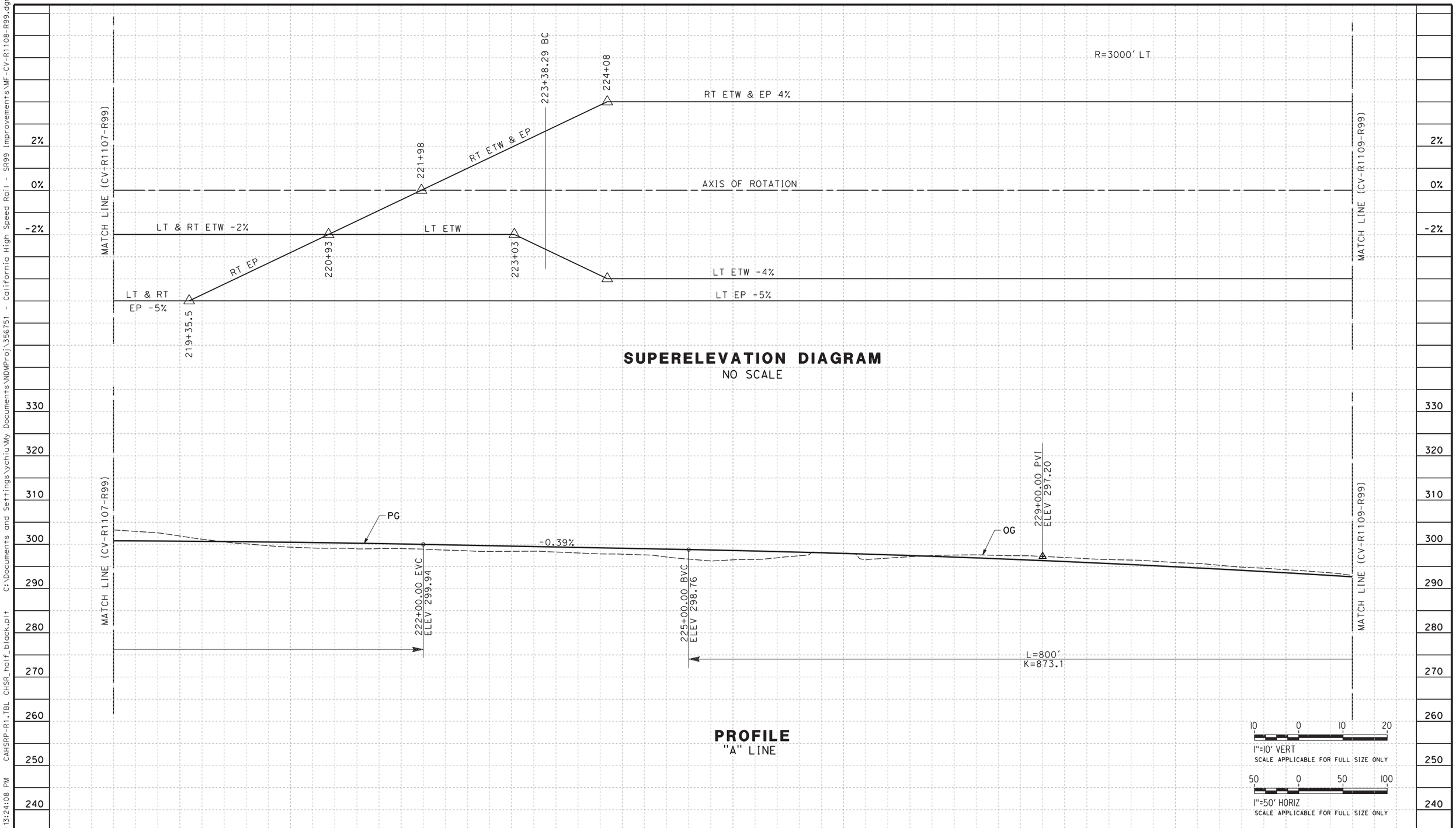

REV	DATE	BY	CHK	APP	DESCRIPTION

DESIGNED BY G. MANOREK
DRAWN BY B. CHAN
CHECKED BY L. HEUSTON
IN CHARGE F. NOBARI
DATE 11/22/11

PROPOSED PRELIMINARY DESIGN

NOT FOR CONSTRUCTION

AECOM Technical Services, Inc.
2020 L Street, Suite 300
Sacramento, CA 95811

CH2MHILL

CALIFORNIA HIGH-SPEED RAIL AUTHORITY

CALIFORNIA HIGH-SPEED TRAIN PROJECT
SIERRA SUBDIVISION
PACKAGE 1A
ROADWAY
PROFILE AND SUPERELEVATION
SR 99 - HIGHWAY "A"

CONTRACT NO.
DRAWING NO. CV-R1108-R99
SCALE AS SHOWN
SHEET NO.

ychiu 11/16/2011 3:24:08 PM CAHSRP-R1.TBL CHSR_half_black.plt C:\Documents and Settings\ychiu\My Documents\NDMProj\356751 - California High Speed Rail - SR99 Improvements\MF-CV-R1108-R99.dgn

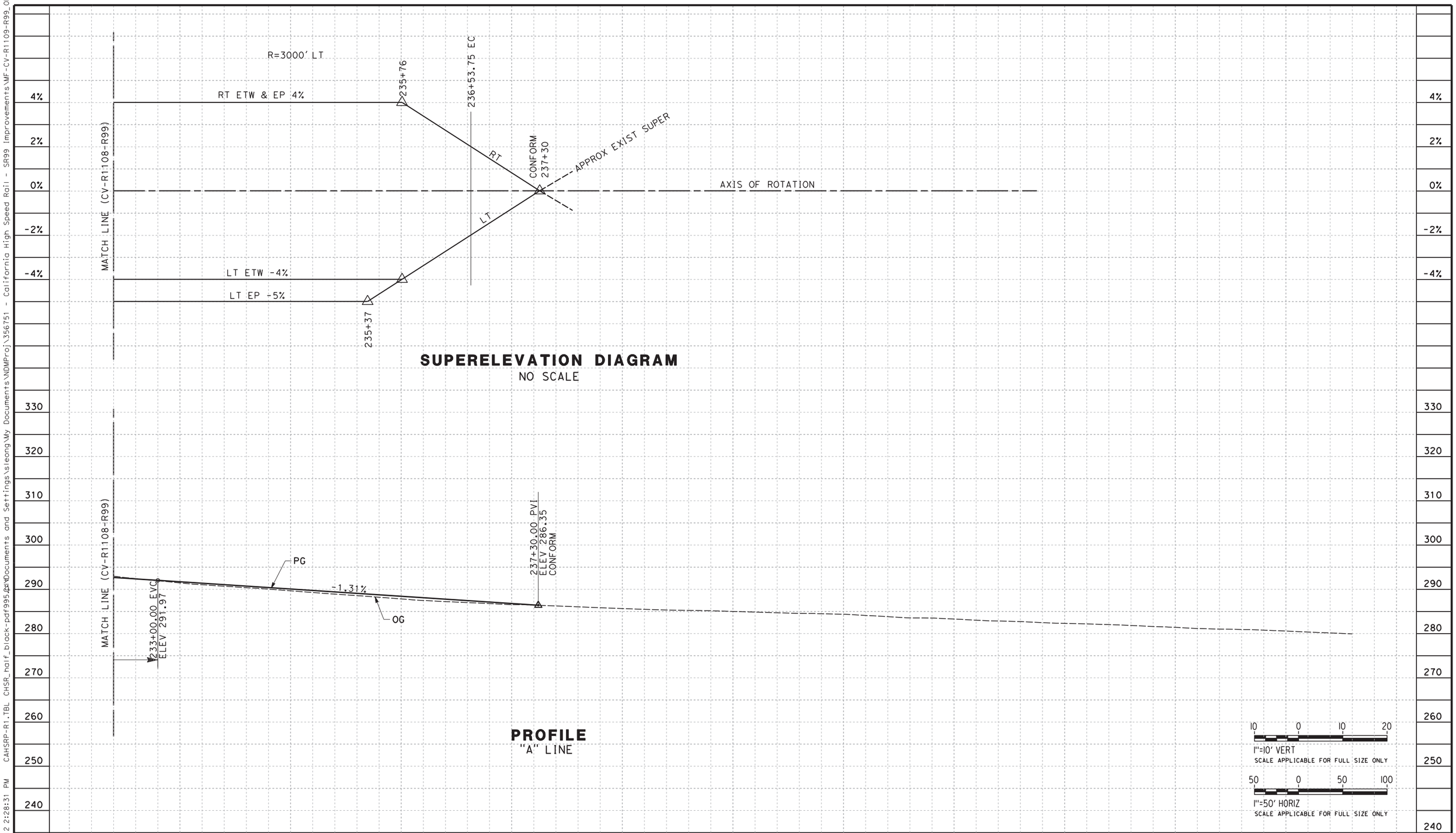

REV	DATE	BY	CHK	APP	DESCRIPTION

DESIGNED BY G. MANOREK
DRAWN BY B. CHAN
CHECKED BY L. HEUSTON
IN CHARGE F. NOBARI
DATE 2/17/12

PROPOSED PRELIMINARY DESIGN

NOT FOR CONSTRUCTION

AECOM Technical Services, Inc.
2020 L Street, Suite 300
Sacramento, CA 95811

CH2MHILL

CALIFORNIA HIGH-SPEED RAIL AUTHORITY

CALIFORNIA HIGH-SPEED TRAIN PROJECT
SIERRA SUBDIVISION
PACKAGE 1A
ROADWAY
PROFILE AND SUPERELEVATION
SR 99 - HIGHWAY "A"

CONTRACT NO.
DRAWING NO. CV-R1109-R99
SCALE AS SHOWN
SHEET NO.

2/13/2012 2:28:31 PM CAHSRP-R1.TBL CHSR_half_black-pdf995.pc3 C:\Documents and Settings\sleong\My Documents\NDMProj\356751 - California High Speed Rail - SR99 Improvements\WF-CV-R1109-R99_OPTIO
sleong

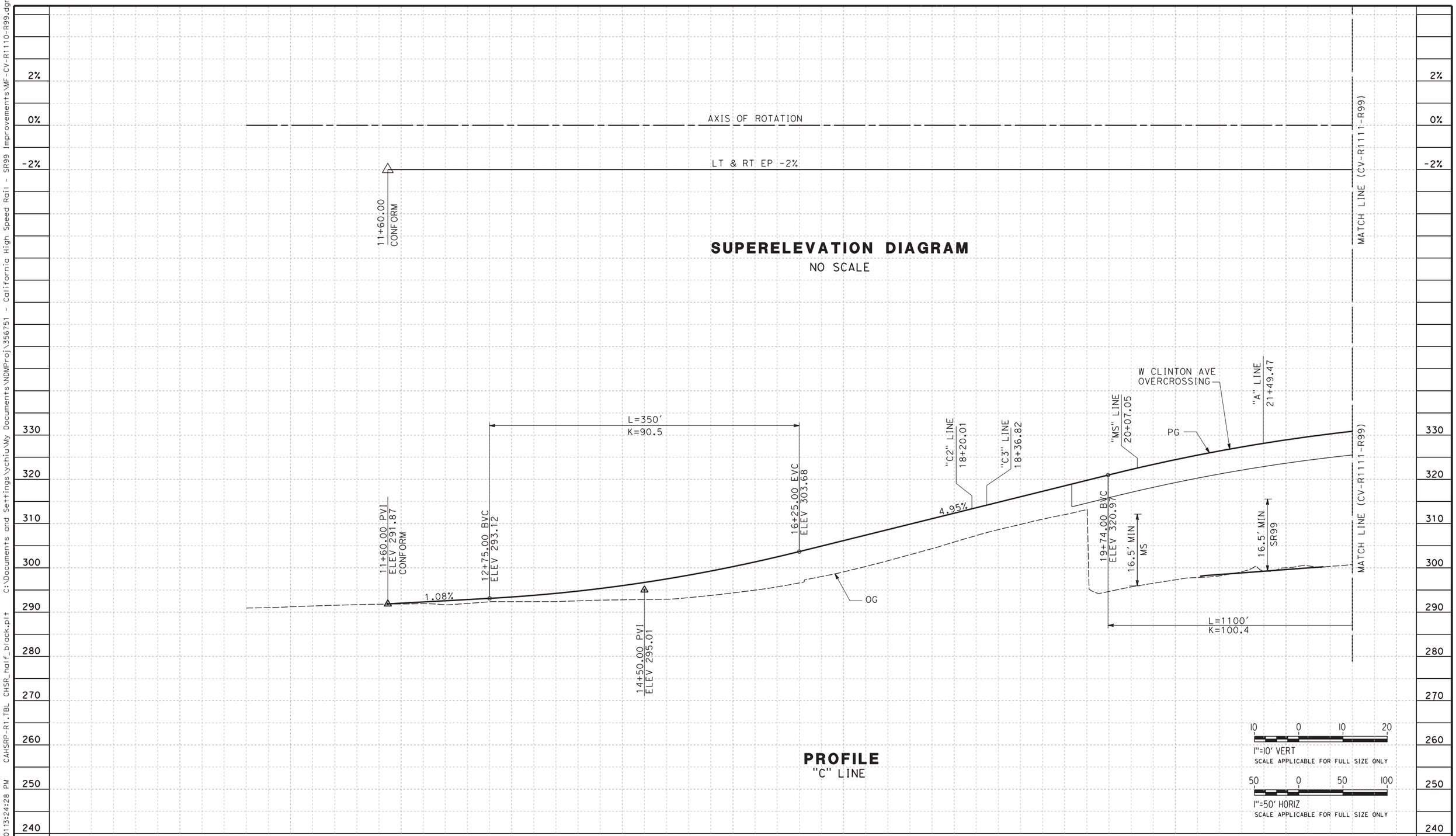

REV	DATE	BY	CHK	APP	DESCRIPTION

DESIGNED BY G. MANOREK
DRAWN BY B. CHAN
CHECKED BY L. HEUSTON
IN CHARGE F. NOBARI
DATE 11/22/11

PROPOSED PRELIMINARY DESIGN

NOT FOR CONSTRUCTION

AECOM Technical Services, Inc.
2020 L Street, Suite 300
Sacramento, CA 95811

CH2MHILL

CALIFORNIA HIGH-SPEED RAIL AUTHORITY

CALIFORNIA HIGH-SPEED TRAIN PROJECT
SIERRA SUBDIVISION
PACKAGE 1A
ROADWAY
PROFILE AND SUPERELEVATION
SR 99 - W CLINTON AVE "C"

CONTRACT NO.
DRAWING NO. CV-R1110-R99
SCALE AS SHOWN
SHEET NO.

ychiu 11/16/2013 24:28 PM CAHSRP-R1.TBL CHSR_half_black.plt C:\Documents and Settings\ychiu\My Documents\NDMProj\356751 - California High Speed Rail - SR99 Improvements\MF-CV-R1110-R99.dgn

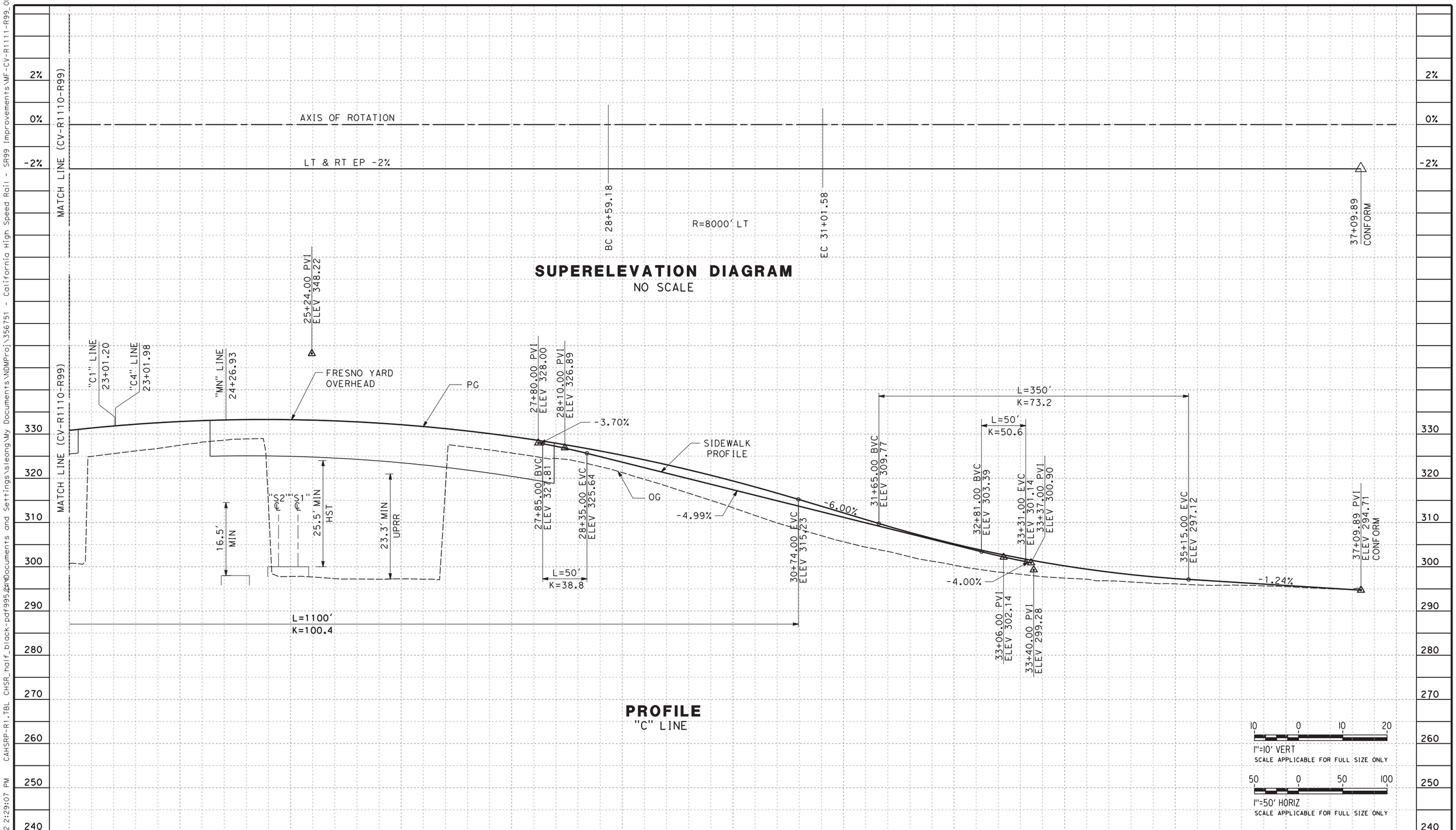

REV	DATE	BY	CHK	APP	DESCRIPTION

DESIGNED BY G. MANOREK
DRAWN BY B. CHAN
CHECKED BY L. HEUSTON
IN CHARGE F. NOBARI
DATE 2/17/12

PROPOSED PRELIMINARY DESIGN

NOT FOR CONSTRUCTION

AECOM Technical Services, Inc.
2020 L Street, Suite 300
Sacramento, CA 95811
CH2MHILL

CALIFORNIA HIGH-SPEED RAIL AUTHORITY

CALIFORNIA HIGH-SPEED TRAIN PROJECT
SIERRA SUBDIVISION
PACKAGE 1A
ROADWAY
PROFILE AND SUPERELEVATION
SR 99 - W CLINTON AVE "C"

CONTRACT NO.
DRAWING NO. CV-R1111-R99
SCALE AS SHOWN
SHEET NO.

sleong 2/13/2012 2:29:07 PM CAHSRP-R1.TBL CHSR_half_black-pdf995.pc3 C:\Documents and Settings\sleong\My Documents\MDMProj\356751 - California High Speed Rail - SR99 Improvements\MF-CV-R1111-R99_OPTIO

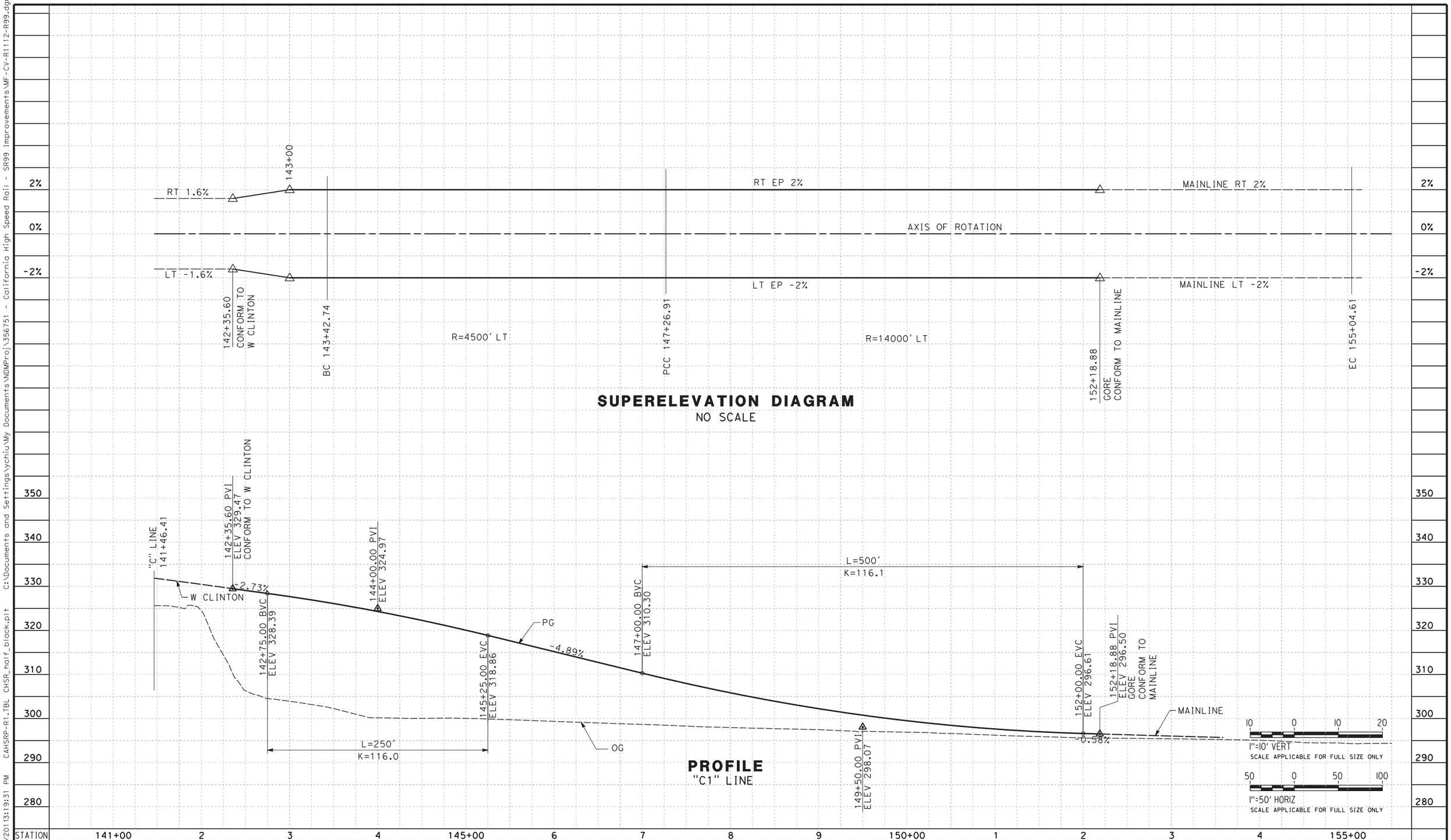

REV	DATE	BY	CHK	APP	DESCRIPTION

DESIGNED BY G. MANOREK
DRAWN BY B. CHAN
CHECKED BY L. HEUSTON
IN CHARGE F. NOBARI
DATE 11/22/11

PROPOSED PRELIMINARY DESIGN

NOT FOR CONSTRUCTION

AECOM Technical Services, Inc.
2020 L Street, Suite 300
Sacramento, CA 95811
CH2MHILL

CALIFORNIA HIGH-SPEED RAIL AUTHORITY

CALIFORNIA HIGH-SPEED TRAIN PROJECT
SIERRA SUBDIVISION
PACKAGE 1A
ROADWAY
PROFILE AND SUPERELEVATION
SR 99 - RAMP "C1"

CONTRACT NO.
DRAWING NO. CV-R1112-R99
SCALE AS SHOWN
SHEET NO.

ychiu 11/16/2011 3:19:31 PM CAHSRP-R1.TBL CHSR_half_black.plt C:\Documents and Settings\ychiu\My Documents\NDMProj\356751 - California High Speed Rail - SR99 Improvements\MF-CV-R1112-R99.dgn

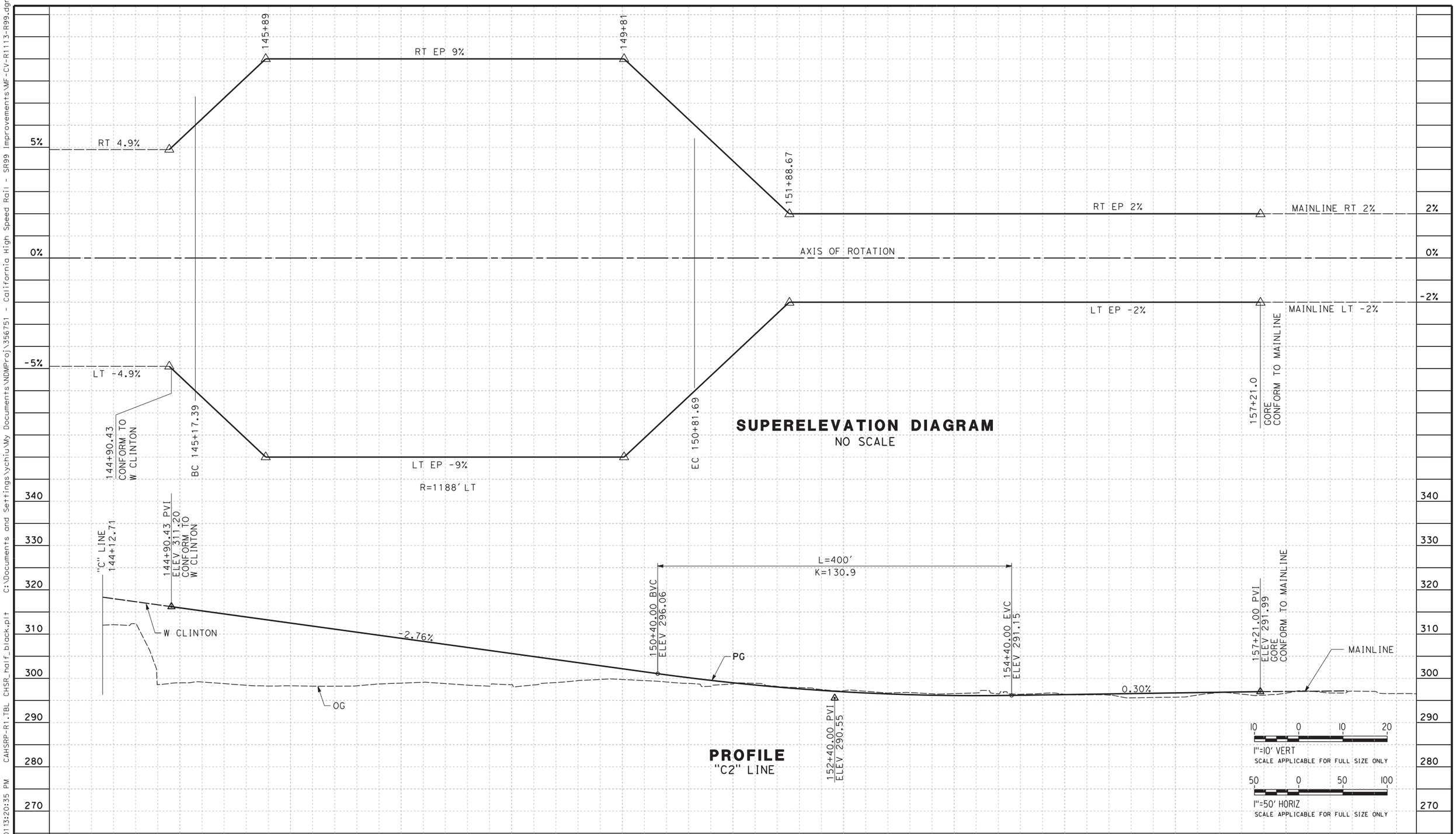

SUPERELEVATION DIAGRAM
NO SCALE

PROFILE
"C2" LINE

REV	DATE	BY	CHK	APP	DESCRIPTION

DESIGNED BY G. MANOREK
DRAWN BY B. CHAN
CHECKED BY L. HEUSTON
IN CHARGE F. NOBARI
DATE 11/22/11

PROPOSED PRELIMINARY DESIGN

NOT FOR CONSTRUCTION

AECOM Technical Services, Inc.
2020 L Street, Suite 300
Sacramento, CA 95811

CH2MHILL

CALIFORNIA HIGH-SPEED RAIL AUTHORITY

CALIFORNIA HIGH-SPEED TRAIN PROJECT
SIERRA SUBDIVISION
PACKAGE 1A
ROADWAY
PROFILE AND SUPERELEVATION
SR 99 - RAMP "C2"

CONTRACT NO.
DRAWING NO. CV-R1113-R99
SCALE AS SHOWN
SHEET NO.

ychiu 11/16/2013 2:20:35 PM CAHSRP-R1.TBL CHSR_half_black.plt C:\Documents and Settings\ychiu\My Documents\NDMProj\356751 - California High Speed Rail - SR99 Improvements\MF-CV-R1113-R99.dgn

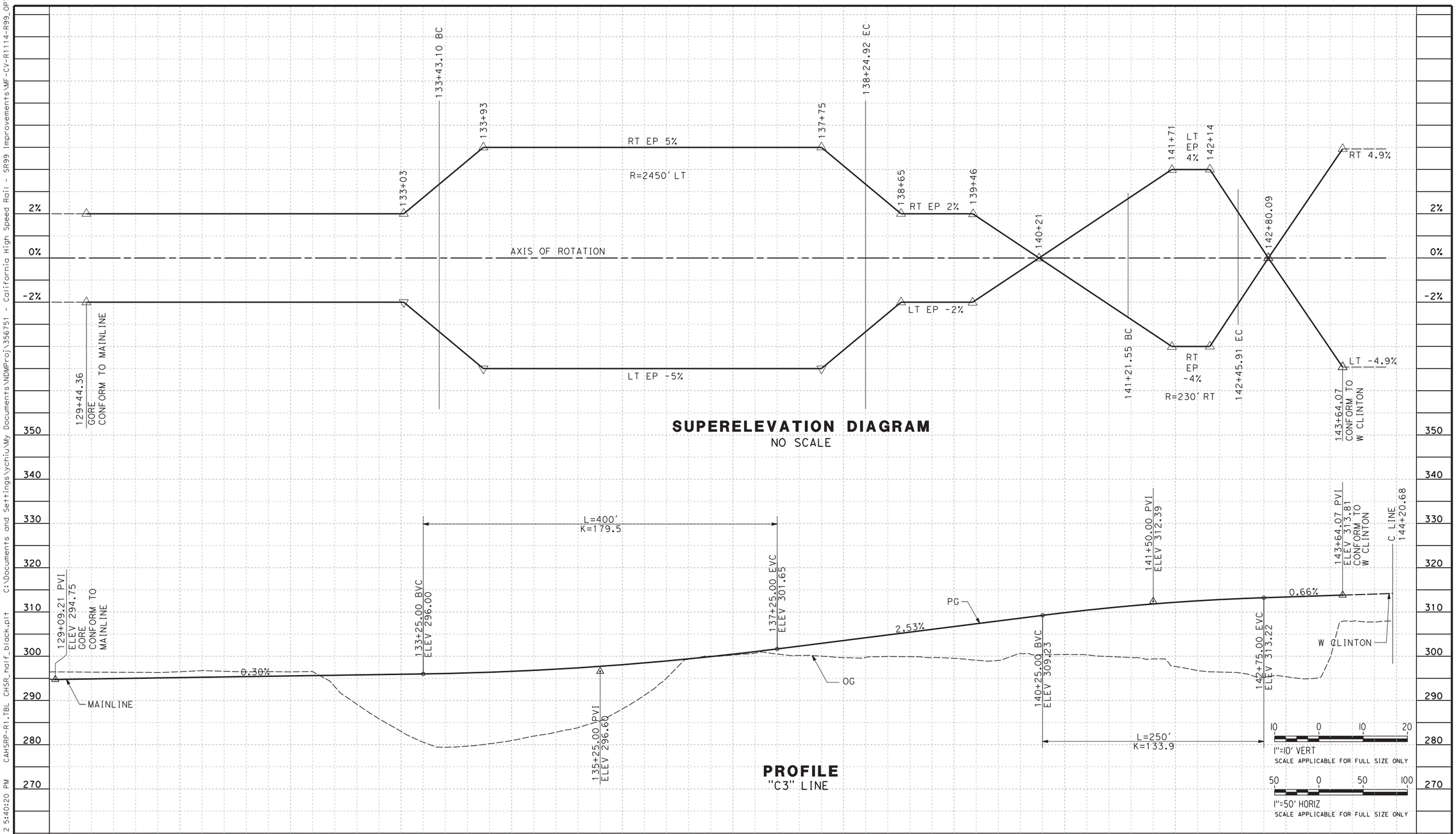

REV	DATE	BY	CHK	APP	DESCRIPTION

DESIGNED BY G. MANOREK
DRAWN BY B. CHAN
CHECKED BY L. HEUSTON
IN CHARGE F. NOBARI
DATE 2/17/12

PROPOSED PRELIMINARY DESIGN

NOT FOR CONSTRUCTION

AECOM Technical Services, Inc.
2020 L Street, Suite 300
Sacramento, CA 95811

CH2MHILL

CALIFORNIA HIGH-SPEED RAIL AUTHORITY

CALIFORNIA HIGH-SPEED TRAIN PROJECT
SIERRA SUBDIVISION
PACKAGE 1A
ROADWAY
PROFILE AND SUPERELEVATION
SR 99 - RAMP "C3"

CONTRACT NO.
DRAWING NO. CV-R1114-R99
SCALE AS SHOWN
SHEET NO.

ychiu 2/16/2012 5:40:20 PM CAHSRP-R1.TBL CHSR_half_black.plt C:\Documents and Settings\ychiu\My Documents\NDMProj\356751 - California High Speed Rail - SR99 Improvements\MF-CV-R1114-R99_OPTION

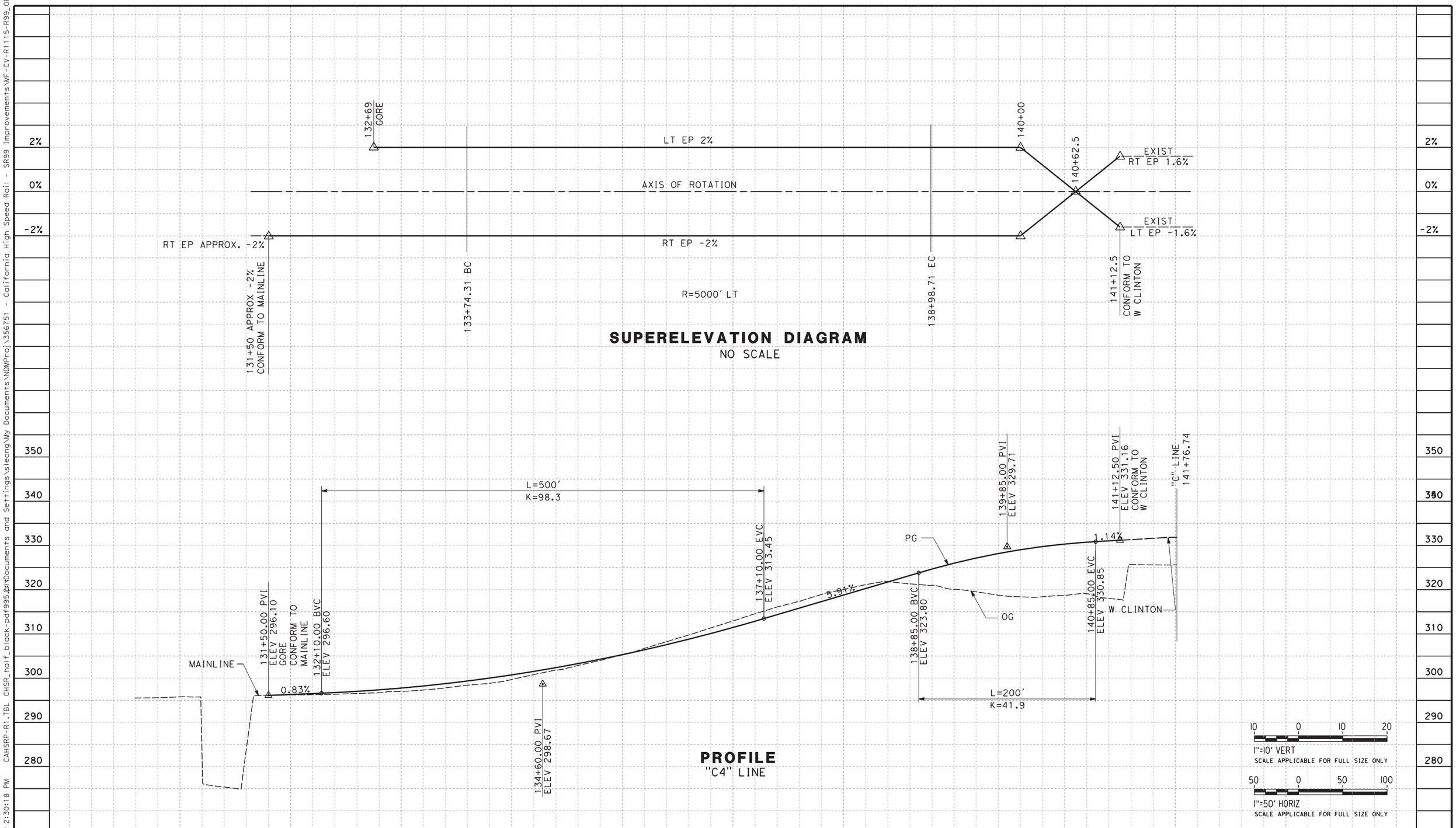

REV	DATE	BY	CHK	APP	DESCRIPTION

DESIGNED BY G. MANOREK
DRAWN BY B. CHAN
CHECKED BY L. HEUSTON
IN CHARGE F. NOBARI
DATE 2/17/12

PROPOSED PRELIMINARY DESIGN

NOT FOR CONSTRUCTION

AECOM Technical Services, Inc.
2020 L Street, Suite 300
Sacramento, CA 95811

CH2MHILL

CALIFORNIA HIGH-SPEED RAIL AUTHORITY

CALIFORNIA HIGH-SPEED TRAIN PROJECT
SIERRA SUBDIVISION
PACKAGE 1A
ROADWAY
PROFILE AND SUPERELEVATION
SR 99 - RAMP "C4"

CONTRACT NO.
DRAWING NO. CV-R1115-R99
SCALE AS SHOWN
SHEET NO.

sleong 2/13/2012 2:30:18 PM CAHSRP-R1.TBL CHSR_half_black-pdf995.pc3 C:\Documents and Settings\sleong\My Documents\NDMProj\356751 - California High Speed Rail - SR99 Improvements\MF-CV-R1115-R99_OPTIO

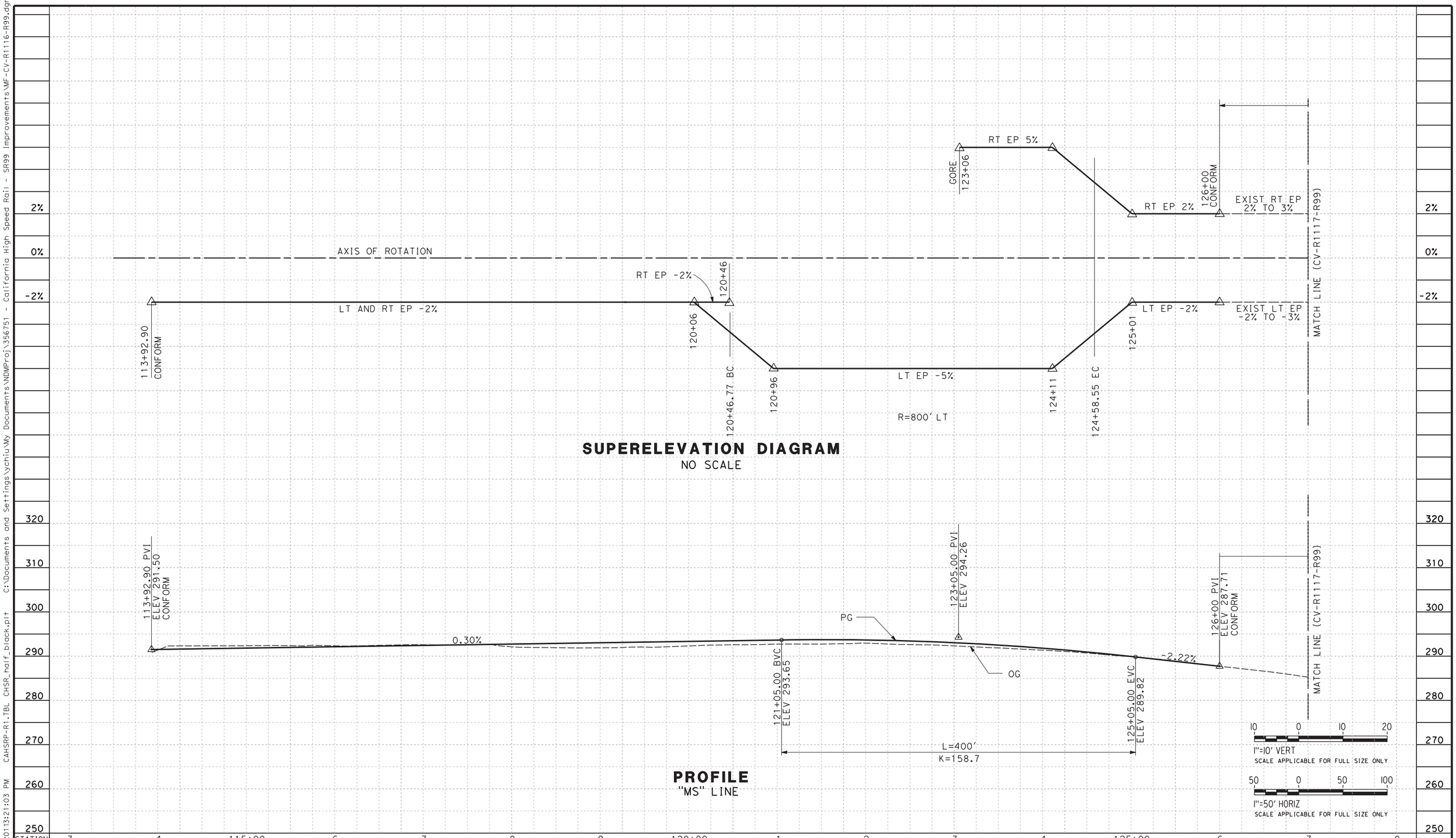

REV	DATE	BY	CHK	APP	DESCRIPTION

DESIGNED BY G. MANOREK
DRAWN BY B. CHAN
CHECKED BY L. HEUSTON
IN CHARGE F. NOBARI
DATE 11/22/11

PROPOSED PRELIMINARY DESIGN

NOT FOR CONSTRUCTION

AECOM Technical Services, Inc.
2020 L Street, Suite 300
Sacramento, CA 95811
CH2MHILL

CALIFORNIA HIGH-SPEED RAIL AUTHORITY

CALIFORNIA HIGH-SPEED TRAIN PROJECT
SIERRA SUBDIVISION
PACKAGE 1A
ROADWAY
PROFILE AND SUPERELEVATION
SR 99 - RAMP "MS"

CONTRACT NO.
DRAWING NO. CV-R1116-R99
SCALE AS SHOWN
SHEET NO.

ychiu 11/16/2013 1:21:03 PM CAHSRP-R1.TBL CHSR_half_black.plt C:\Documents and Settings\ychiu\My Documents\NDMProj\356751 - California High Speed Rail - SR99 Improvements\MF-CV-R1116-R99.dgn

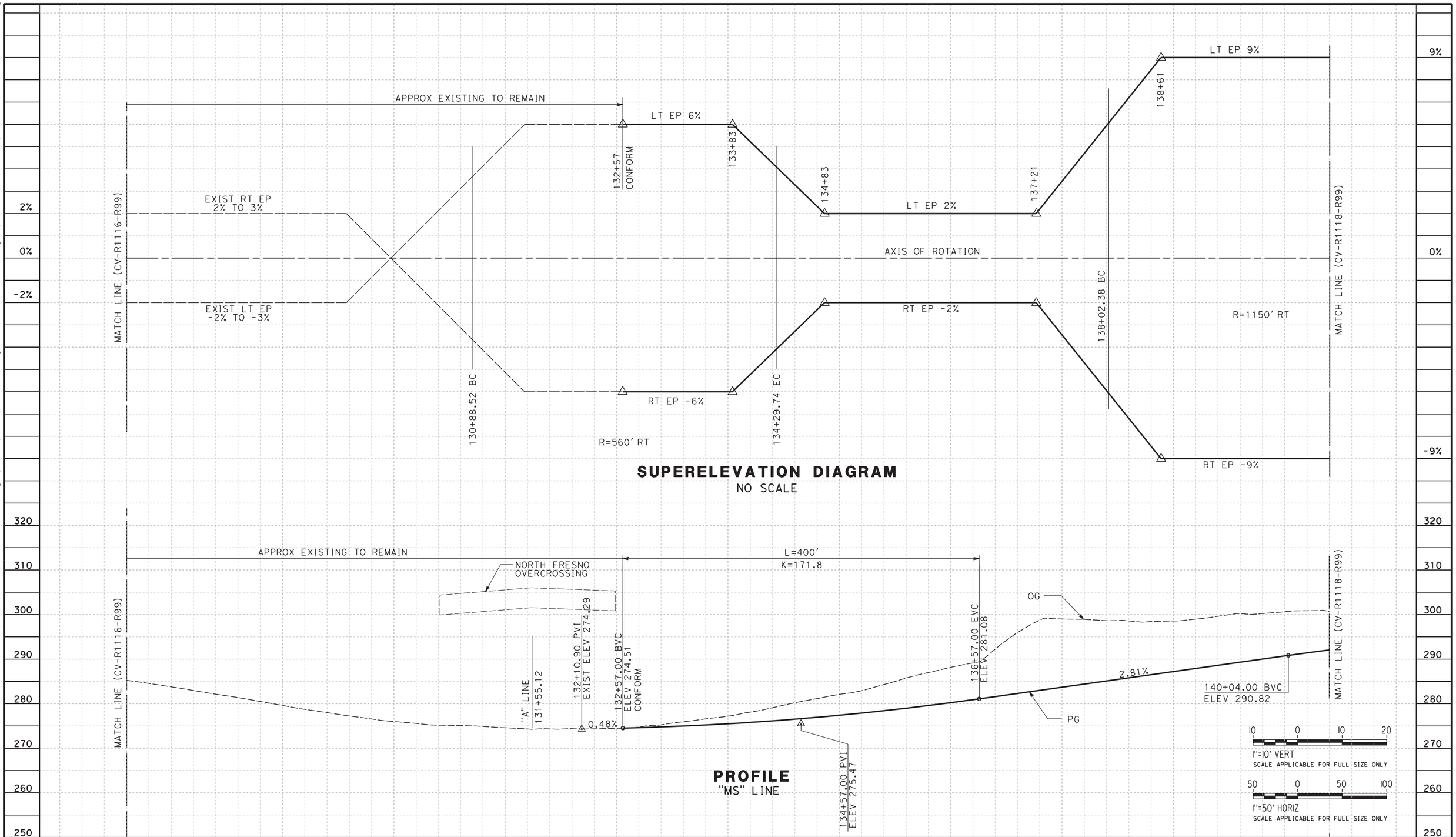

REV	DATE	BY	CHK	APP	DESCRIPTION

DESIGNED BY G. MANOREK
DRAWN BY B. CHAN
CHECKED BY L. HEUSTON
IN CHARGE F. NOBARI
DATE 11/22/11

PROPOSED PRELIMINARY DESIGN

NOT FOR CONSTRUCTION

AECOM Technical Services, Inc.
2020 L Street, Suite 300
Sacramento, CA 95811
CH2MHILL

CALIFORNIA HIGH-SPEED RAIL AUTHORITY

CALIFORNIA HIGH-SPEED TRAIN PROJECT
SIERRA SUBDIVISION
PACKAGE 1A
ROADWAY
PROFILE AND SUPERELEVATION
SR 99 - RAMP "MS"

CONTRACT NO.
DRAWING NO. CV-R1117-R99
SCALE AS SHOWN
SHEET NO.

ychiu 11/16/2011 3:21:06 PM CAHSRP-R1.TBL CHSR_half_black.plt C:\Documents and Settings\ychiu\My Documents\NDMProj\356751 - California High Speed Rail - SR99 Improvements\MF-CV-R1117-R99.dgn

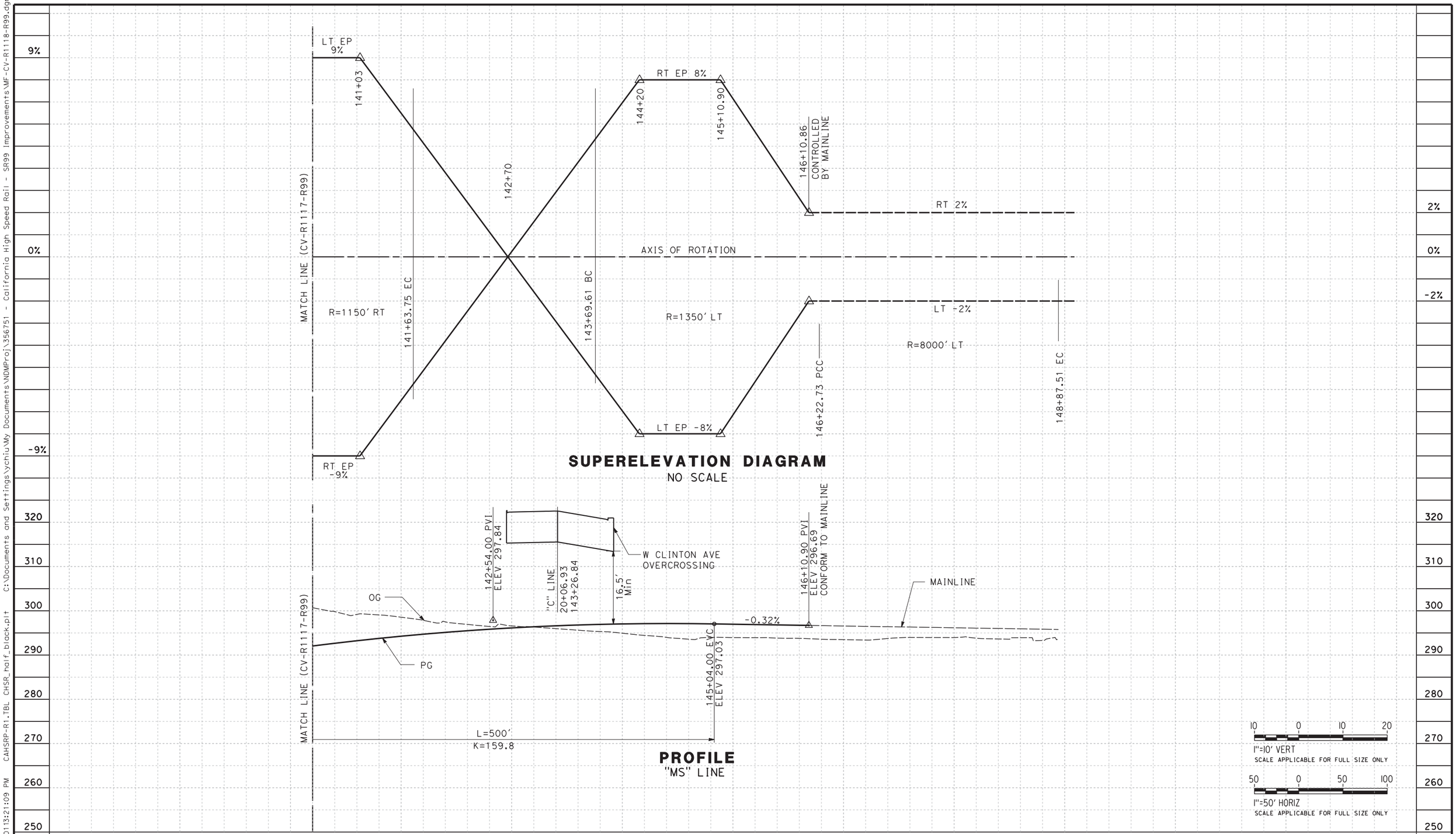

SUPERELEVATION DIAGRAM
NO SCALE

PROFILE
"MS" LINE

REV	DATE	BY	CHK	APP	DESCRIPTION

DESIGNED BY G. MANOREK
DRAWN BY B. CHAN
CHECKED BY L. HEUSTON
IN CHARGE F. NOBARI
DATE 11/22/11

PROPOSED PRELIMINARY DESIGN

NOT FOR CONSTRUCTION

AECOM Technical Services, Inc.
2020 L Street, Suite 300
Sacramento, CA 95811
CH2MHILL

CALIFORNIA HIGH-SPEED RAIL AUTHORITY

CALIFORNIA HIGH-SPEED TRAIN PROJECT
SIERRA SUBDIVISION
PACKAGE 1A
ROADWAY
PROFILE AND SUPERELEVATION
SR 99 - RAMP "MS"

CONTRACT NO.
DRAWING NO. CV-R1118-R99
SCALE AS SHOWN
SHEET NO.

ychiu 11/16/2011 3:21:09 PM CAHSRP-R1.TBL CHSR_half_black.plt C:\Documents and Settings\ychiu\My Documents\NDMProj\356751 - California High Speed Rail - SR99 Improvements\MF-CV-R1118-R99.dgn

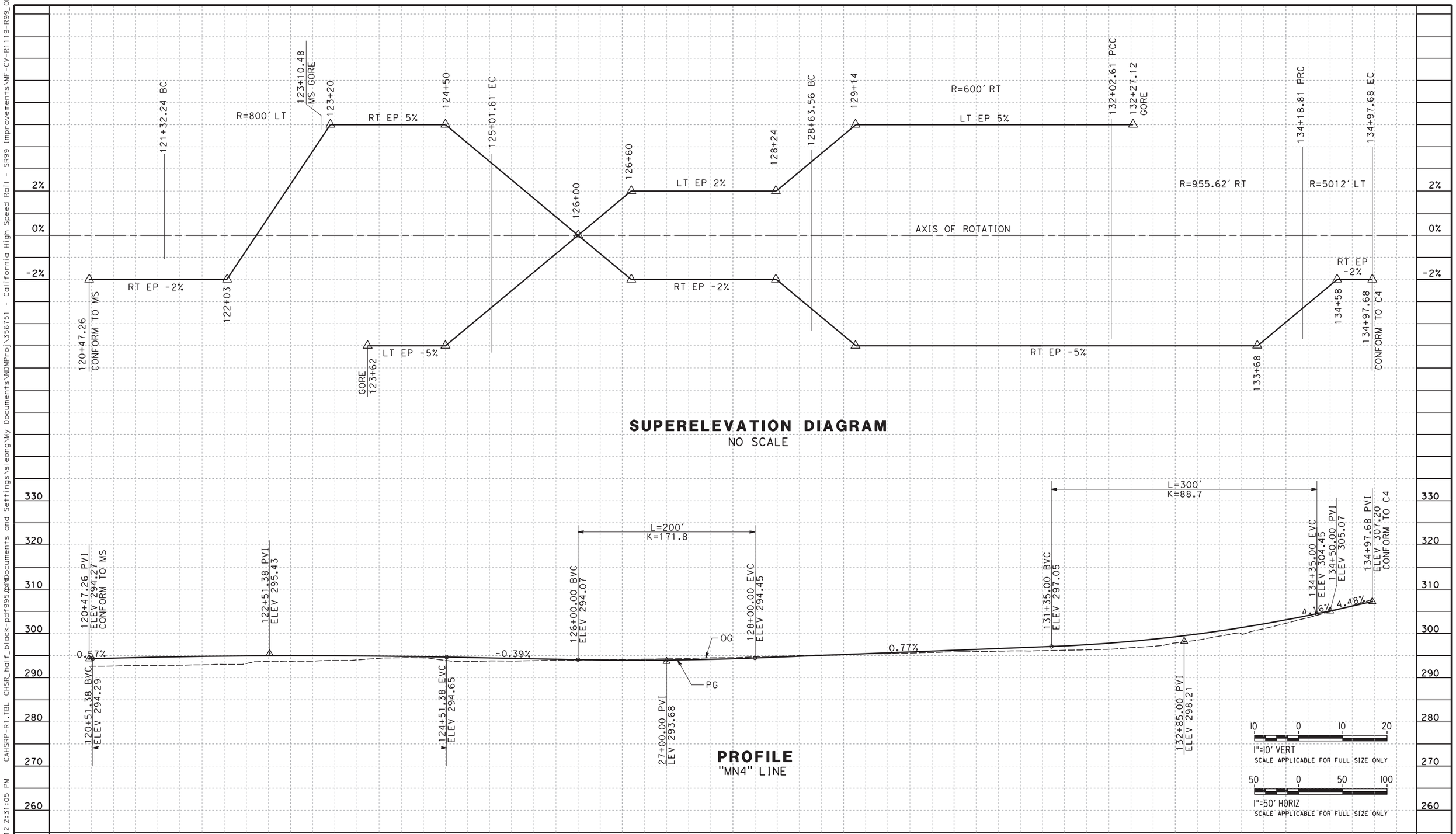

REV	DATE	BY	CHK	APP	DESCRIPTION

DESIGNED BY G. MANOREK
DRAWN BY B. CHAN
CHECKED BY L. HEUSTON
IN CHARGE F. NOBARI
DATE 2/17/12

PROPOSED PRELIMINARY DESIGN

NOT FOR CONSTRUCTION

AECOM Technical Services, Inc.
2020 L Street, Suite 300
Sacramento, CA 95811

CH2MHILL

CALIFORNIA HIGH-SPEED RAIL AUTHORITY

CALIFORNIA HIGH-SPEED TRAIN PROJECT
SIERRA SUBDIVISION
PACKAGE 1A
ROADWAY
PROFILE AND SUPERELEVATION
SR 99 - RAMP "MN4"

CONTRACT NO.
DRAWING NO. CV-R1119-R99
SCALE AS SHOWN
SHEET NO.

sleong 2/13/2012 2:31:05 PM CAHSRP-R1.TBL CHSR_half_black-pdf995.pc3 C:\Documents and Settings\sleong\My Documents\NDMProj\356751 - California High Speed Rail - SR99 Improvements\MF-CV-R1119-R99_OPTIO

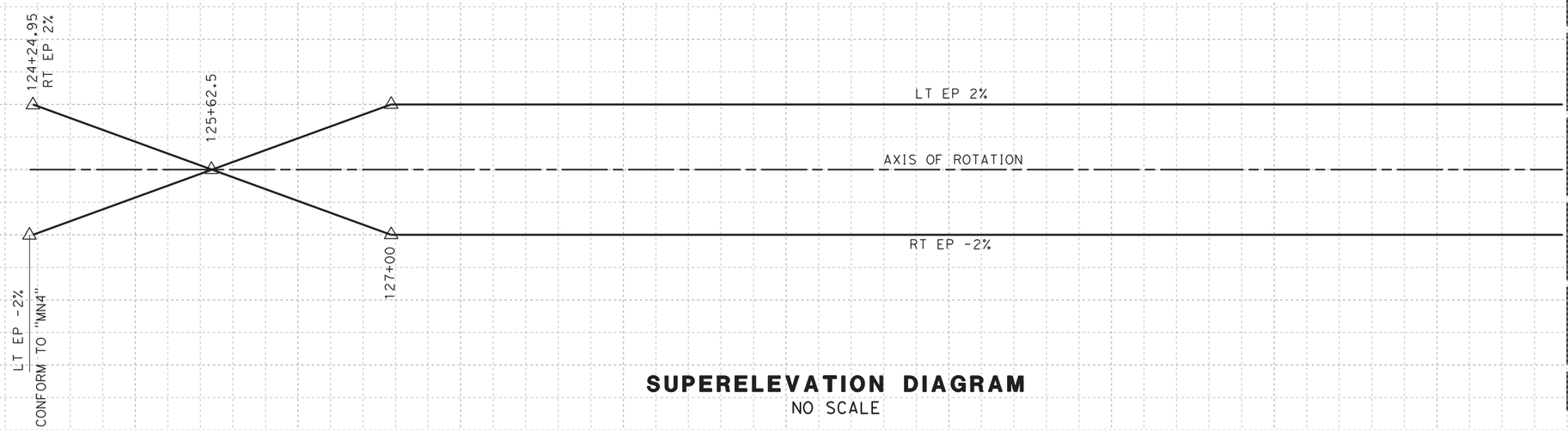

SUPERELEVATION DIAGRAM

NO SCALE

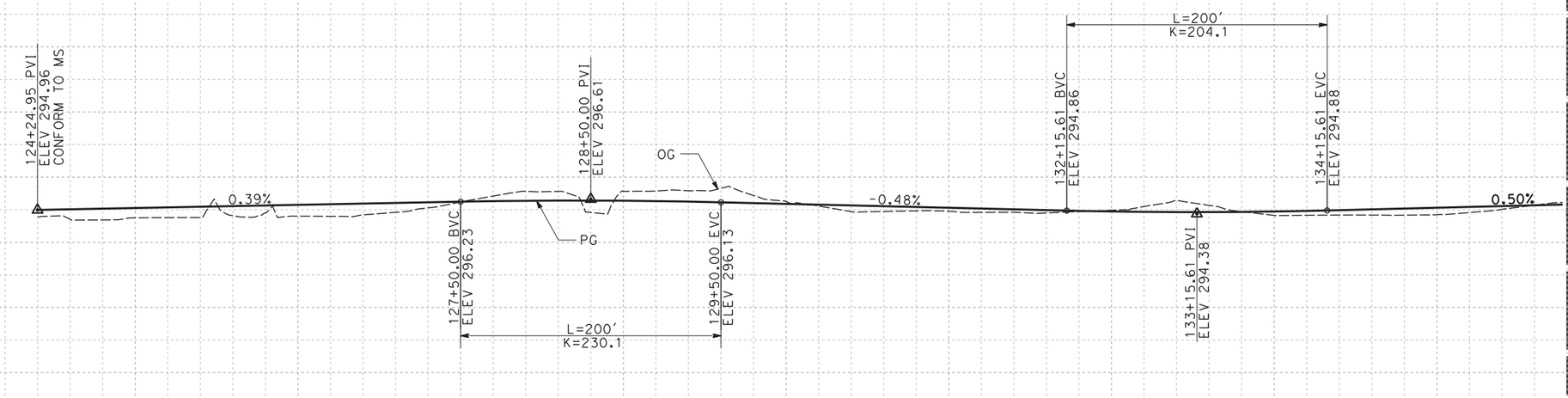

PROFILE

"MN" LINE

10 0 10 20
1"=10' VERT
SCALE APPLICABLE FOR FULL SIZE ONLY

50 0 50 100
1"=50' HORIZ
SCALE APPLICABLE FOR FULL SIZE ONLY

REV	DATE	BY	CHK	APP	DESCRIPTION

DESIGNED BY G. MANOREK
DRAWN BY B. CHAN
CHECKED BY L. HEUSTON
IN CHARGE F. NOBARI
DATE 11/22/11

PROPOSED PRELIMINARY DESIGN

NOT FOR CONSTRUCTION

AECOM Technical Services, Inc.
2020 L Street, Suite 300
Sacramento, CA 95811
CH2MHILL

CALIFORNIA HIGH-SPEED RAIL AUTHORITY

CALIFORNIA HIGH-SPEED TRAIN PROJECT
SIERRA SUBDIVISION

PACKAGE 1A
ROADWAY
PROFILE AND SUPERELEVATION
SR 99 - RAMP "MN"

CONTRACT NO.
DRAWING NO. CV-R1120-R99
SCALE AS SHOWN
SHEET NO.

ychiu 11/16/2011 3:21:14 PM CAHSRP-R1.TBL CHSR_half_black.plt C:\Documents and Settings\ychiu\My Documents\NDMProj\356751 - California High Speed Rail - SR99 Improvements\MF-CV-R1120-R99.dgn

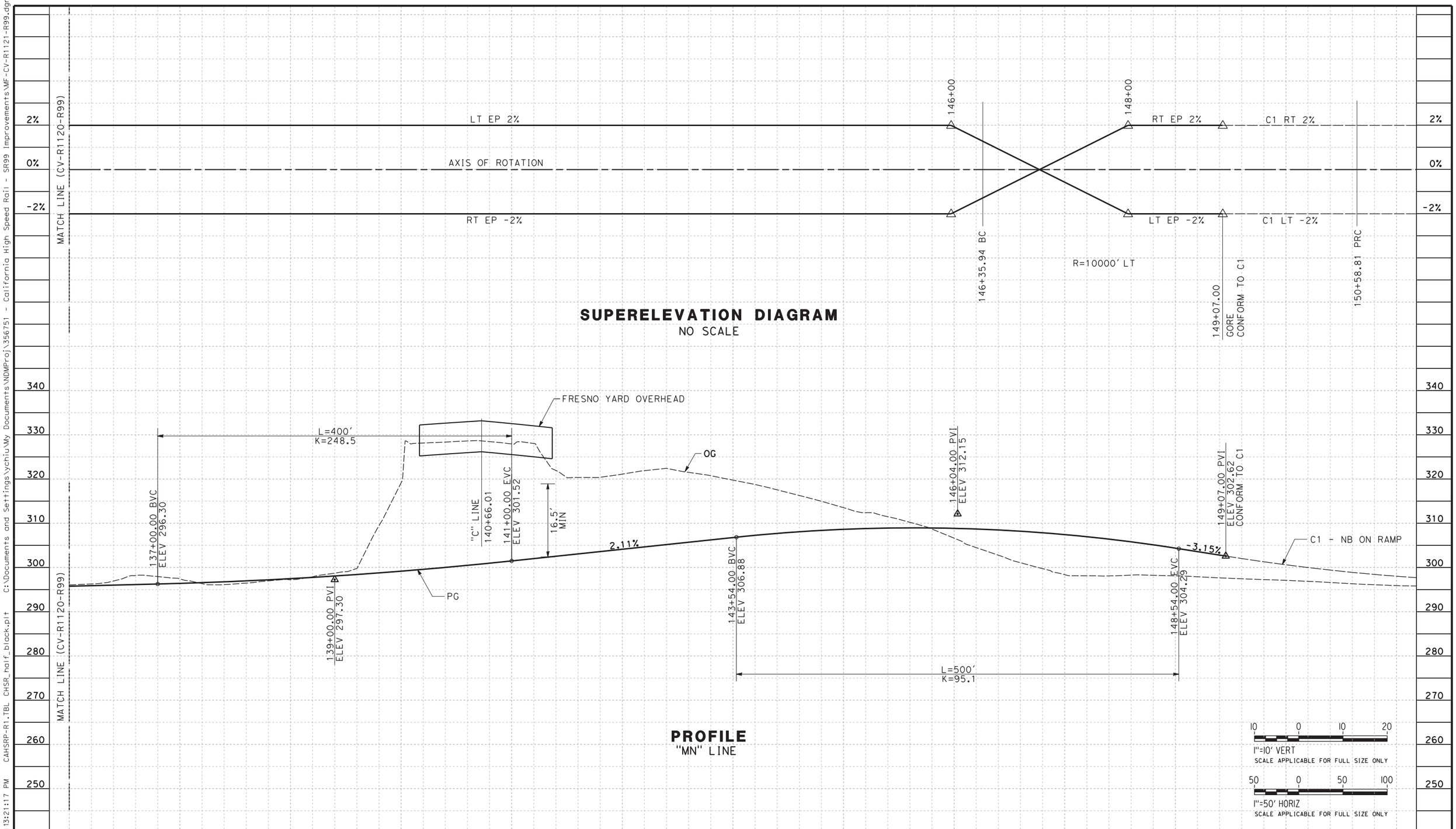

REV	DATE	BY	CHK	APP	DESCRIPTION

DESIGNED BY G. MANOREK
DRAWN BY B. CHAN
CHECKED BY L. HEUSTON
IN CHARGE F. NOBARI
DATE 11/22/11

PROPOSED PRELIMINARY DESIGN

NOT FOR CONSTRUCTION

AECOM Technical Services, Inc.
2020 L Street, Suite 300
Sacramento, CA 95811

CH2MHILL

CALIFORNIA HIGH-SPEED RAIL AUTHORITY

CALIFORNIA HIGH-SPEED TRAIN PROJECT
SIERRA SUBDIVISION
PACKAGE 1A
ROADWAY
PROFILE AND SUPERELEVATION
SR 99 - RAMP "MN"

CONTRACT NO.
DRAWING NO. CV-R1121-R99
SCALE AS SHOWN
SHEET NO.

ychiu 11/16/2011 3:21:17 PM CAHSRP-R1.TBL CHSR_half_black.plt C:\Documents and Settings\ychiu\My Documents\NDMProj\356751 - California High Speed Rail - SR99 Improvements\MF-CV-R1121-R99.dgn

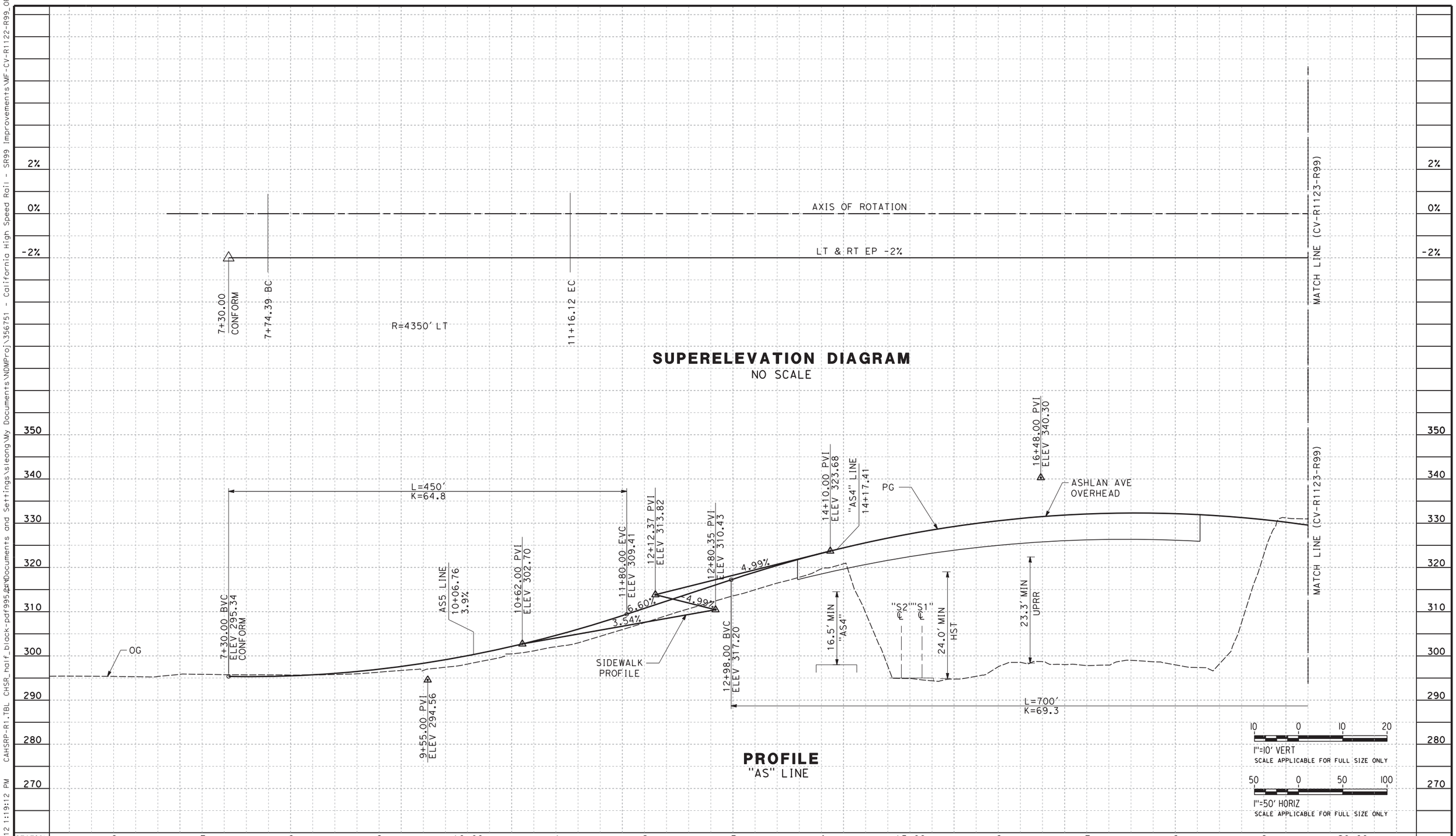

REV	DATE	BY	CHK	APP	DESCRIPTION

DESIGNED BY G. MANOREK
DRAWN BY B. CHAN
CHECKED BY L. HEUSTON
IN CHARGE F. NOBARI
DATE 2/17/12

PROPOSED PRELIMINARY DESIGN

NOT FOR CONSTRUCTION

AECOM Technical Services, Inc.
2020 L Street, Suite 300
Sacramento, CA 95811
CH2MHILL

CALIFORNIA HIGH-SPEED RAIL AUTHORITY

CALIFORNIA HIGH-SPEED TRAIN PROJECT
SIERRA SUBDIVISION
PACKAGE 1A
ROADWAY
PROFILE AND SUPERELEVATION
SR 99 - ASHLAN AVE "AS"

CONTRACT NO.
DRAWING NO. CV-R1122-R99
SCALE AS SHOWN
SHEET NO.

2/16/2012 1:19:12 PM CAHSRP-R1.TBL CHSR_half_black-pdf995.pc3 C:\Documents and Settings\sleong\My Documents\NDMProj\356751 - California High Speed Rail - SR99 Improvements\MF-CV-R1122-R99_OPTIO
sleong

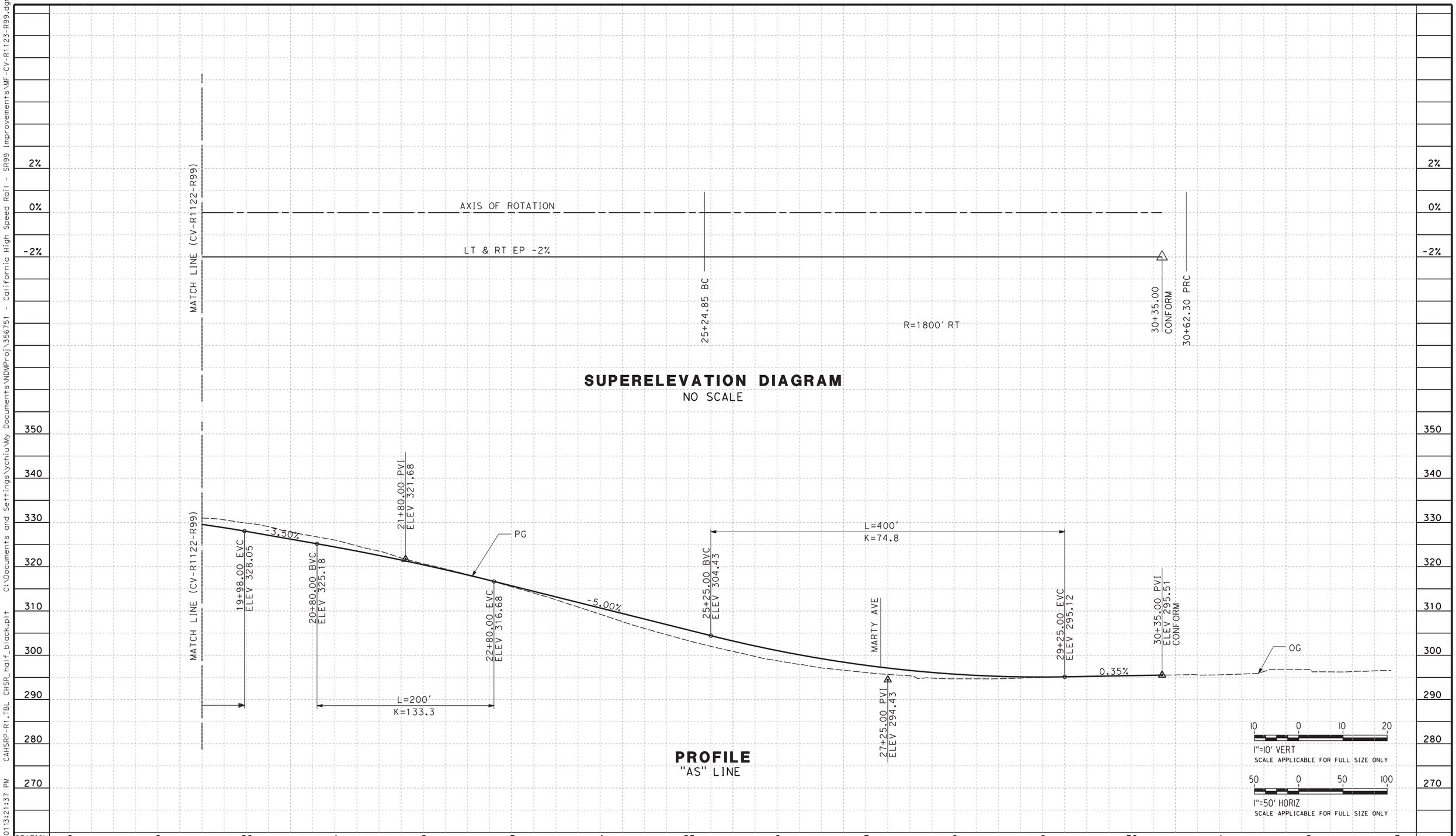

SUPERELEVATION DIAGRAM
NO SCALE

PROFILE
"AS" LINE

REV	DATE	BY	CHK	APP	DESCRIPTION

DESIGNED BY G. MANOREK
DRAWN BY B. CHAN
CHECKED BY L. HEUSTON
IN CHARGE F. NOBARI
DATE 11/22/11

PROPOSED PRELIMINARY DESIGN

NOT FOR CONSTRUCTION

AECOM Technical Services, Inc.
2020 L Street, Suite 300
Sacramento, CA 95811
CH2MHILL

CALIFORNIA HIGH-SPEED RAIL AUTHORITY

CALIFORNIA HIGH-SPEED TRAIN PROJECT
SIERRA SUBDIVISION
PACKAGE 1A
ROADWAY
PROFILE AND SUPERELEVATION
SR 99 - ASHLAN AVE "AS"

CONTRACT NO.
DRAWING NO. CV-R1123-R99
SCALE AS SHOWN
SHEET NO.

ychiu 11/16/2011 3:21:37 PM CAHSRP-R1.TBL CHSR_half_black.plt C:\Documents and Settings\ychiu\My Documents\NDMProj\356751 - California High Speed Rail - SR99 Improvements\MF-CV-R1123-R99.dgn

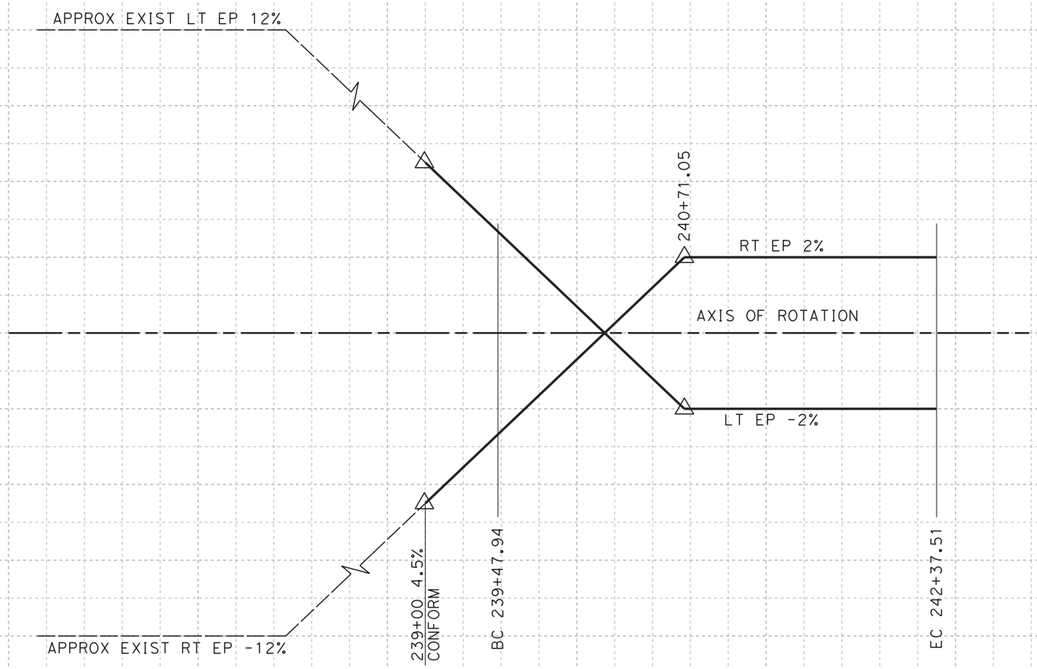

SUPERELEVATION DIAGRAM
NO SCALE

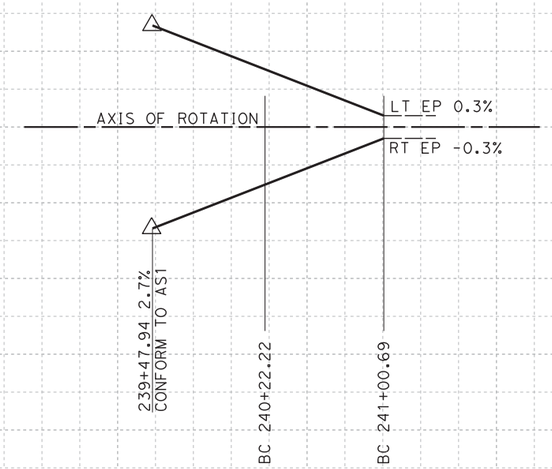

SUPERELEVATION DIAGRAM
NO SCALE

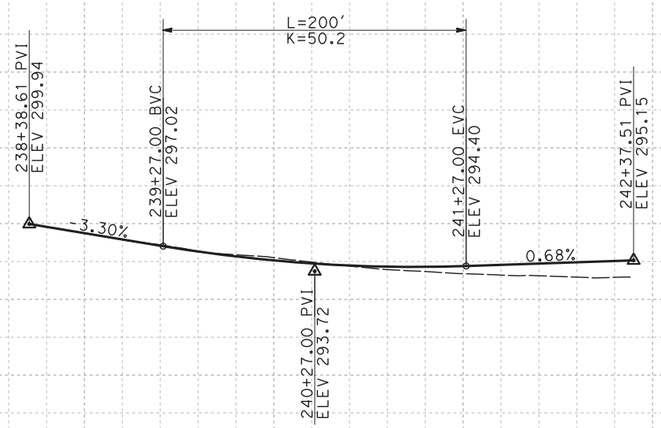

PROFILE
"AS1" LINE

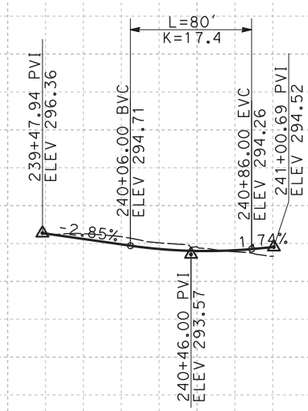

PROFILE
"AS2" LINE

10 0 10 20
1"=10' VERT
SCALE APPLICABLE FOR FULL SIZE ONLY

50 0 50 100
1"=100' HORIZ
SCALE APPLICABLE FOR FULL SIZE ONLY

STATION 7 8 9 240+00 1 2 3 8 9 240+00 1 2

REV	DATE	BY	CHK	APP	DESCRIPTION

DESIGNED BY G. MANOREK
DRAWN BY B. CHAN
CHECKED BY J. MATSUI-DRURY
IN CHARGE F. NOBARI
DATE 11/22/11

PROPOSED PRELIMINARY DESIGN

NOT FOR CONSTRUCTION

AECOM Technical Services, Inc.
2020 L Street, Suite 300
Sacramento, CA 95811
CH2MHILL

CALIFORNIA HIGH-SPEED RAIL AUTHORITY

CALIFORNIA HIGH-SPEED TRAIN PROJECT
SIERRA SUBDIVISION
PACKAGE 1A
ROADWAY
PROFILE AND SUPERELEVATION
SR 99 - RAMP "AS1", "AS2"

CONTRACT NO.
DRAWING NO. CV-R1124-R99
SCALE AS SHOWN
SHEET NO.

ychiu 11/16/2013 1:21:40 PM CAHSRP-R1.TBL CHSR_half_black.plt C:\Documents and Settings\ychiu\My Documents\NDMProj\356751 - California High Speed Rail - SR99 Improvements\MF-CV-R1124-R99.dgn

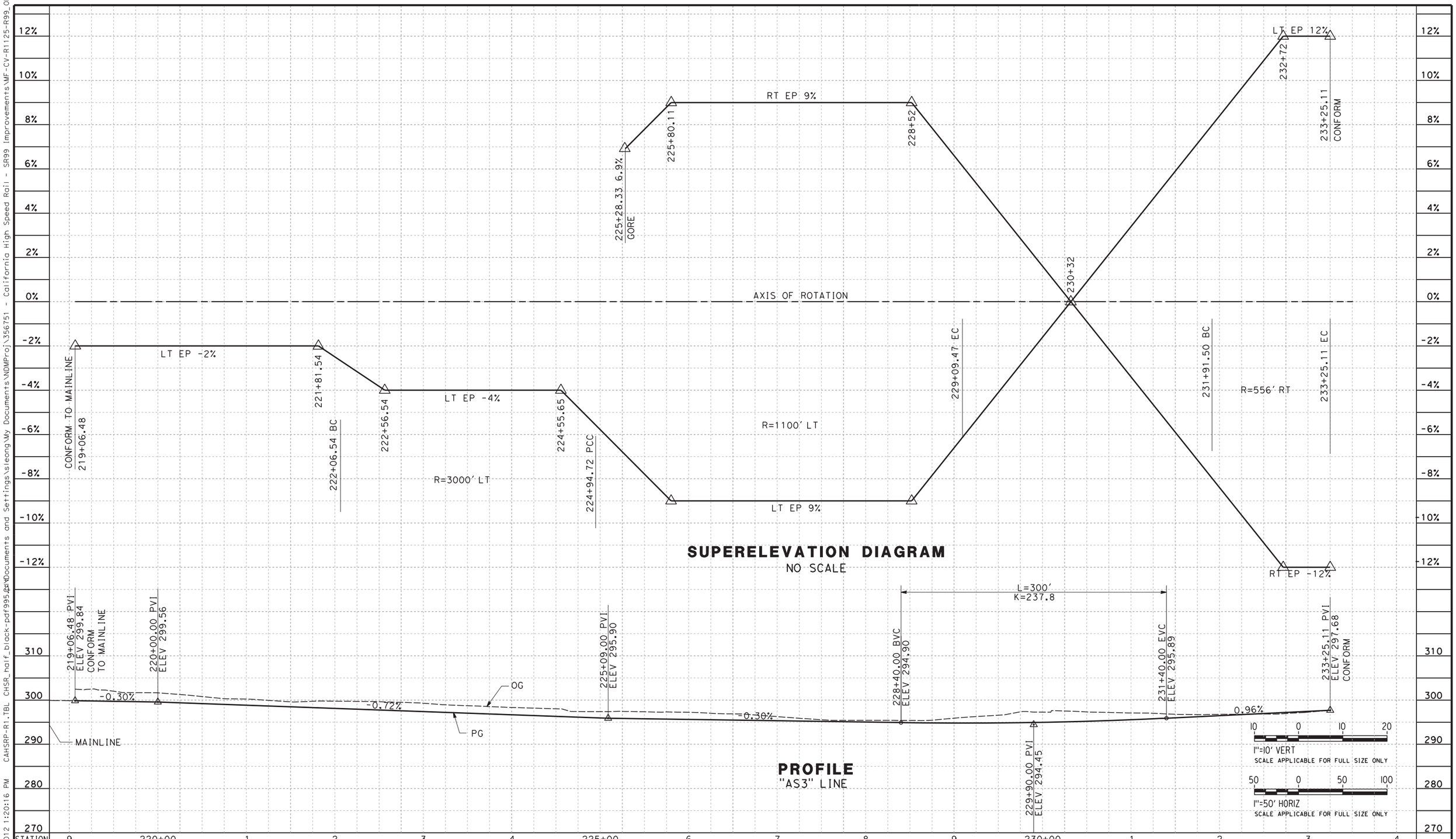

REV	DATE	BY	CHK	APP	DESCRIPTION

DESIGNED BY G. MANOREK
DRAWN BY B. CHAN
CHECKED BY L. HEUSTON
IN CHARGE F. NOBARI
DATE 2/17/12

PROPOSED PRELIMINARY DESIGN

NOT FOR CONSTRUCTION

AECOM Technical Services, Inc.
2020 L Street, Suite 300
Sacramento, CA 95811
CH2MHILL

CALIFORNIA HIGH-SPEED RAIL AUTHORITY

CALIFORNIA HIGH-SPEED TRAIN PROJECT
SIERRA SUBDIVISION
PACKAGE 1A
ROADWAY
PROFILE AND SUPERELEVATION
SR 99 - RAMP "AS3"

CONTRACT NO.
DRAWING NO. CV-R1125-R99
SCALE AS SHOWN
SHEET NO.

2/16/2012 1:20:16 PM CAHSRP-R1.TBL CHSR_half_black-pdf995.pc3 C:\Documents and Settings\sleong\My Documents\NDMProj\356751 - California High Speed Rail - SR99 Improvements\WF-CV-R1125-R99_OPTIO
sleong

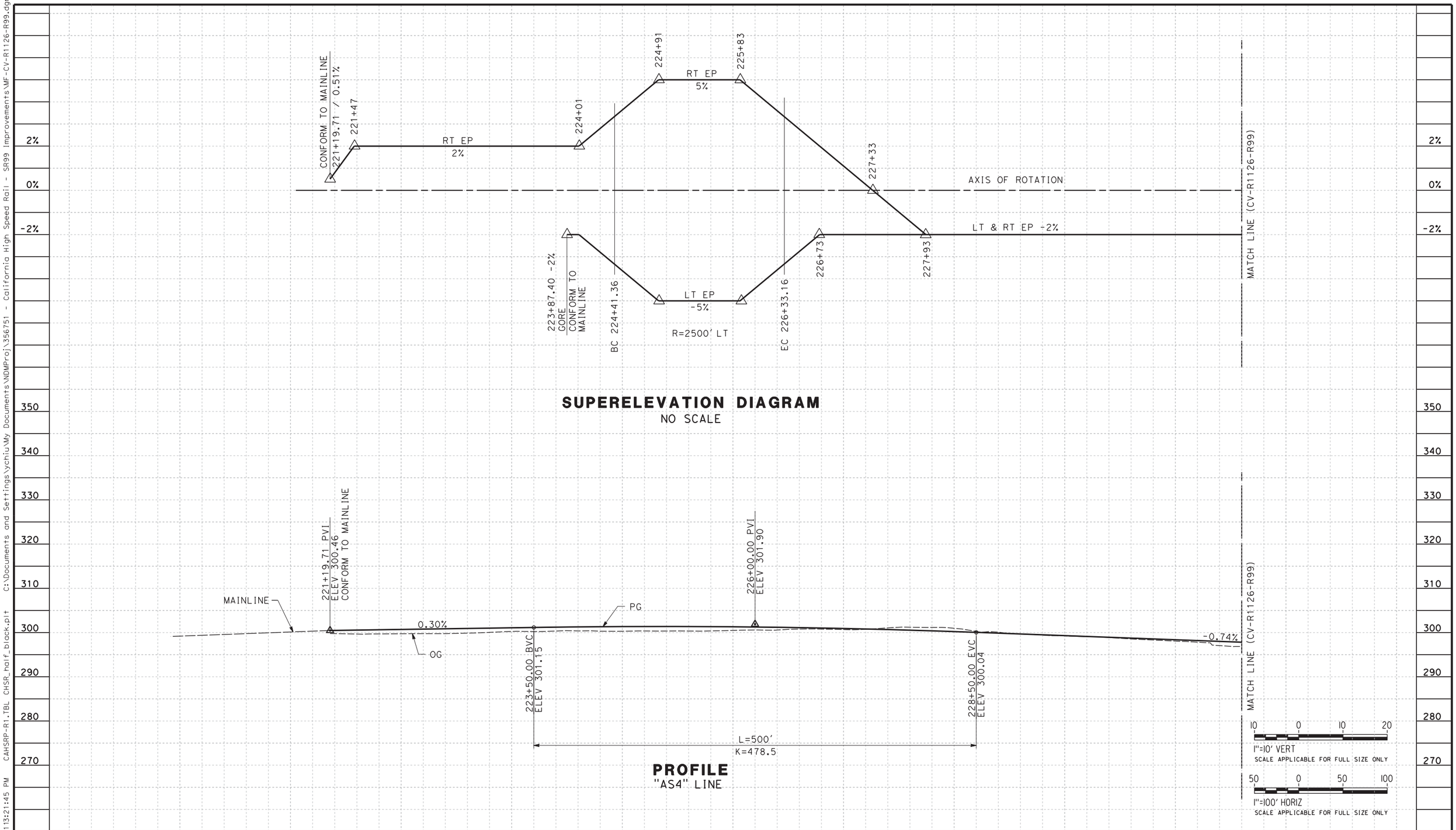

SUPERELEVATION DIAGRAM
NO SCALE

PROFILE
"AS4" LINE

REV	DATE	BY	CHK	APP	DESCRIPTION

DESIGNED BY G. MANOREK
DRAWN BY B. CHAN
CHECKED BY L. HEUSTON
IN CHARGE F. NOBARI
DATE 11/22/11

PROPOSED PRELIMINARY DESIGN

NOT FOR CONSTRUCTION

AECOM Technical Services, Inc.
2020 L Street, Suite 300
Sacramento, CA 95811
CH2MHILL

CALIFORNIA HIGH-SPEED RAIL AUTHORITY

CALIFORNIA HIGH-SPEED TRAIN PROJECT
SIERRA SUBDIVISION
PACKAGE 1A
ROADWAY
PROFILE AND SUPERELEVATION
SR 99 -RAMP "AS4"

CONTRACT NO.
DRAWING NO. CV-R1126-R99
SCALE AS SHOWN
SHEET NO.

11/16/2011 3:21:45 PM CAHSRP-R1.TBL CHSR_half_black.plt C:\Documents and Settings\ychiu\My Documents\NDMProj\356751 - California High Speed Rail - SR99 Improvements\MF-CV-R1126-R99.dgn
ychiu

11/16/2011 3:21:48 PM CAHSRP-R1.TBL CHSR_half_black.plt C:\Documents and Settings\ychiu\My Documents\NDMProj\356751 - California High Speed Rail - SR99 Improvements\MF-CV-R1127-R99.dgn
ychiu

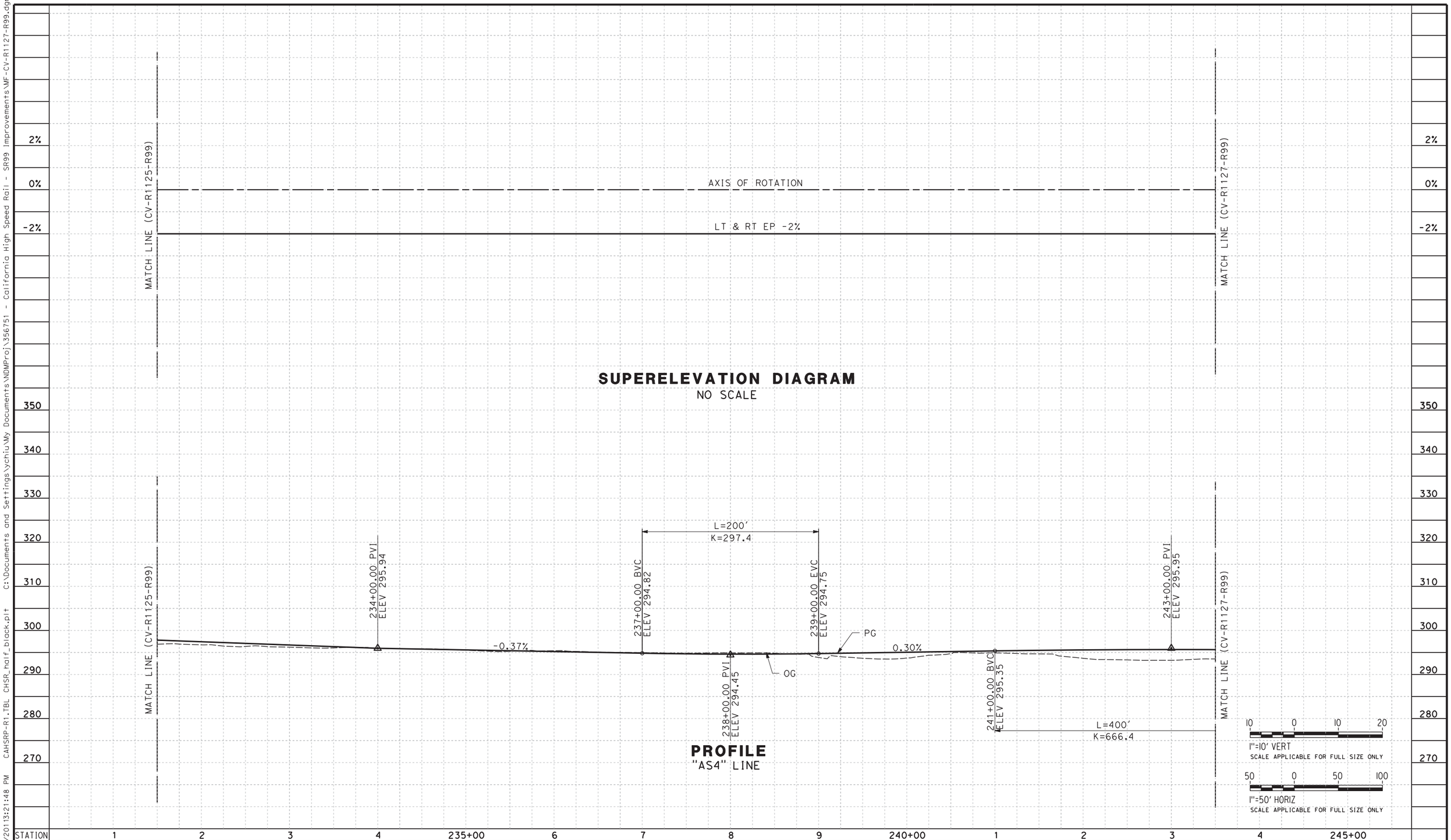

REV	DATE	BY	CHK	APP	DESCRIPTION

DESIGNED BY G. MANOREK
DRAWN BY B. CHAN
CHECKED BY L. HEUSTON
IN CHARGE F. NOBARI
DATE 11/22/11

PROPOSED PRELIMINARY DESIGN

NOT FOR CONSTRUCTION

AECOM Technical Services, Inc.
2020 L Street, Suite 300
Sacramento, CA 95811
CH2MHILL

CALIFORNIA HIGH-SPEED RAIL AUTHORITY

CALIFORNIA HIGH-SPEED TRAIN PROJECT
SIERRA SUBDIVISION
PACKAGE 1A
ROADWAY
PROFILE AND SUPERELEVATION
SR 99 - RAMP "AS4"

CONTRACT NO.
DRAWING NO. CV-R1127-R99
SCALE AS SHOWN
SHEET NO.

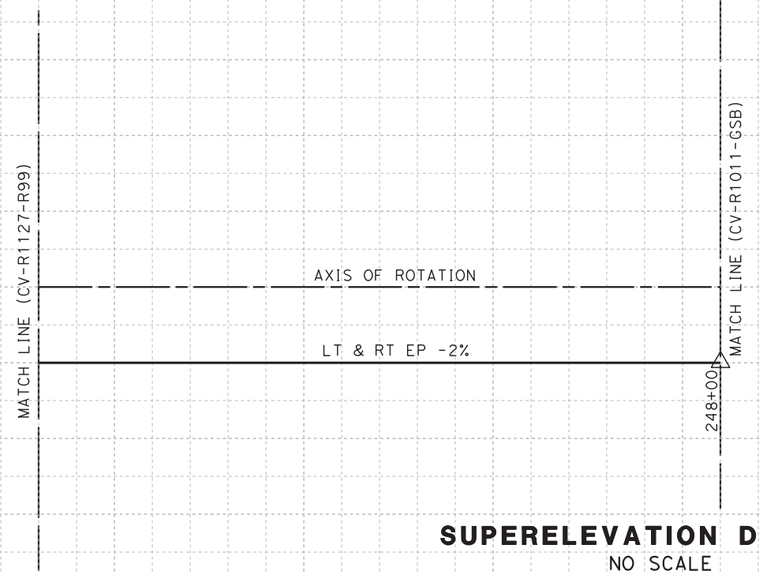

SUPERELEVATION DIAGRAM

NO SCALE

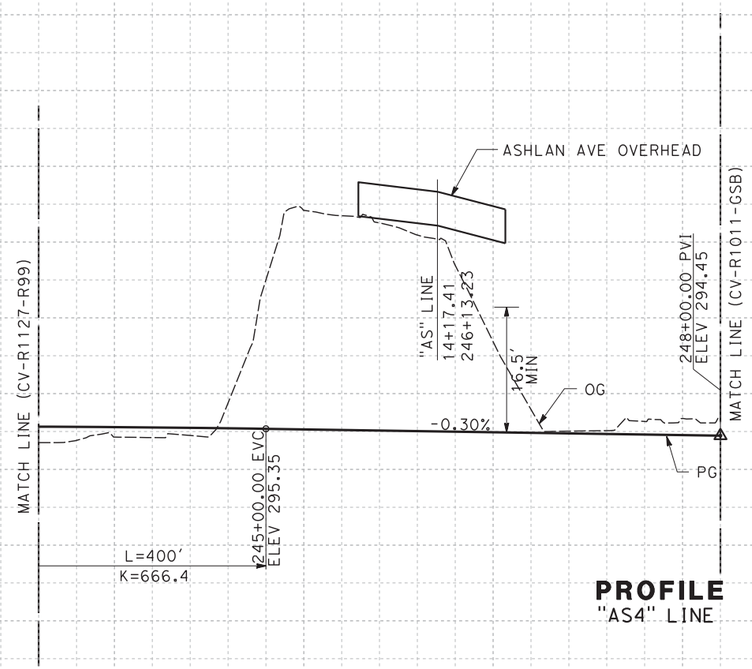

PROFILE

"AS4" LINE

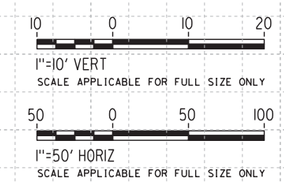

STATION 2 3 4 245+00 6 7 8 9 250+00 1 2 3 4 255+00

REV	DATE	BY	CHK	APP	DESCRIPTION

DESIGNED BY G. MANOREK
DRAWN BY B. CHAN
CHECKED BY L. HEUSTON
IN CHARGE F. NOBARI
DATE 11/22/11

PROPOSED PRELIMINARY DESIGN

NOT FOR CONSTRUCTION

AECOM Technical Services, Inc.
2020 L Street, Suite 300
Sacramento, CA 95811

CH2MHILL

CALIFORNIA HIGH-SPEED RAIL AUTHORITY

CALIFORNIA HIGH-SPEED TRAIN PROJECT
SIERRA SUBDIVISION
PACKAGE 1A
ROADWAY
PROFILE AND SUPERELEVATION
SR 99 - RAMP "AS4"

CONTRACT NO.
DRAWING NO. CV-R1128-R99
SCALE AS SHOWN
SHEET NO.

11/16/2011 3:21:51 PM CAHSRP-R1.TBL CHSR_half_black.plt C:\Documents and Settings\ychiu\My Documents\NDMProj\356751 - California High Speed Rail - SR99 Improvements\MF-CV-R1128-R99.dgn
ychiu

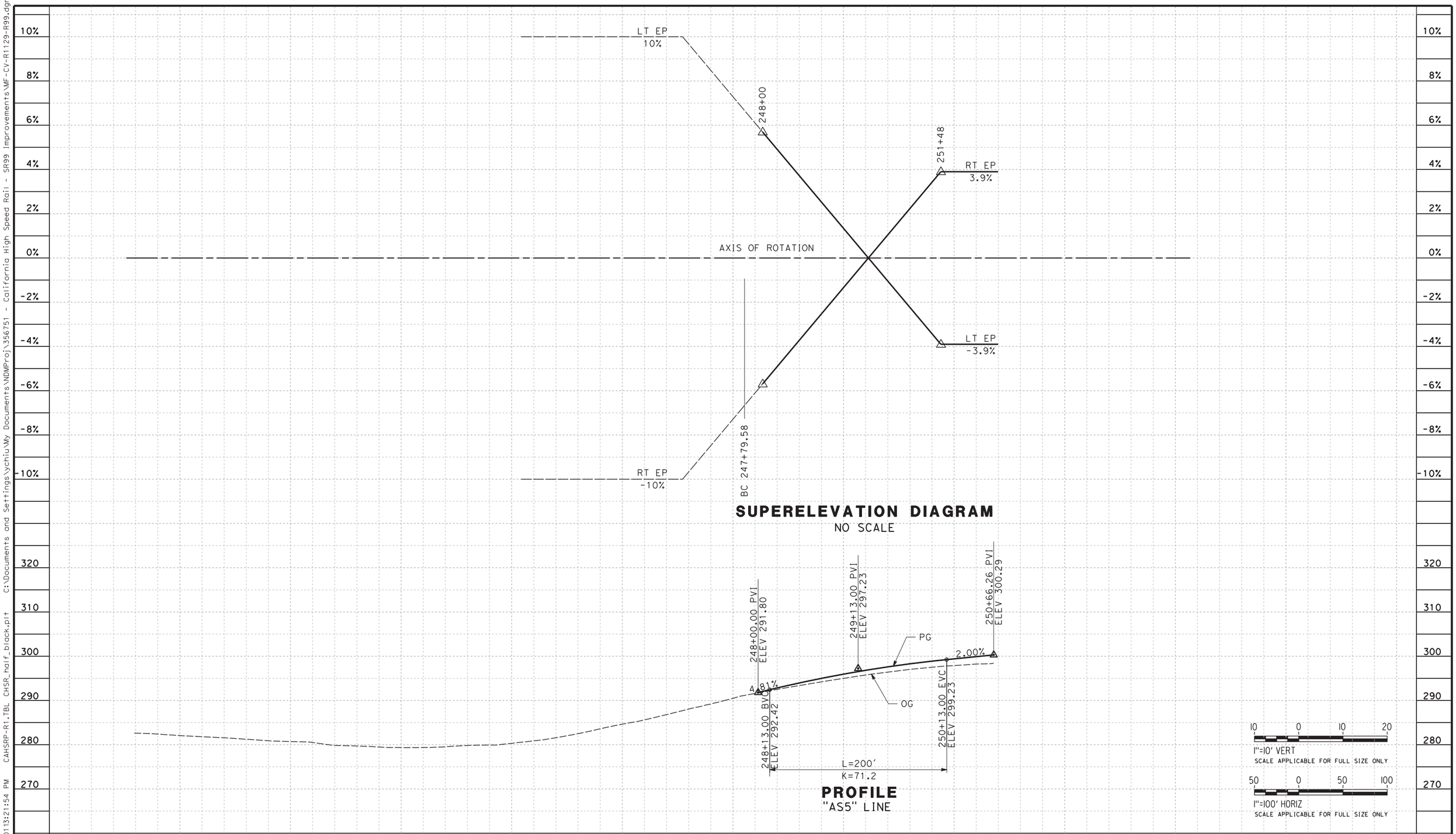

REV	DATE	BY	CHK	APP	DESCRIPTION

DESIGNED BY G. MANOREK
DRAWN BY B. CHAN
CHECKED BY J. MATSUI-DRURY
IN CHARGE F. NOBARI
DATE 11/22/11

PROPOSED PRELIMINARY DESIGN

NOT FOR CONSTRUCTION

AECOM Technical Services, Inc.
2020 L Street, Suite 300
Sacramento, CA 95811

CH2MHILL

CALIFORNIA HIGH-SPEED RAIL AUTHORITY

CALIFORNIA HIGH-SPEED TRAIN PROJECT
SIERRA SUBDIVISION
PACKAGE 1A
ROADWAY
PROFILE AND SUPERELEVATION
SR 99 - RAMP "AS5"

CONTRACT NO.
DRAWING NO. CV-R1129-R99
SCALE AS SHOWN
SHEET NO.

ychiu 11/16/2011 3:21:54 PM CAHSRP-R1.TBL CHSR_half_black.plt C:\Documents and Settings\ychiu\My Documents\NDMProj\356751 - California High Speed Rail - SR99 Improvements\MF-CV-R1129-R99.dgn

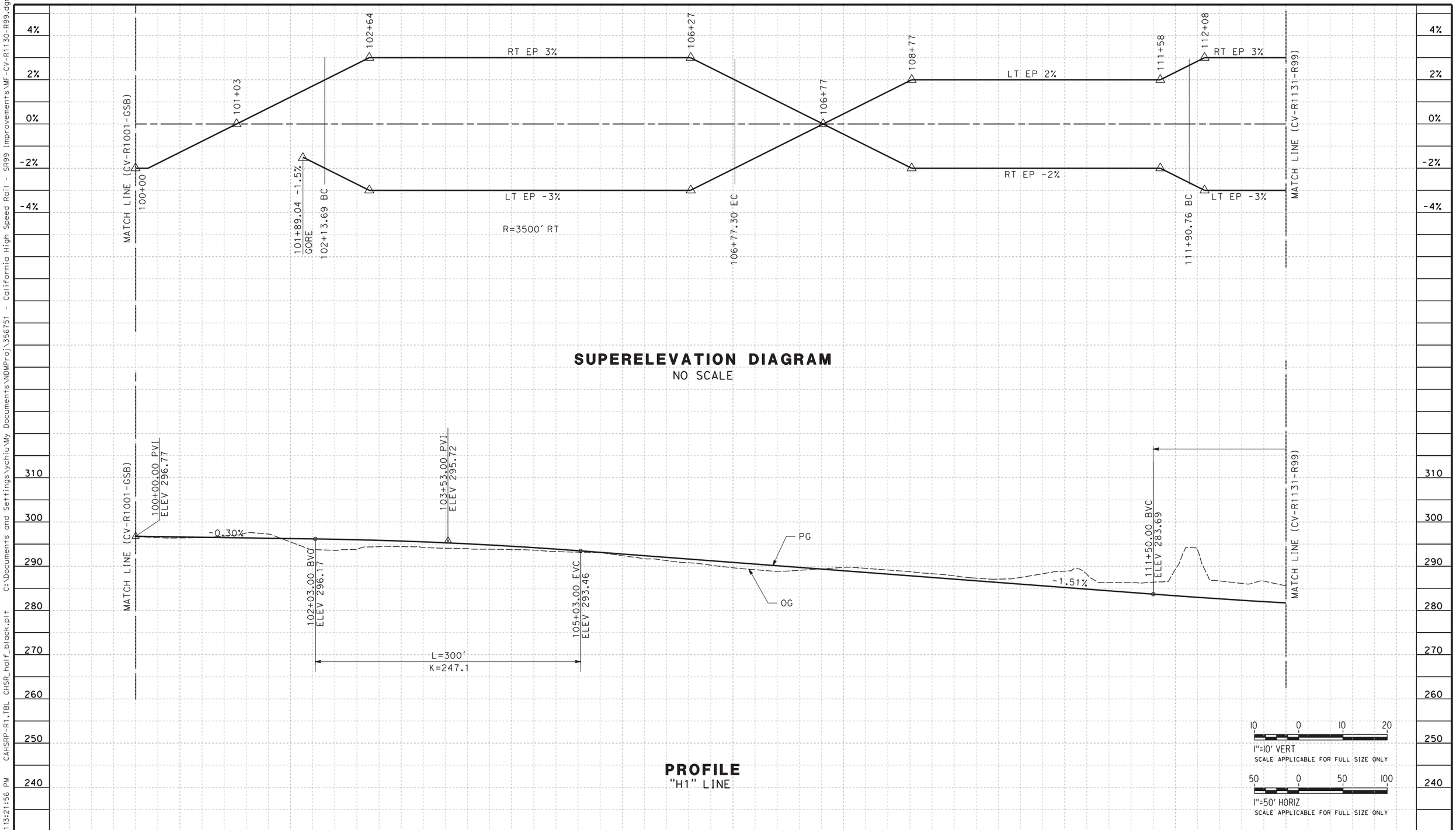

REV	DATE	BY	CHK	APP	DESCRIPTION

DESIGNED BY G. MANOREK
DRAWN BY B. CHAN
CHECKED BY L. HEUSTON
IN CHARGE F. NOBARI
DATE 11/22/11

PROPOSED PRELIMINARY DESIGN

NOT FOR CONSTRUCTION

AECOM Technical Services, Inc.
2020 L Street, Suite 300
Sacramento, CA 95811
CH2MHILL

CALIFORNIA HIGH-SPEED RAIL AUTHORITY

CALIFORNIA HIGH-SPEED TRAIN PROJECT
SIERRA SUBDIVISION
PACKAGE 1A
ROADWAY
PROFILE AND SUPERELEVATION
SR 99 - RAMP "H1"

CONTRACT NO.
DRAWING NO. CV-R1130-R99
SCALE AS SHOWN
SHEET NO.

ychiu 11/16/2011 3:21:56 PM CAHSRP-R1.TBL CHSR_half_black.plt C:\Documents and Settings\ychiu\My Documents\NDMProj\356751 - California High Speed Rail - SR99 Improvements\MF-CV-R1130-R99.dgn

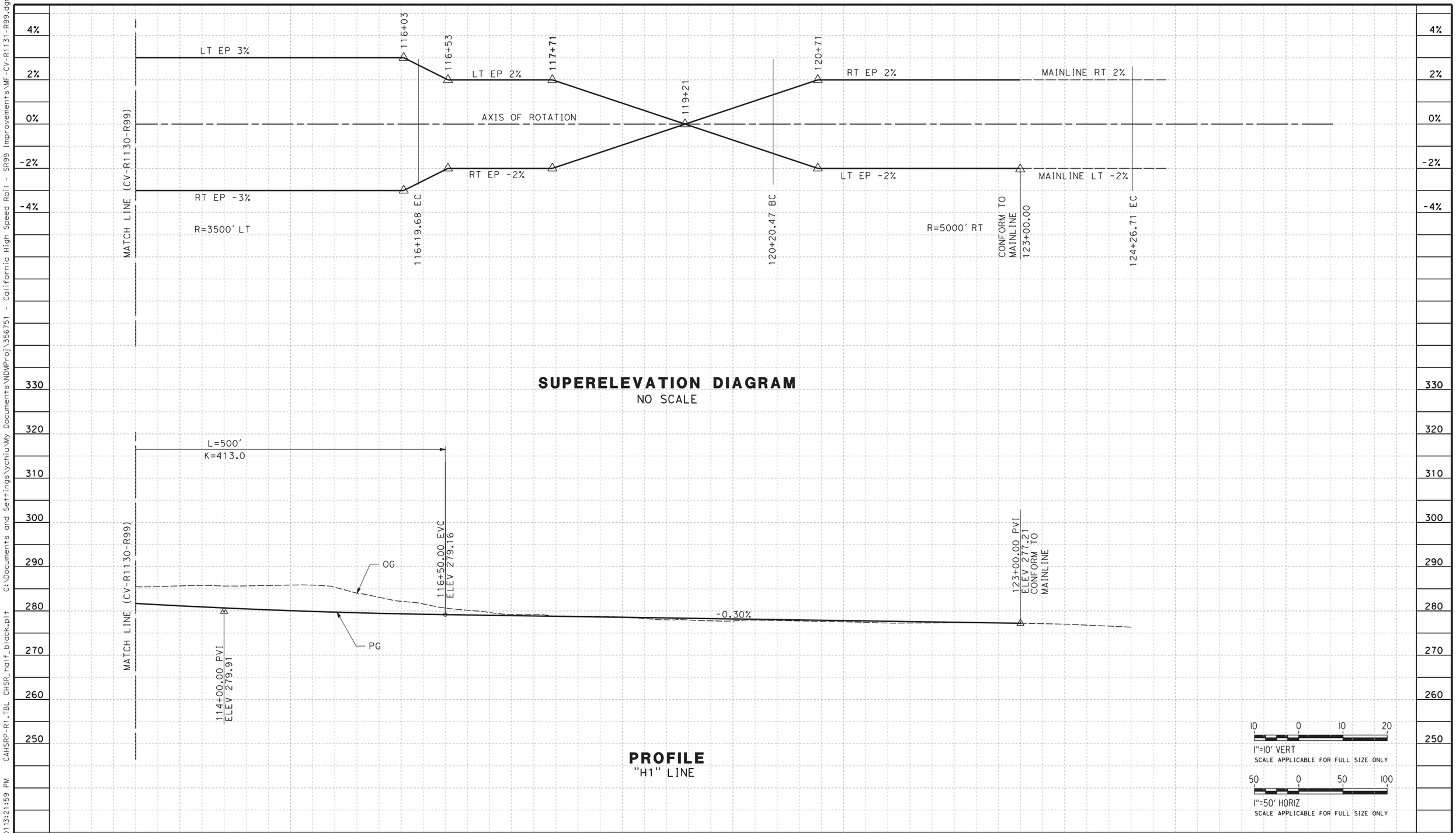

REV	DATE	BY	CHK	APP	DESCRIPTION

DESIGNED BY G. MANOREK
DRAWN BY B. CHAN
CHECKED BY L. HEUSTON
IN CHARGE F. NOBARI
DATE 11/22/11

PROPOSED PRELIMINARY DESIGN

NOT FOR CONSTRUCTION

AECOM Technical Services, Inc.
2020 L Street, Suite 300
Sacramento, CA 95811

CH2MHILL

CALIFORNIA HIGH-SPEED RAIL AUTHORITY

CALIFORNIA HIGH-SPEED TRAIN PROJECT
SIERRA SUBDIVISION
PACKAGE 1A
ROADWAY
PROFILE AND SUPERELEVATION
SR 99 - RAMP "H1"

CONTRACT NO.
DRAWING NO. CV-R1131-R99
SCALE AS SHOWN
SHEET NO.

ychiu 11/16/2013 1:21:59 PM CAHSRP-R1.TBL CHSR_half_black.plt C:\Documents and Settings\ychiu\My Documents\NDMProj\356751 - California High Speed Rail - SR99 Improvements\MF-CV-R1131-R99.dgn

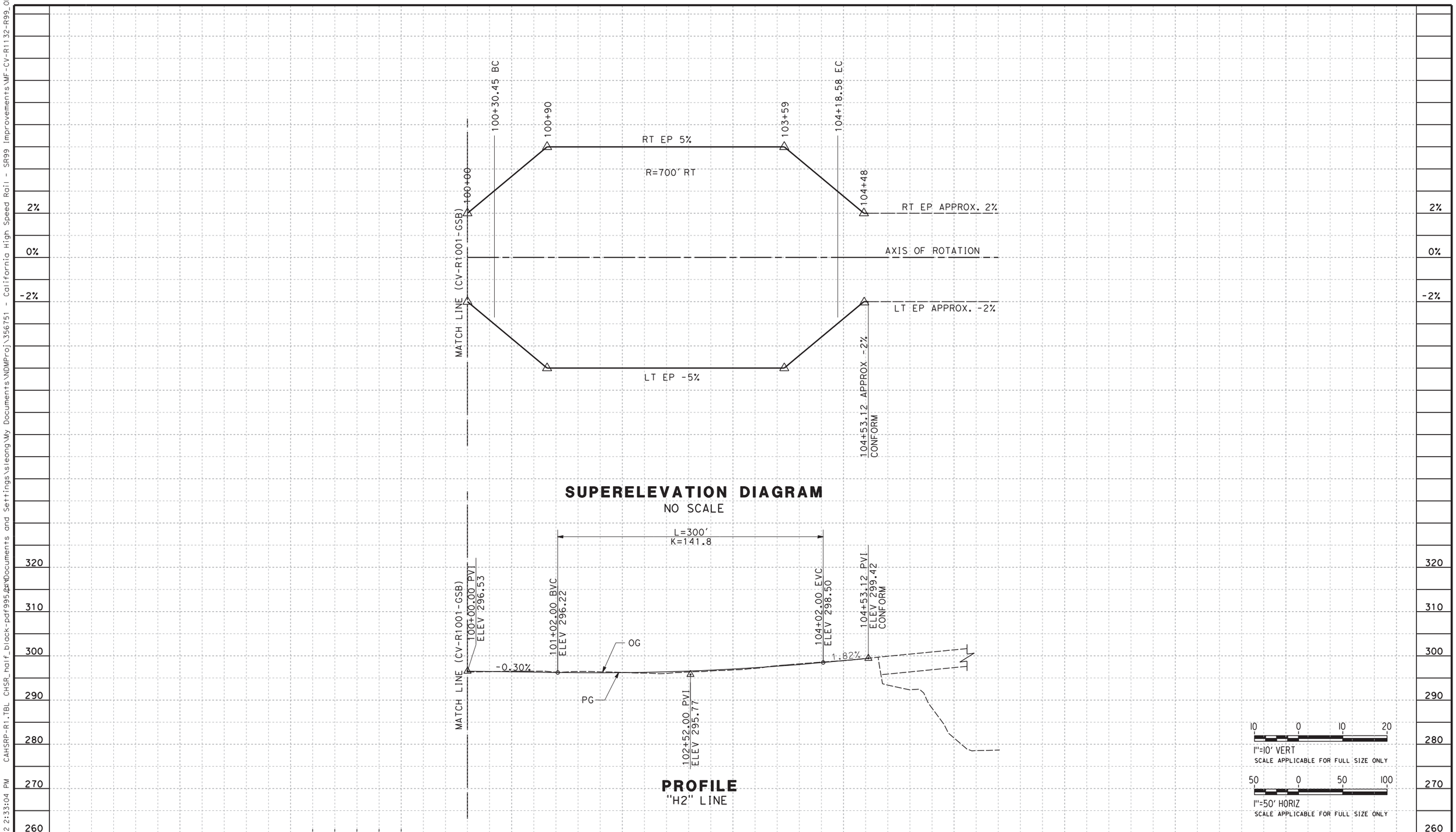

REV	DATE	BY	CHK	APP	DESCRIPTION

DESIGNED BY G. MANOREK
DRAWN BY B. CHAN
CHECKED BY L. HEUSTON
IN CHARGE F. NOBARI
DATE 2/17/12

PROPOSED PRELIMINARY DESIGN

NOT FOR CONSTRUCTION

AECOM Technical Services, Inc.
2020 L Street, Suite 300
Sacramento, CA 95811

CH2MHILL

CALIFORNIA HIGH-SPEED RAIL AUTHORITY

CALIFORNIA HIGH-SPEED TRAIN PROJECT
SIERRA SUBDIVISION
PACKAGE 1A
ROADWAY
PROFILE AND SUPERELEVATION
SR 99 - RAMP "H2"

CONTRACT NO.
DRAWING NO. CV-R1132-R99
SCALE AS SHOWN
SHEET NO.

2/13/2012 2:33:04 PM CAHSRP-R1.TBL CHSR_half_black-pdf995.pc3 C:\Documents and Settings\sleong\My Documents\NDMProj\356751 - California High Speed Rail - SR99 Improvements\MF-CV-R1132-R99_OPTIO
sleong

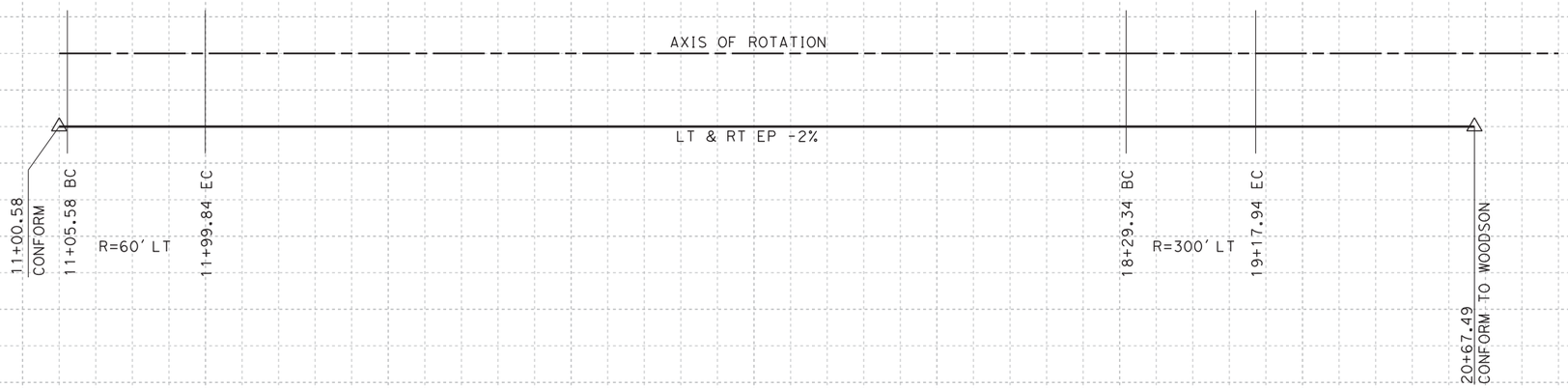

SUPERELEVATION DIAGRAM

NO SCALE

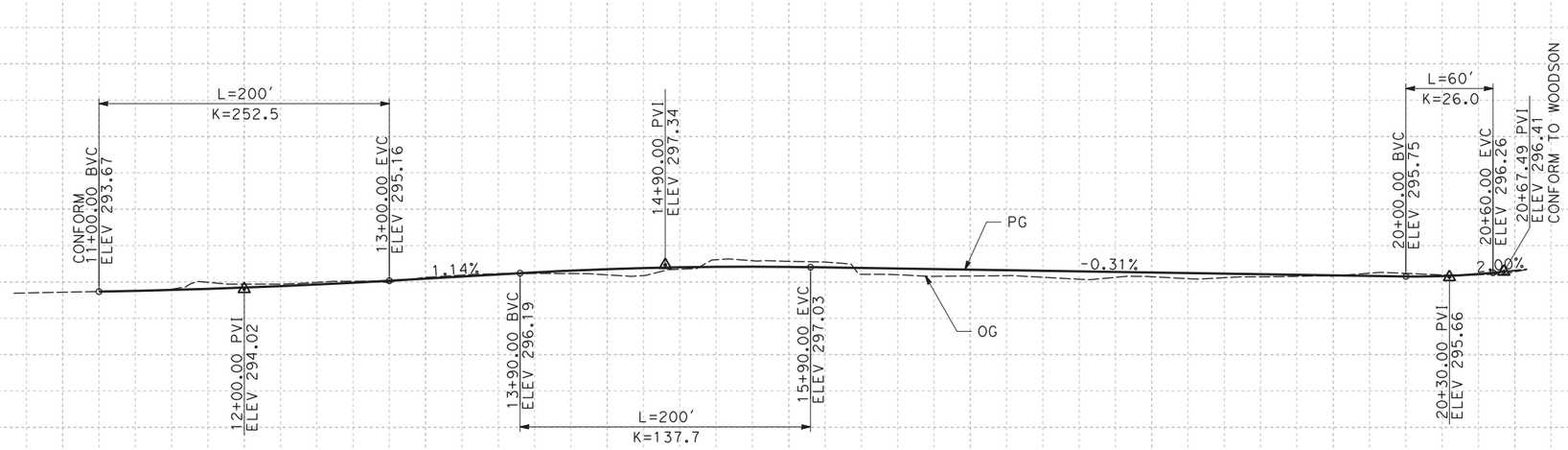

PROFILE

"P" LINE

10 0 10 20
1"=10' VERT
SCALE APPLICABLE FOR FULL SIZE ONLY

50 0 50 100
1"=50' HORIZ
SCALE APPLICABLE FOR FULL SIZE ONLY

REV	DATE	BY	CHK	APP	DESCRIPTION

DESIGNED BY G. MANOREK
DRAWN BY B. CHAN
CHECKED BY L. HEUSTON
IN CHARGE F. NOBARI
DATE 11/22/11

PROPOSED PRELIMINARY DESIGN

NOT FOR CONSTRUCTION

AECOM Technical Services, Inc.
2020 L Street, Suite 300
Sacramento, CA 95811
CH2MHILL

CALIFORNIA HIGH-SPEED RAIL AUTHORITY

CALIFORNIA HIGH-SPEED TRAIN PROJECT
SIERRA SUBDIVISION
PACKAGE 1A
ROADWAY
PROFILE AND SUPERELEVATION
SR 99 - PLEASANT AVE "P"

CONTRACT NO.
DRAWING NO. CV-R1133-R99
SCALE AS SHOWN
SHEET NO.

ychiu 11/16/2011 3:22:12 PM CAHSRP-R1.TBL CHSR_half_black.plt C:\Documents and Settings\ychiu\My Documents\NDMProj\356751 - California High Speed Rail - SR99 Improvements\MF-CV-R1133-R99.dgn

SUPERELEVATION DIAGRAM
NO SCALE

SUPERELEVATION DIAGRAM
NO SCALE

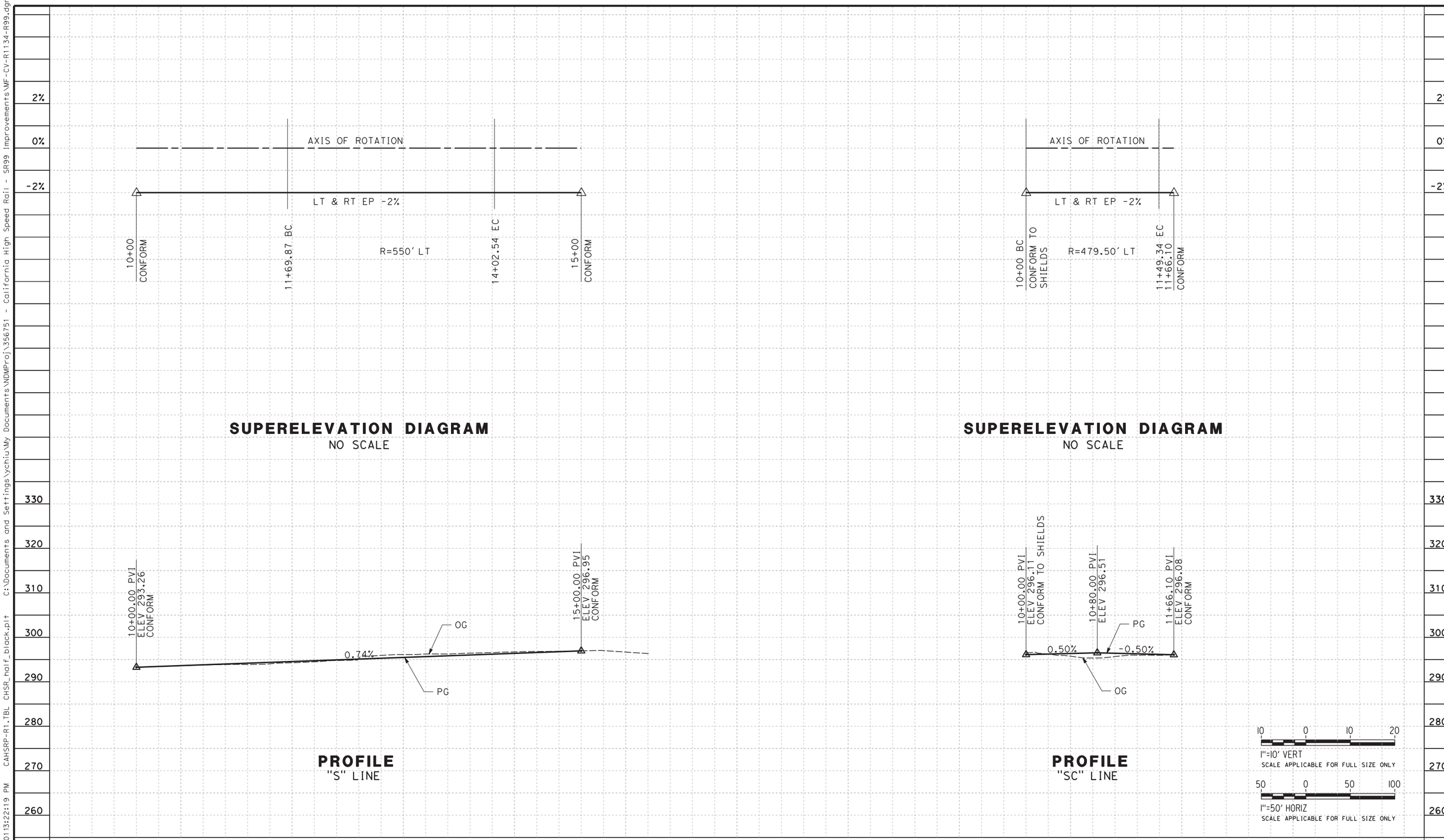

PROFILE
"S" LINE

PROFILE
"SC" LINE

REV	DATE	BY	CHK	APP	DESCRIPTION

DESIGNED BY G. MANOREK
DRAWN BY B. CHAN
CHECKED BY L. HEUSTON
IN CHARGE F. NOBARI
DATE 11/22/11

PROPOSED PRELIMINARY DESIGN

NOT FOR CONSTRUCTION

AECOM Technical Services, Inc.
2020 L Street, Suite 300
Sacramento, CA 95811
CH2MHILL

CALIFORNIA HIGH-SPEED RAIL AUTHORITY

CALIFORNIA HIGH-SPEED TRAIN PROJECT
SIERRA SUBDIVISION
PACKAGE 1A
ROADWAY
PROFILE AND SUPERELEVATION
SR 99 - SHIELDS AVE "S", "SC"

CONTRACT NO.
DRAWING NO. CV-R1134-R99
SCALE AS SHOWN
SHEET NO.

ychiu 11/16/2013 3:22:19 PM CAHSRP-R1.TBL CHSR_half_black.plt C:\Documents and Settings\ychiu\My Documents\NDMProj\356751 - California High Speed Rail - SR99 Improvements\MF-CV-R1134-R99.dgn

ychiu 11/16/2011 3:22:26 PM CAHSRP-R1.TBL CHSR_half_black.plt C:\Documents and Settings\ychiu\My Documents\NDMProj\356751 - California High Speed Rail - SR99 Improvements\MF-CV-R1135-R99.dgn

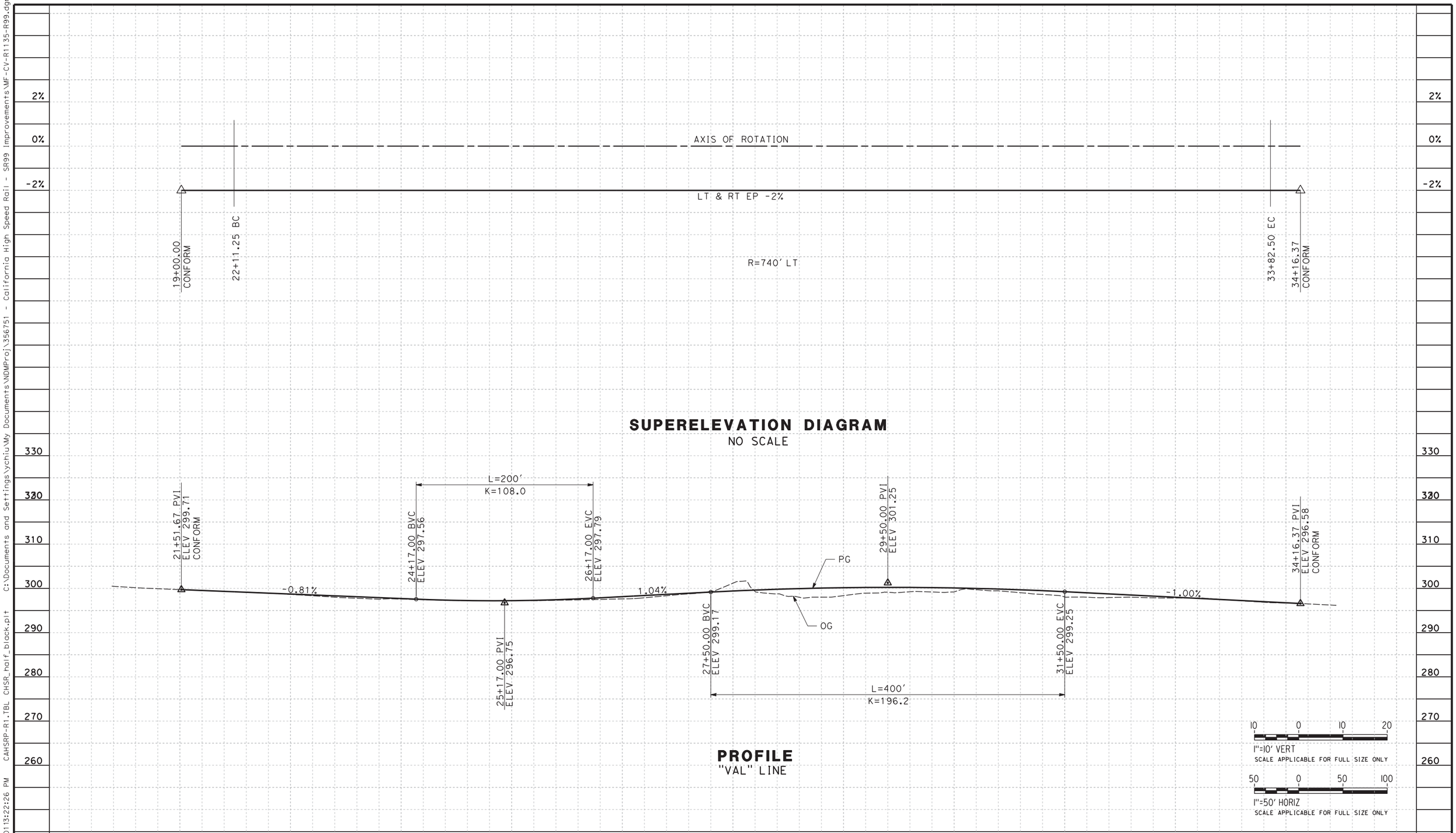

REV	DATE	BY	CHK	APP	DESCRIPTION

DESIGNED BY G. MANOREK
DRAWN BY B. CHAN
CHECKED BY L. HEUSTON
IN CHARGE F. NOBARI
DATE 11/22/11

PROPOSED PRELIMINARY DESIGN

NOT FOR CONSTRUCTION

AECOM Technical Services, Inc.
2020 L Street, Suite 300
Sacramento, CA 95811
CH2MHILL

CALIFORNIA HIGH-SPEED RAIL AUTHORITY

CALIFORNIA HIGH-SPEED TRAIN PROJECT
SIERRA SUBDIVISION
PACKAGE 1A
ROADWAY
PROFILE AND SUPERELEVATION
SR 99 - VALENTINE AVE "VAL"

CONTRACT NO.
DRAWING NO. CV-R1135-R99
SCALE AS SHOWN
SHEET NO.

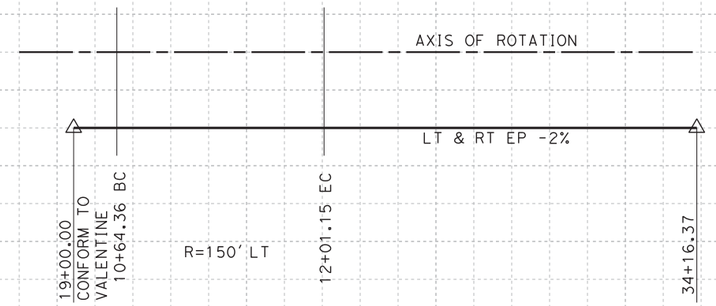

SUPERELEVATION DIAGRAM
NO SCALE

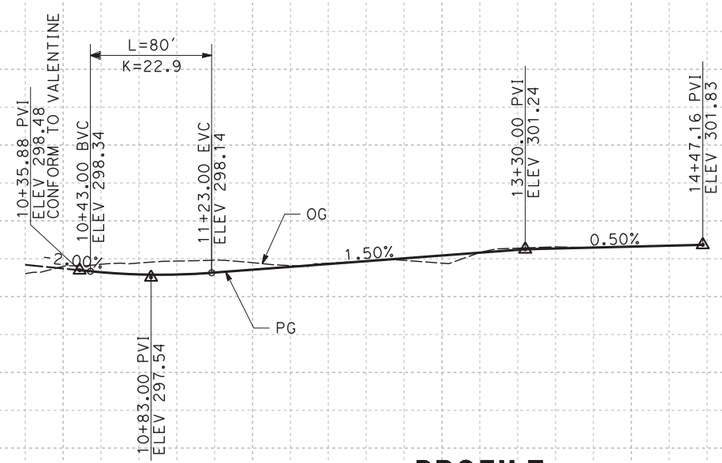

PROFILE
"V1" LINE

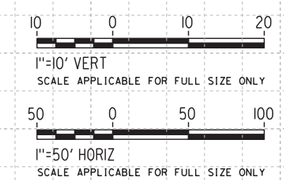

STATION 6 7 8 9 10+00 1 2 3 4 15+00 6 7 8 9 20+00

REV	DATE	BY	CHK	APP	DESCRIPTION

DESIGNED BY G. MANOREK
DRAWN BY B. CHAN
CHECKED BY L. HEUSTON
IN CHARGE F. NOBARI
DATE 11/22/11

PROPOSED PRELIMINARY DESIGN

NOT FOR CONSTRUCTION

AECOM Technical Services, Inc.
2020 L Street, Suite 300
Sacramento, CA 95811
CH2MHILL

CALIFORNIA HIGH-SPEED RAIL AUTHORITY

CALIFORNIA HIGH-SPEED TRAIN PROJECT
SIERRA SUBDIVISION
PACKAGE 1A
ROADWAY
PROFILE AND SUPERELEVATION
SR 99 - N PARKWAY DR "V1"

CONTRACT NO.
DRAWING NO. CV-R1136-R99
SCALE AS SHOWN
SHEET NO.

ychiu 11/16/2013 1:18:37 PM CAHSRP-R1.TBL CHSR_half_black.plt C:\Documents and Settings\ychiu\My Documents\NDMProj\356751 - California High Speed Rail - SR99 Improvements\MF-CV-R1136-R99.dgn

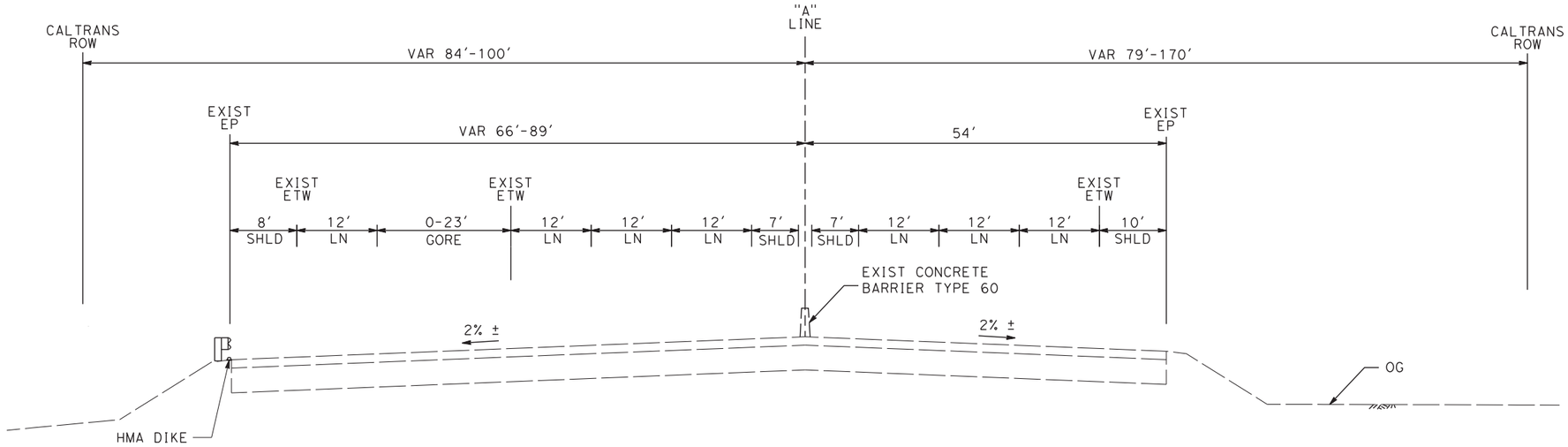

SB "A" 90+20 TO 92+68

NB "A" 90+00 TO 119+55

NOTES:

1. DIMENSIONS OF THE STRUCTURAL SECTIONS ARE SUBJECT TO TOLERANCES SPECIFIED IN THE STANDARD SPECIFICATIONS.
2. SUPERELEVATION AS SHOWN OR AS DIRECTED BY THE ENGINEER.
3. SEE DRAINAGE LAYOUT FOR DRAINAGE DETAILS.
4. SEE TRACK PLAN FOR DETAILS WITHIN HIGH SPEED TRAIN RIGHT OF WAY.

A: 1.0' CRCP, 0.25' HMA, 0.7' AS

B: 0.65' HMA, 0.90' AB, 0.95' AS

C: 0.45' HMA, 1.35' AB

D: 0.25' HMA, 0.60' AB

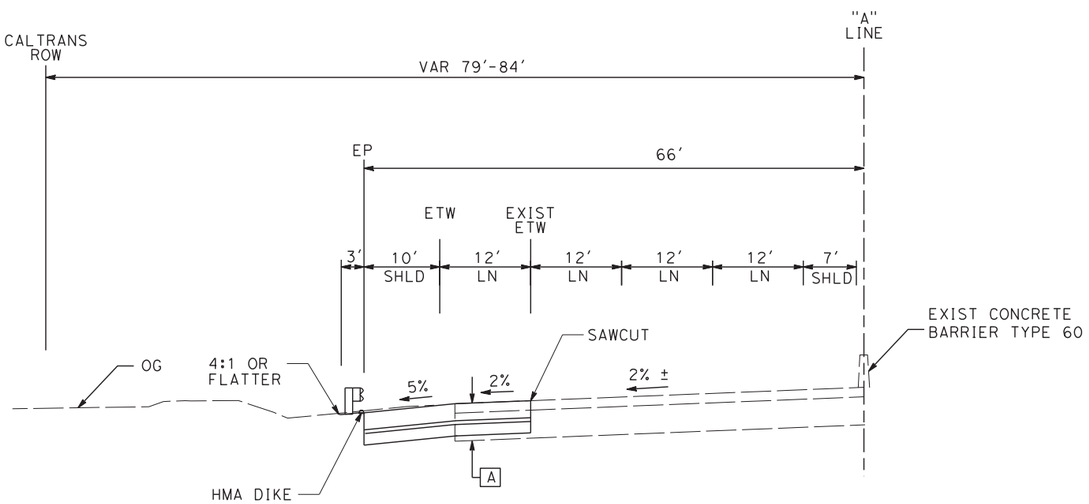

SB "A" 92+68 TO 98+50

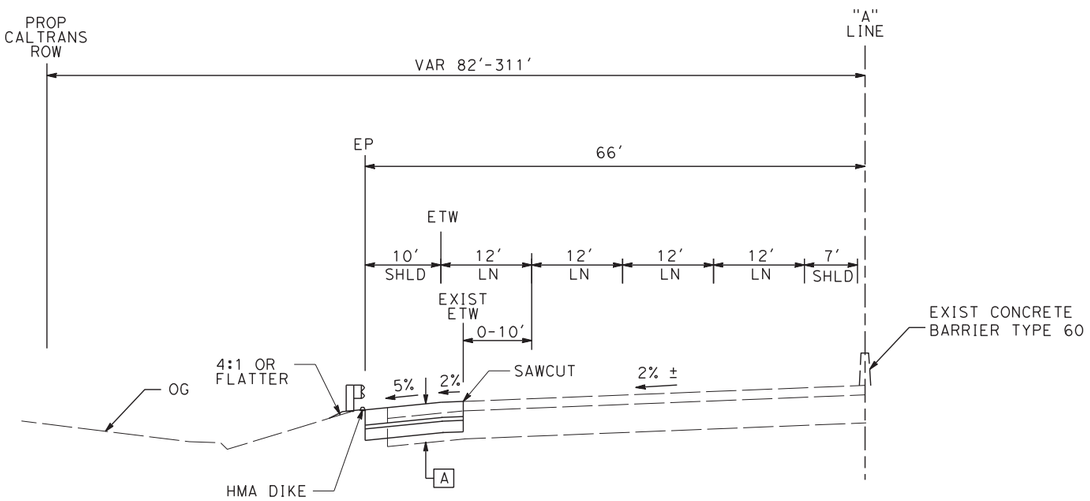

SB "A" 98+50 TO 102+40

ROUTE 99

REV	DATE	BY	CHK	APP	DESCRIPTION

DESIGNED BY G. MANOREK
DRAWN BY B. CHAN
CHECKED BY L. HEUSTON
IN CHARGE F. NOBARI
DATE 11/22/11

PROPOSED PRELIMINARY DESIGN

NOT FOR CONSTRUCTION

AECOM Technical Services, Inc.
2020 L Street, Suite 300
Sacramento, CA 95811
CH2MHILL

CALIFORNIA HIGH-SPEED RAIL AUTHORITY

CALIFORNIA HIGH-SPEED TRAIN PROJECT
SIERRA SUBDIVISION
PACKAGE 1A
ROADWAY
TYPICAL SECTIONS
SR 99 - HIGHWAY

CONTRACT NO.
DRAWING NO. CV-R0001-R99
SCALE AS SHOWN
SHEET NO.

ychiu 11/16/2011 3:32:00 PM CAHSRP-R1.TBL CHSR_half_black.plt C:\Documents and Settings\ychiu\My Documents\NDMProj\356751 - California High Speed Rail - SR99 Improvements\MF-CV-R3001-R99.dgn

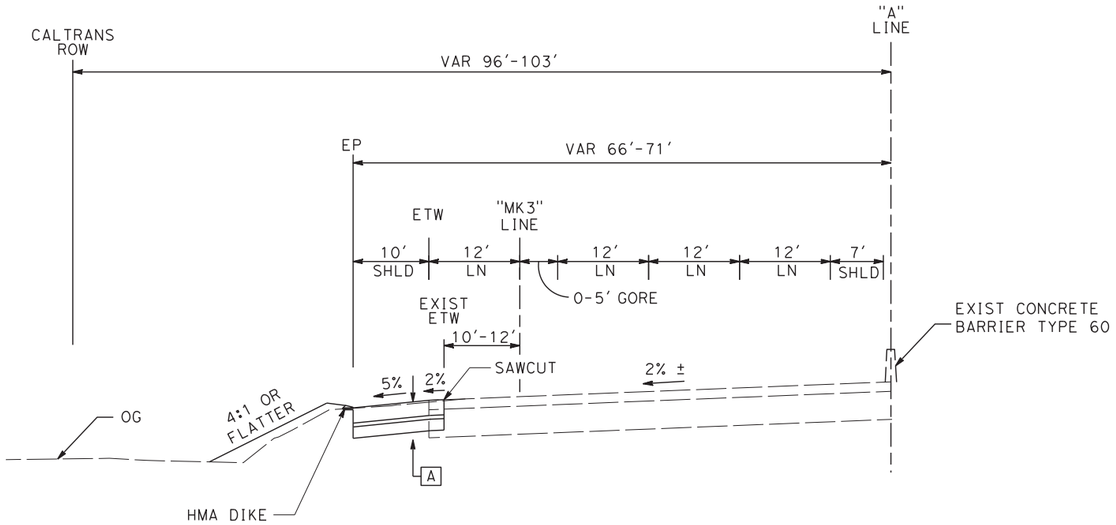

SB "A" 102+40 TO 104+95

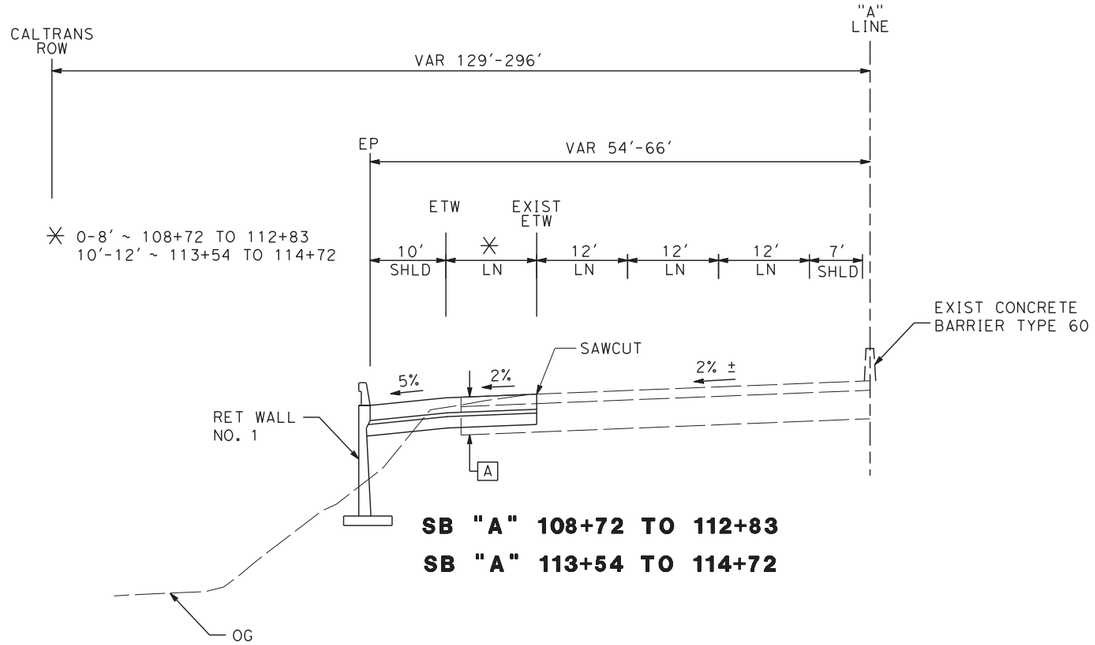

SB "A" 108+72 TO 112+83
SB "A" 113+54 TO 114+72

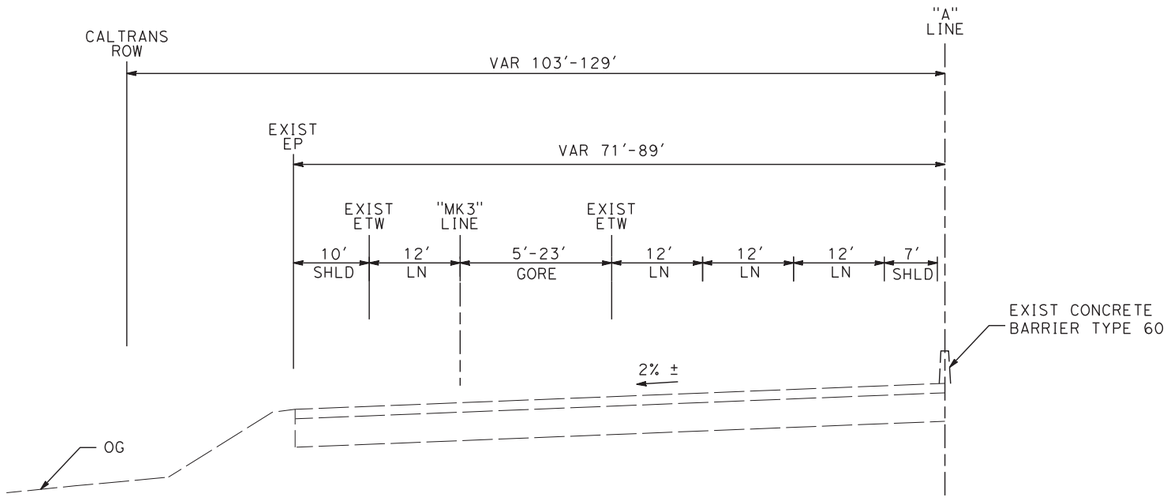

SB "A" 104+95 TO 108+72

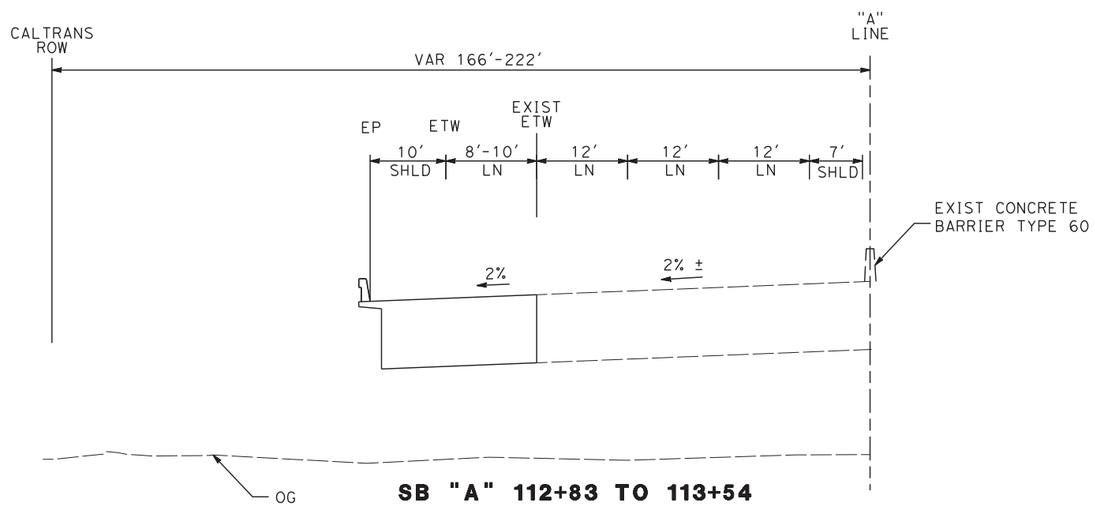

SB "A" 112+83 TO 113+54
McKINLEY AVE UC

ROUTE 99

REV	DATE	BY	CHK	APP	DESCRIPTION

DESIGNED BY G. MANOREK
DRAWN BY B. CHAN
CHECKED BY L. HEUSTON
IN CHARGE F. NOBARI
DATE 11/22/11

PROPOSED PRELIMINARY DESIGN

NOT FOR CONSTRUCTION

AECOM Technical Services, Inc.
2020 L Street, Suite 300
Sacramento, CA 95811
CH2MHILL

CALIFORNIA HIGH-SPEED RAIL AUTHORITY

CALIFORNIA HIGH-SPEED TRAIN PROJECT
SIERRA SUBDIVISION
PACKAGE 1A
ROADWAY
TYPICAL SECTIONS
SR 99 - HIGHWAY

CONTRACT NO.
DRAWING NO. CV-R0002-R99
SCALE AS SHOWN
SHEET NO.

ychiu 11/16/2011 3:32:11 PM CAHSRP-R1.TBL CHSR_half_black.plt C:\Documents and Settings\ychiu\My Documents\NDMProj\356751 - California High Speed Rail - SR99 Improvements\MF-CV-R3002-R99.dgn

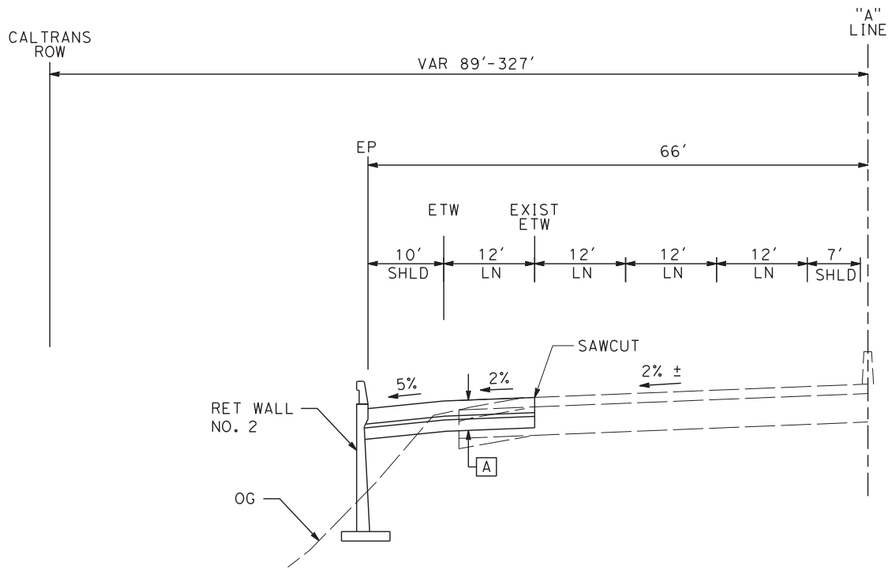

SB "A" 114+72 TO 119+60

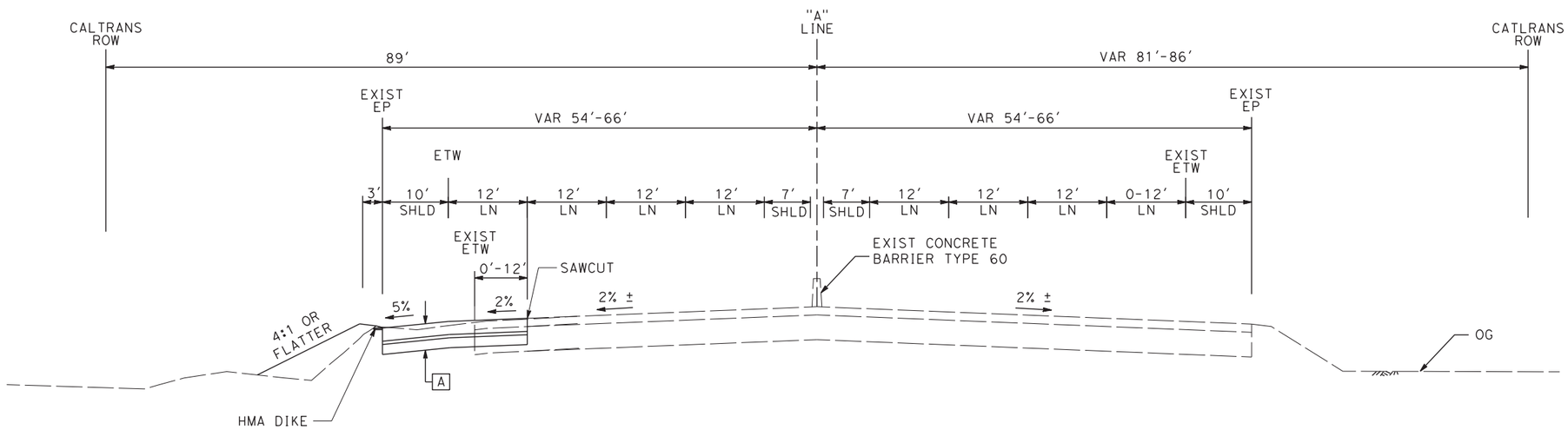

SB "A" 119+60 TO 123+41 **NB "A" 119+55 TO 123+15**

ROUTE 99

REV	DATE	BY	CHK	APP	DESCRIPTION

DESIGNED BY G. MANOREK
DRAWN BY B. CHAN
CHECKED BY L. HEUSTON
IN CHARGE F. NOBARI
DATE 11/22/11

PROPOSED PRELIMINARY DESIGN

NOT FOR CONSTRUCTION

AECOM Technical Services, Inc.
2020 L Street, Suite 300
Sacramento, CA 95811
CH2MHILL

CALIFORNIA HIGH-SPEED RAIL AUTHORITY

CALIFORNIA HIGH-SPEED TRAIN PROJECT
SIERRA SUBDIVISION
PACKAGE 1A
ROADWAY
TYPICAL SECTIONS
SR 99 - HIGHWAY

CONTRACT NO.
DRAWING NO. CV-R0003-R99
SCALE AS SHOWN
SHEET NO.

ychiu 11/16/2011 3:32:23 PM CAHSRP-R1.TBL CHSR_half_black.plt C:\Documents and Settings\ychiu\My Documents\NDMProj\356751 - California High Speed Rail - SR99 Improvements\MF-CV-R3003-R99.dgn

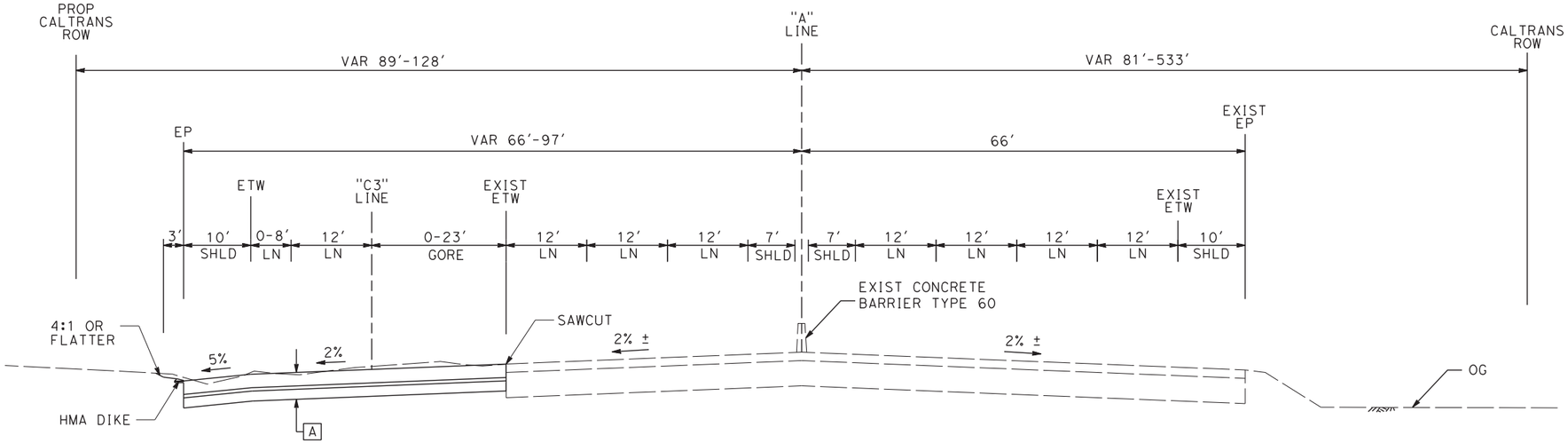

SB "A" 123+41 TO 129+32 **NB "A" 123+15 TO 130+00**

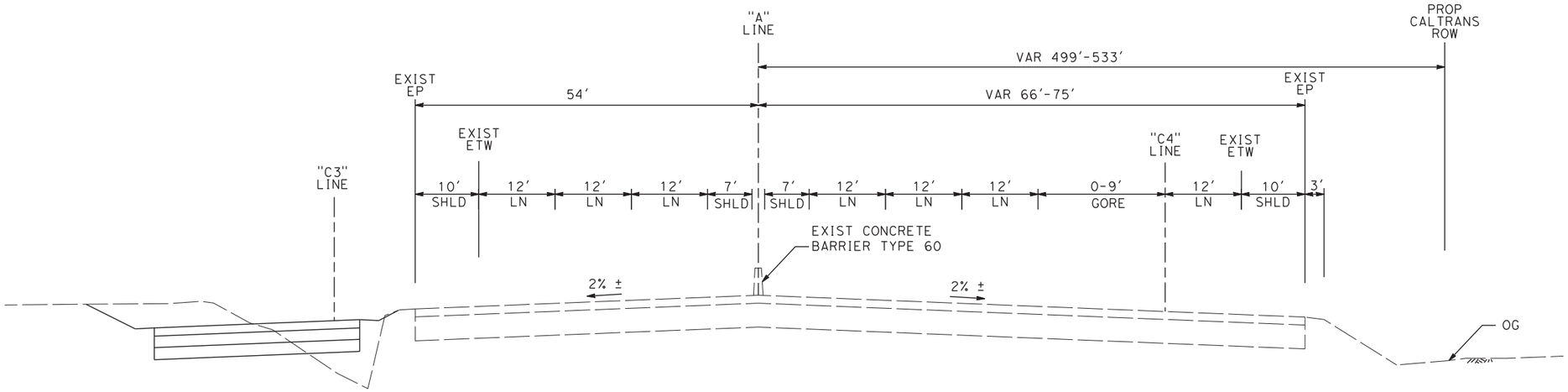

SB "A" 129+32 to 131+23 **NB "A" 130+00 TO 131+23**

ROUTE 99

REV	DATE	BY	CHK	APP	DESCRIPTION

DESIGNED BY G. MANOREK
DRAWN BY B. CHAN
CHECKED BY L. HEUSTON
IN CHARGE F. NOBARI
DATE 11/22/11

PROPOSED PRELIMINARY DESIGN

NOT FOR CONSTRUCTION

AECOM Technical Services, Inc.
2020 L Street, Suite 300
Sacramento, CA 95811
CH2MHILL

CALIFORNIA HIGH-SPEED RAIL AUTHORITY

CALIFORNIA HIGH-SPEED TRAIN PROJECT
SIERRA SUBDIVISION
PACKAGE 1A
ROADWAY
TYPICAL SECTIONS
SR 99 - HIGHWAY

CONTRACT NO.
DRAWING NO. CV-R0004-R99
SCALE AS SHOWN
SHEET NO.

ychiu 11/16/2011 3:32:33 PM CAHSRP-R1.TBL CHSR_half_black.plt C:\Documents and Settings\ychiu\My Documents\NDMProj\356751 - California High Speed Rail - SR99 Improvements\MF-CV-R3004-R99.dgn

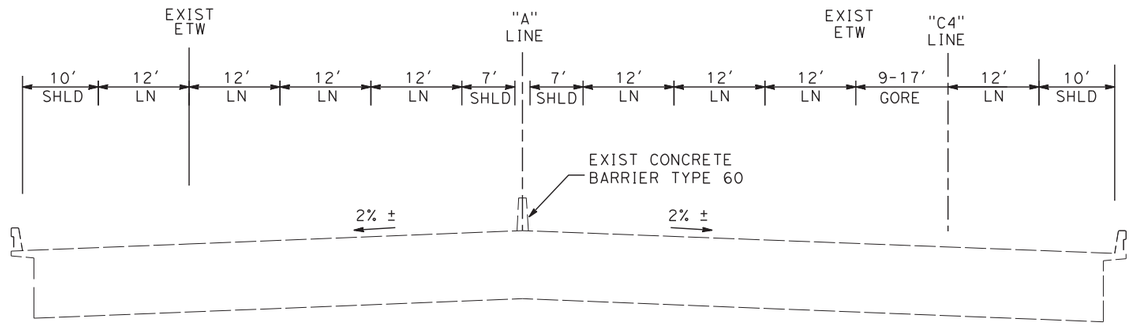

"A" 131+23 TO 132+00
NORTH FRESNO OC

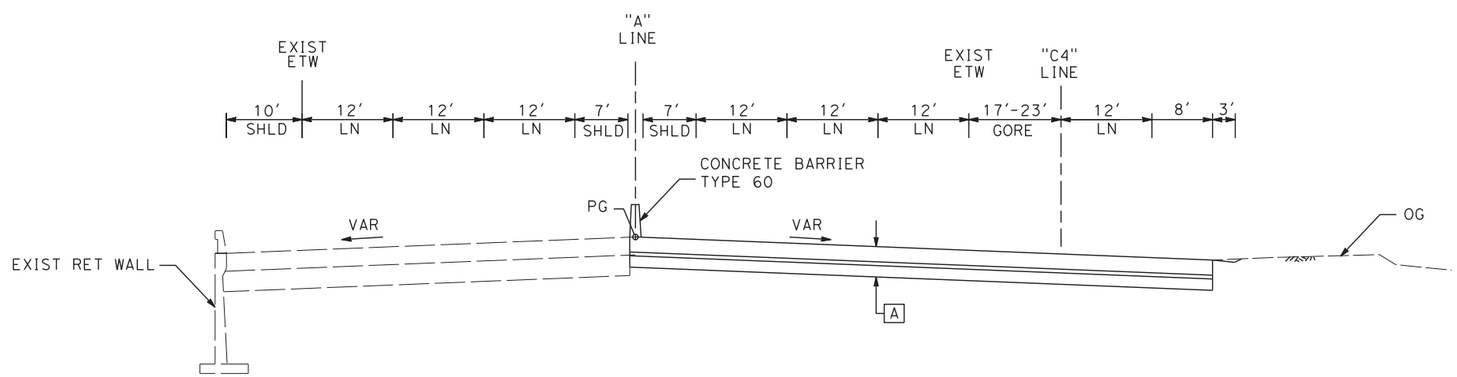

SB "A" 132+00 TO 134+00 **NB "A" 132+00 TO 132+69**

ROUTE 99

REV	DATE	BY	CHK	APP	DESCRIPTION

DESIGNED BY G. MANOREK
DRAWN BY B. CHAN
CHECKED BY L. HEUSTON
IN CHARGE F. NOBARI
DATE 11/22/11

PROPOSED PRELIMINARY DESIGN

NOT FOR CONSTRUCTION

AECOM Technical Services, Inc.
2020 L Street, Suite 300
Sacramento, CA 95811
CH2MHILL

CALIFORNIA HIGH-SPEED RAIL AUTHORITY

CALIFORNIA HIGH-SPEED TRAIN PROJECT
SIERRA SUBDIVISION
PACKAGE 1A
ROADWAY
TYPICAL SECTIONS
SR 99 - HIGHWAY

CONTRACT NO.
DRAWING NO. CV-R0005-R99
SCALE AS SHOWN
SHEET NO.

ychiu 11/16/2011 3:32:43 PM CAHSRP-R1.TBL CHSR_half_black.plt C:\Documents and Settings\ychiu\My Documents\NDMProj\356751 - California High Speed Rail - SR99 Improvements\MF-CV-R3005-R99.dgn

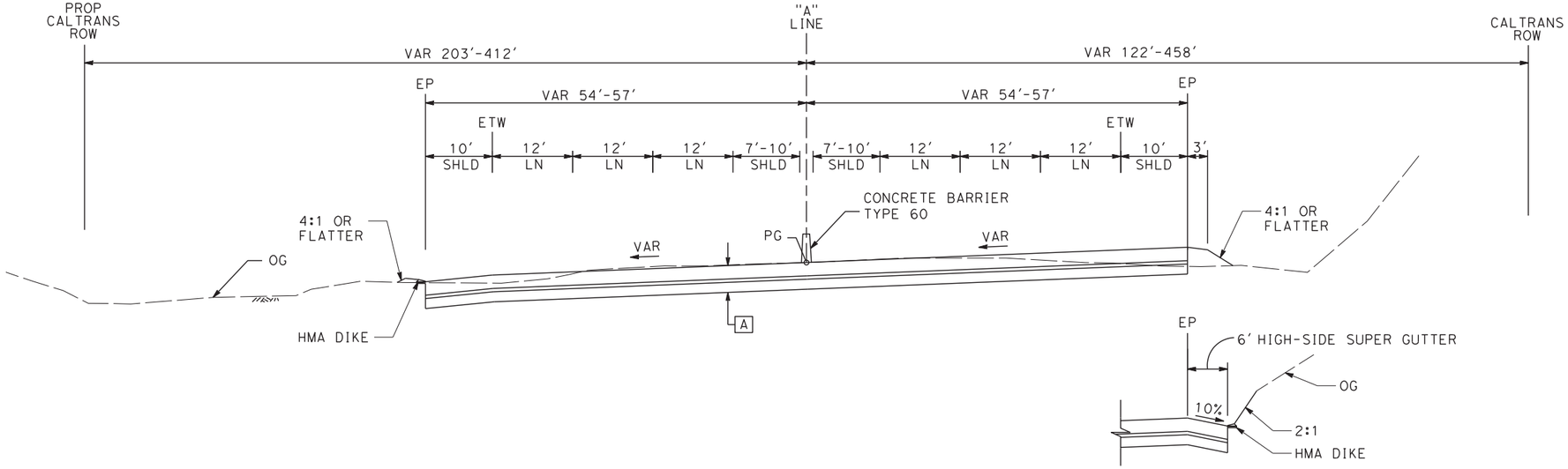

NB "A" 135+95 TO 148+05

SB "A" 134+00 TO 146+00

NB "A" 132+69 TO 152+22

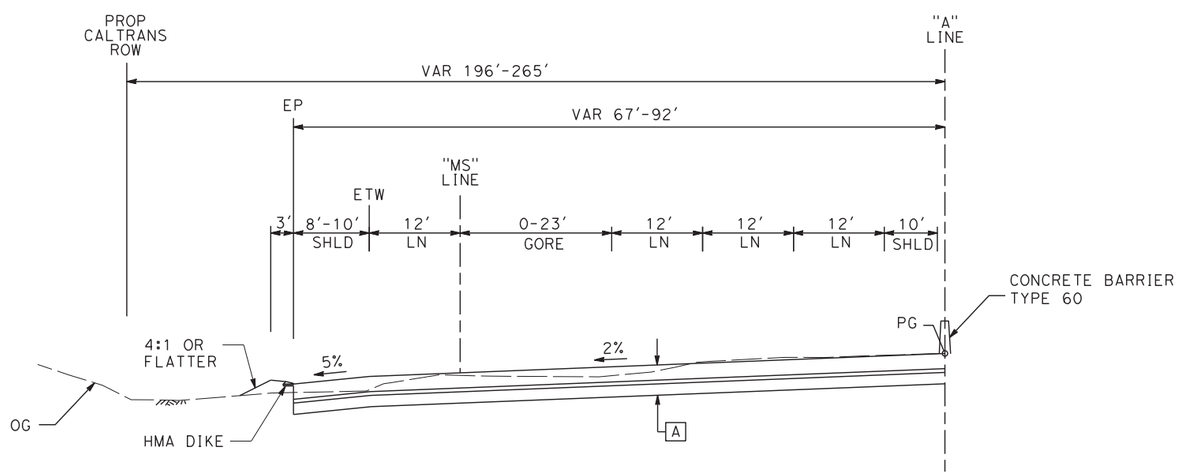

SB "A" 146+00 TO 148+85

ROUTE 99

REV	DATE	BY	CHK	APP	DESCRIPTION

DESIGNED BY G. MANOREK
DRAWN BY B. CHAN
CHECKED BY L. HEUSTON
IN CHARGE F. NOBARI
DATE 2/17/12

PROPOSED PRELIMINARY DESIGN

NOT FOR CONSTRUCTION

AECOM Technical Services, Inc.
2020 L Street, Suite 300
Sacramento, CA 95811
CH2MHILL

CALIFORNIA HIGH-SPEED RAIL AUTHORITY

CALIFORNIA HIGH-SPEED TRAIN PROJECT
SIERRA SUBDIVISION
PACKAGE 1A
ROADWAY
TYPICAL SECTIONS
SR 99 - HIGHWAY

CONTRACT NO.
DRAWING NO. CV-R0006-R99
SCALE AS SHOWN
SHEET NO.

ychiu 2/16/2012 4:54:22 PM CAHSRP-R1.TBL CHSR_half_black.plt C:\Documents and Settings\ychiu\My Documents\NDMProj\356751 - California High Speed Rail - SR99 Improvements\MF-CV-R3006-R99_OPTION

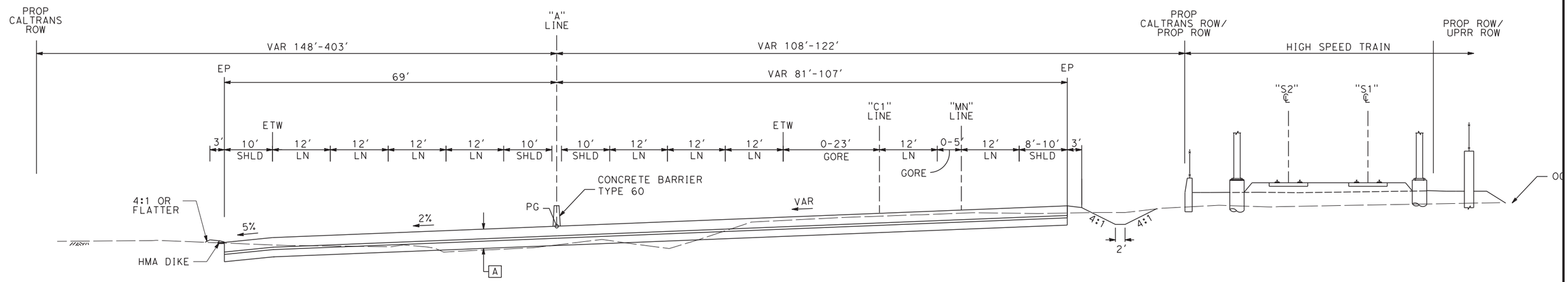

SB "A" 148+85 TO 157+21 **NB "A" 152+22 TO 158+14**

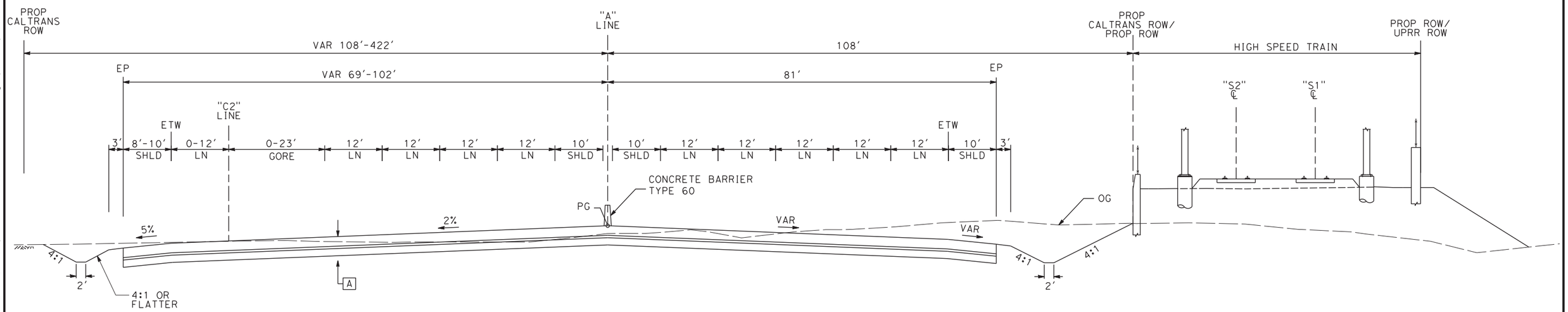

SB "A" 157+21 TO 161+31 **NB "A" 158+14 TO 168+14**

ROUTE 99

REV	DATE	BY	CHK	APP	DESCRIPTION

DESIGNED BY G. MANOREK
DRAWN BY B. CHAN
CHECKED BY L. HEUSTON
IN CHARGE F. NOBARI
DATE 11/22/11

PROPOSED PRELIMINARY DESIGN

NOT FOR CONSTRUCTION

AECOM Technical Services, Inc.
2020 L Street, Suite 300
Sacramento, CA 95811
CH2MHILL

CALIFORNIA HIGH-SPEED RAIL AUTHORITY

CALIFORNIA HIGH-SPEED TRAIN PROJECT
SIERRA SUBDIVISION
PACKAGE 1A
ROADWAY
TYPICAL SECTIONS
SR 99 - HIGHWAY

CONTRACT NO.
DRAWING NO. CV-R0007-R99
SCALE AS SHOWN
SHEET NO.

ychiu 11/16/2011 3:33:02 PM CAHSRP-R1.TBL CHSR_half_black.plt C:\Documents and Settings\ychiu\My Documents\NDMProj\356751 - California High Speed Rail - SR99 Improvements\MF-CV-R3007-R99.dgn

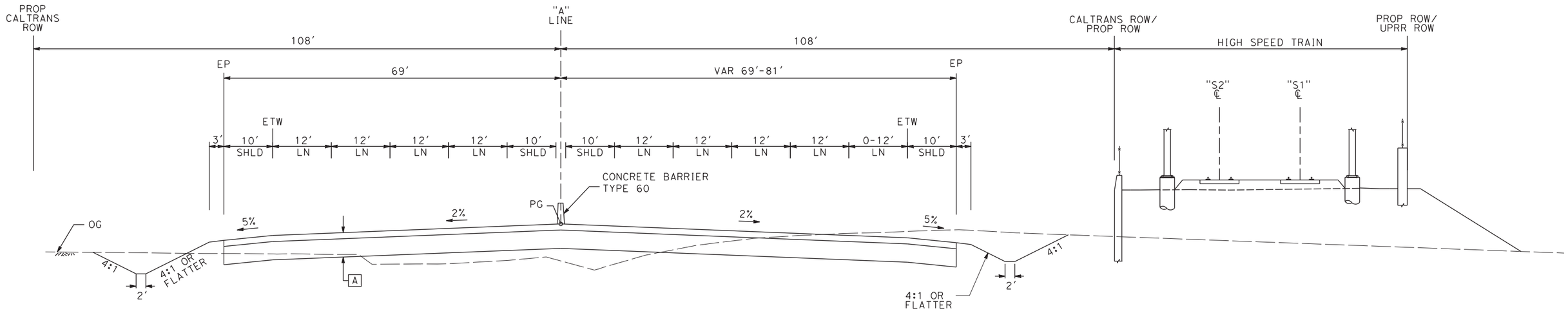

SB "A" 161+31 TO 174+14 **NB "A" 168+14 TO 174+14**

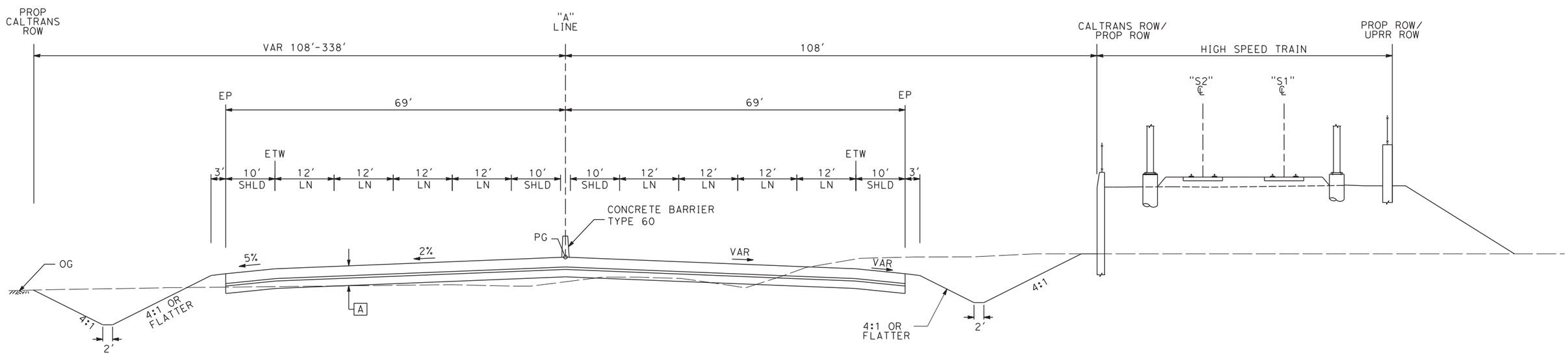

SB "A" 174+14 TO 219+06 **NB "A" 174+14 TO 221+20**

ROUTE 99

REV	DATE	BY	CHK	APP	DESCRIPTION

DESIGNED BY G. MANOREK
DRAWN BY B. CHAN
CHECKED BY L. HEUSTON
IN CHARGE F. NOBARI
DATE 11/22/11

PROPOSED PRELIMINARY DESIGN

NOT FOR CONSTRUCTION

AECOM Technical Services, Inc.
2020 L Street, Suite 300
Sacramento, CA 95811
CH2MHILL

CALIFORNIA HIGH-SPEED RAIL AUTHORITY

CALIFORNIA HIGH-SPEED TRAIN PROJECT
SIERRA SUBDIVISION
PACKAGE 1A
ROADWAY
TYPICAL SECTIONS
SR 99 - HIGHWAY

CONTRACT NO.
DRAWING NO. CV-R0008-R99
SCALE AS SHOWN
SHEET NO.

ychiu 11/16/2011 3:33:16 PM CAHSRP-R1.TBL CHSR_half_black.plt C:\Documents and Settings\ychiu\My Documents\NDMProj\356751 - California High Speed Rail - SR99 Improvements\MF-CV-R3008-R99.dgn

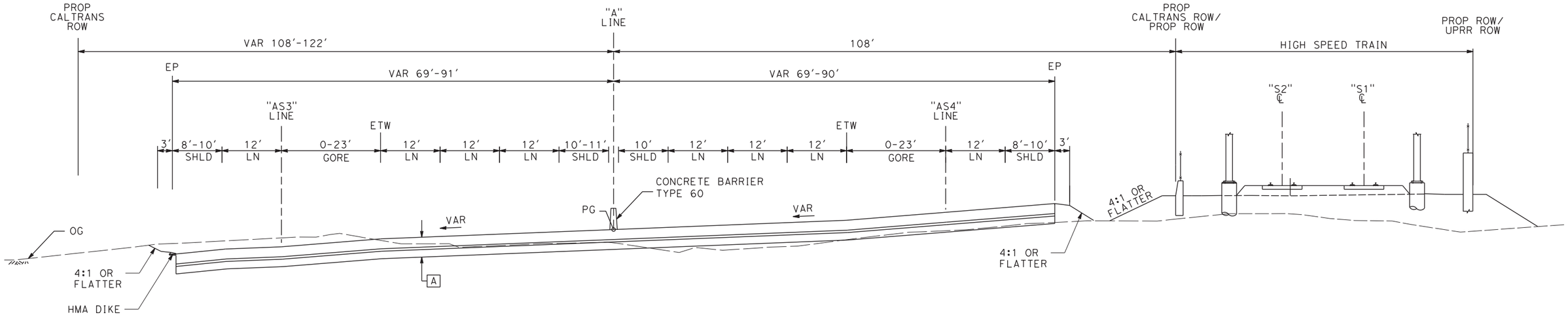

SB "A" 219+06 TO 225+38 **NB "A" 221+20 TO 223+86**

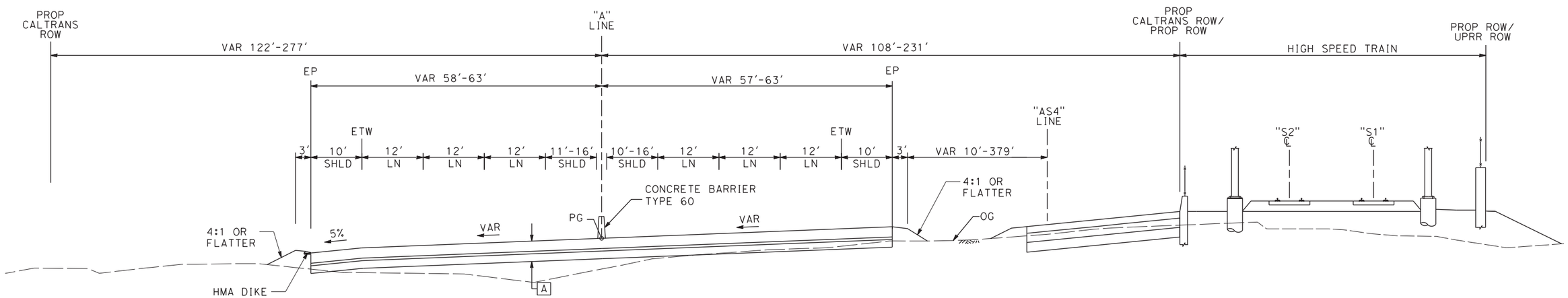

SB "A" 225+38 TO 237+30 **NB "A" 223+86 TO 237+30**

ROUTE 99

REV	DATE	BY	CHK	APP	DESCRIPTION

DESIGNED BY G. MANOREK
DRAWN BY B. CHAN
CHECKED BY L. HEUSTON
IN CHARGE F. NOBARI
DATE 11/22/11

PROPOSED PRELIMINARY DESIGN

NOT FOR CONSTRUCTION

AECOM Technical Services, Inc.
2020 L Street, Suite 300
Sacramento, CA 95811

CH2MHILL

CALIFORNIA HIGH-SPEED RAIL AUTHORITY

CALIFORNIA HIGH-SPEED TRAIN PROJECT
SIERRA SUBDIVISION
PACKAGE 1A
ROADWAY
TYPICAL SECTIONS
SR 99 - HIGHWAY

CONTRACT NO.
DRAWING NO. CV-R0009-R99
SCALE AS SHOWN
SHEET NO.

ychiu 12/1/2011 10:45:25 AM CAHSRP-R1.TBL CHSR_half_black.plt C:\Documents and Settings\ychiu\My Documents\NDMProj\356751 - California High Speed Rail - SR99 Improvements\MF-CV-R3009-R99.dgn

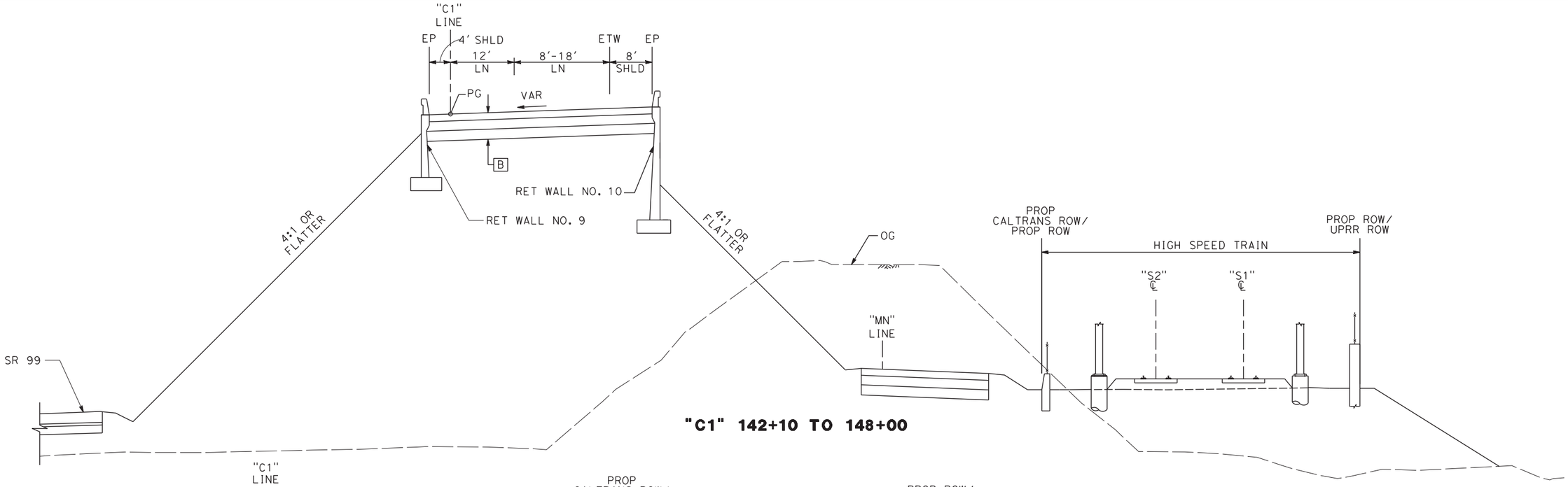

"C1" 142+10 TO 148+00

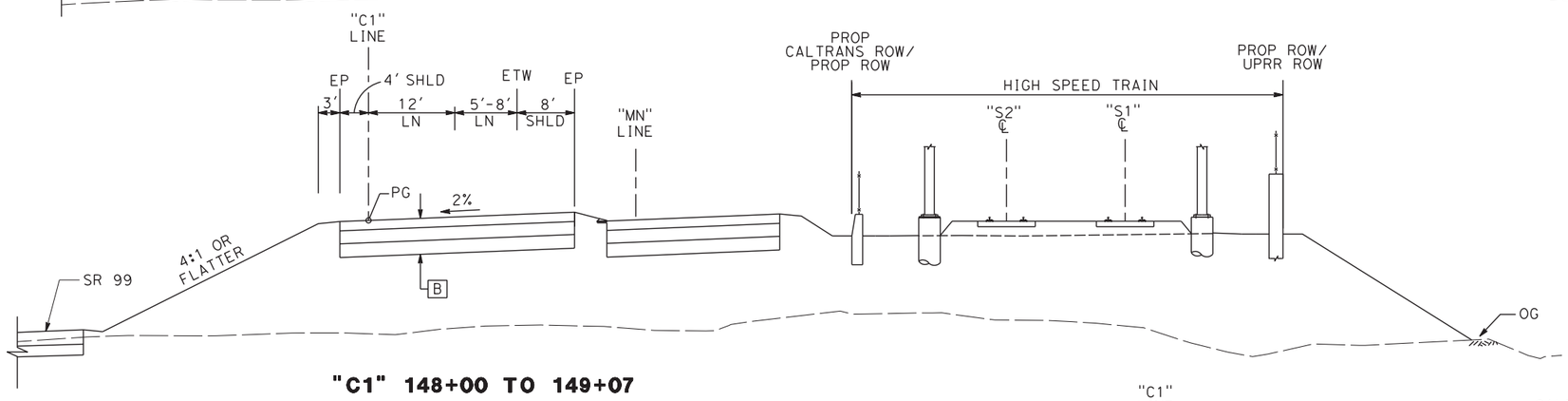

"C1" 148+00 TO 149+07

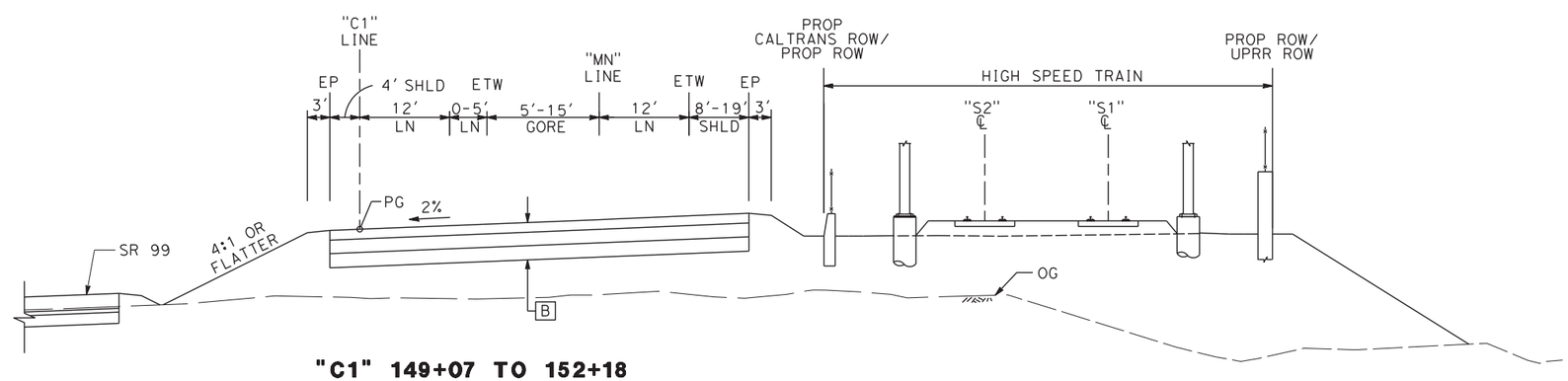

C1 LINE
NB ON RAMP AT W CLINTON AVE

"C1" 149+07 TO 152+18

REV	DATE	BY	CHK	APP	DESCRIPTION

DESIGNED BY G. MANOREK
DRAWN BY B. CHAN
CHECKED BY L. HEUSTON
IN CHARGE F. NOBARI
DATE 11/22/11

PROPOSED PRELIMINARY DESIGN

NOT FOR CONSTRUCTION

AECOM Technical Services, Inc.
2020 L Street, Suite 300
Sacramento, CA 95811
CH2MHILL

CALIFORNIA HIGH-SPEED RAIL AUTHORITY

CALIFORNIA HIGH-SPEED TRAIN PROJECT
SIERRA SUBDIVISION
PACKAGE 1A
ROADWAY
TYPICAL SECTIONS
SR 99 - RAMP "C1"

CONTRACT NO.
DRAWING NO. CV-R0010-R99
SCALE AS SHOWN
SHEET NO.

ychiu 11/16/2011 3:33:39 PM CAHSRP-R1.TBL CHSR_half_black.plt C:\Documents and Settings\ychiu\My Documents\NDMProj\356751 - California High Speed Rail - SR99 Improvements\MF-CV-R3010-R99.dgn

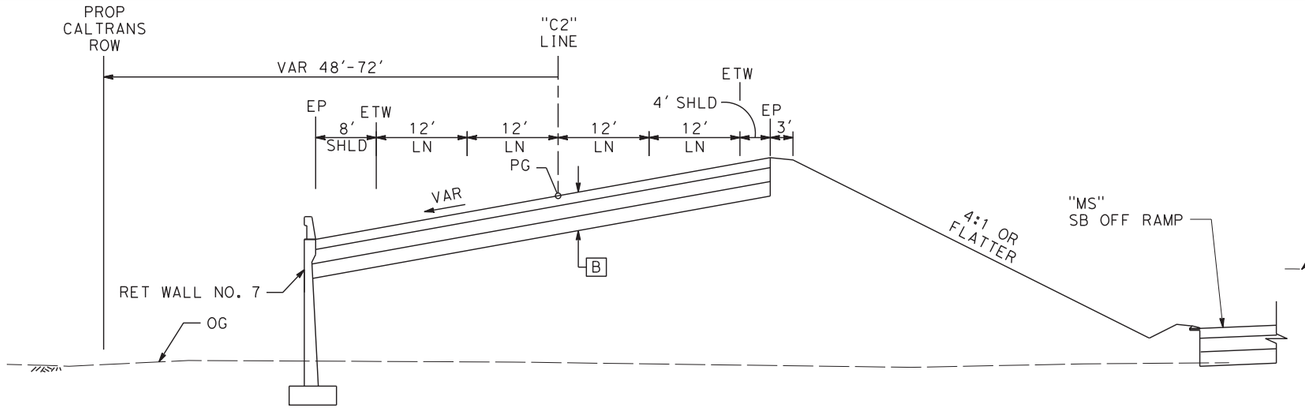

"C2" 144+66 TO 147+50

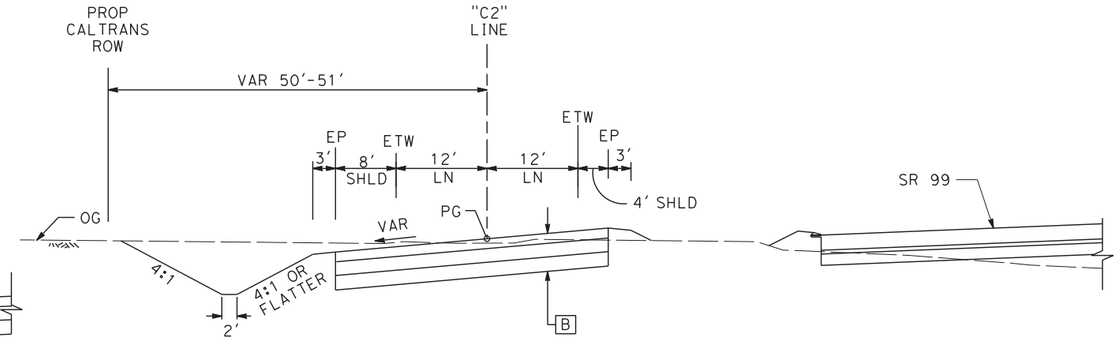

"C2" 150+81 TO 154+31

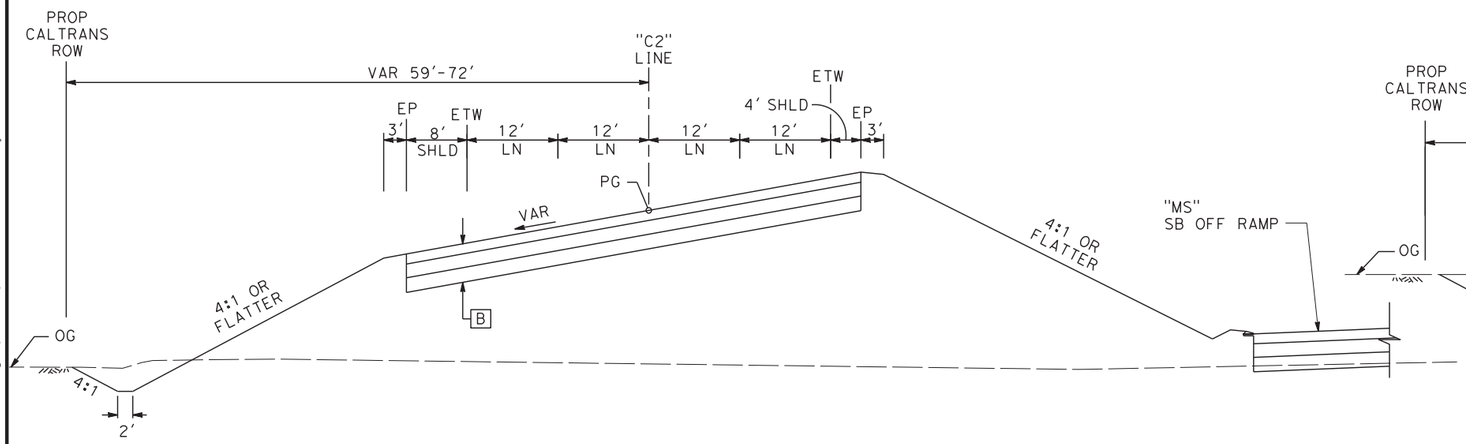

"C2" 147+50 TO 149+70

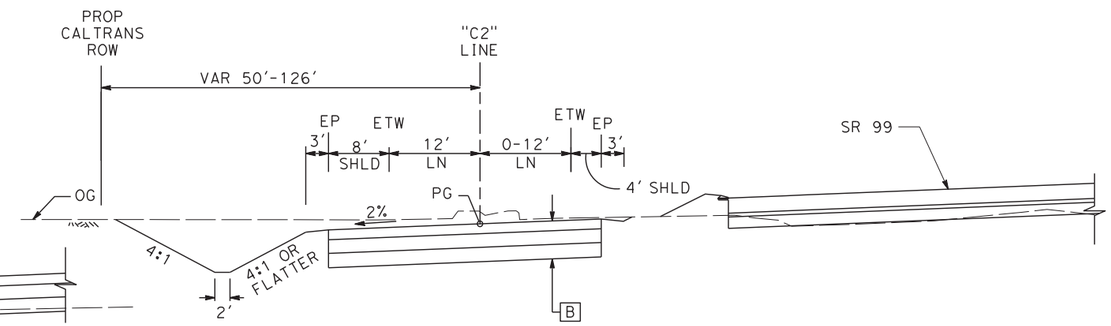

"C2" 154+31 TO 155+51

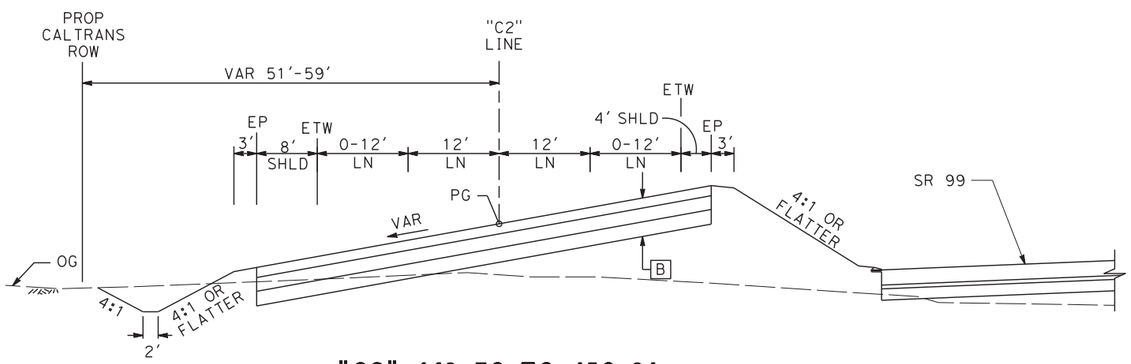

"C2" 149+70 TO 150+81

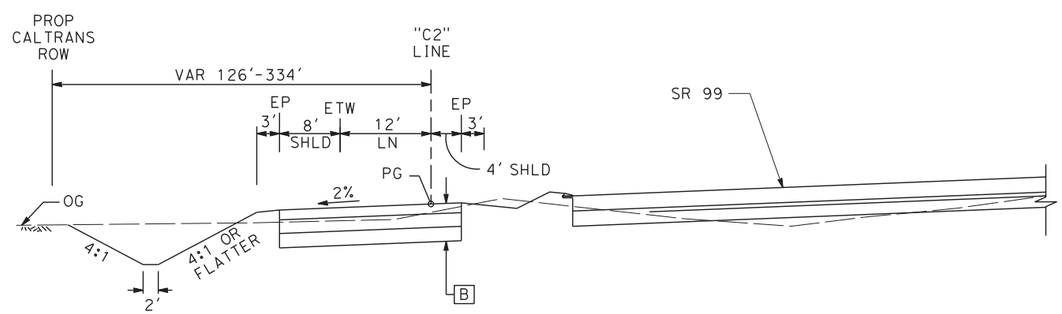

"C2" 155+51 TO 157+21

"C2" LINE
SB OFF RAMP AT CLINTON AVE

REV	DATE	BY	CHK	APP	DESCRIPTION

DESIGNED BY G. MANOREK
DRAWN BY B. CHAN
CHECKED BY L. HEUSTON
IN CHARGE F. NOBARI
DATE 11/22/11

PROPOSED PRELIMINARY DESIGN

NOT FOR CONSTRUCTION

AECOM Technical Services, Inc.
2020 L Street, Suite 300
Sacramento, CA 95811
CH2MHILL

CALIFORNIA HIGH-SPEED RAIL AUTHORITY

CALIFORNIA HIGH-SPEED TRAIN PROJECT
SIERRA SUBDIVISION
PACKAGE 1A
ROADWAY
TYPICAL SECTIONS
SR 99 - RAMP "C2"

CONTRACT NO.
DRAWING NO. CV-R0011-R99
SCALE AS SHOWN
SHEET NO.

ychiu 11/16/2011 3:34:02 PM CAHSRP-R1.TBL CHSR_half_black.plt C:\Documents and Settings\ychiu\My Documents\NDMProj\356751 - California High Speed Rail - SR99 Improvements\MF-CV-R3011-R99.dgn

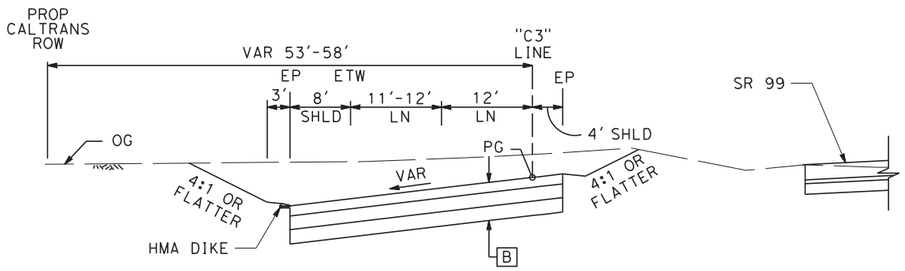

"C3" 129+44 TO 130+64

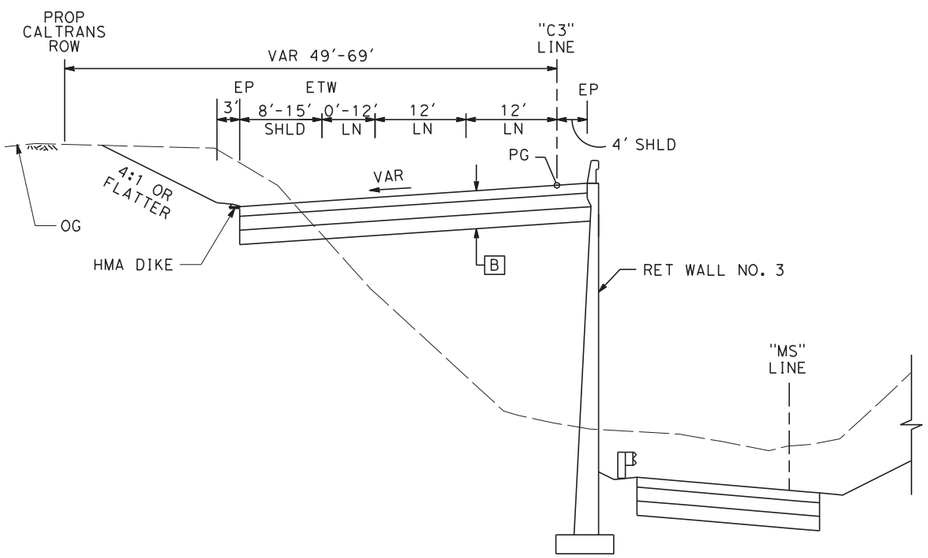

"C3" 130+64 TO 134+85

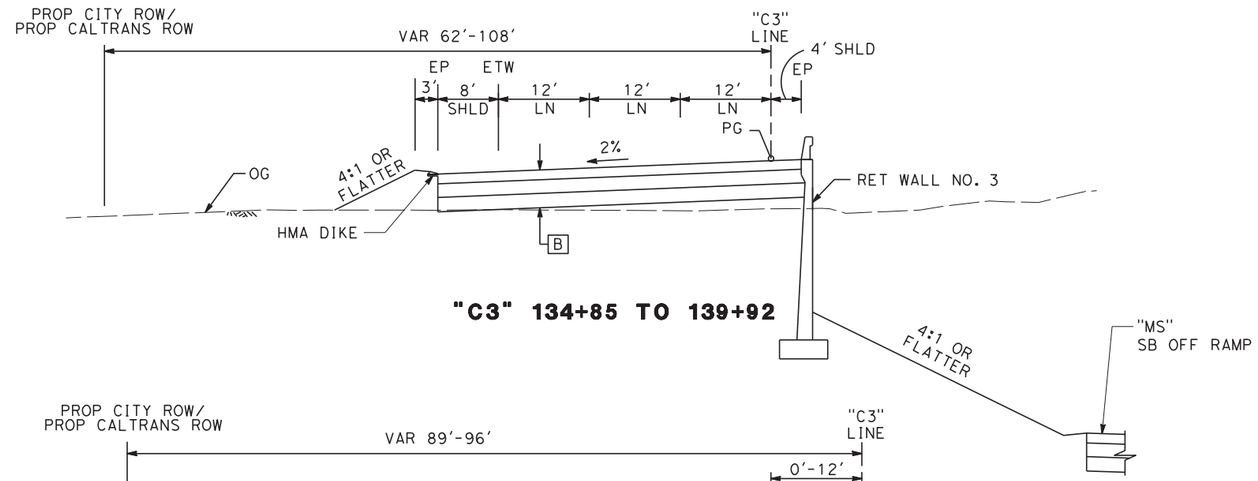

"C3" 134+85 TO 139+92

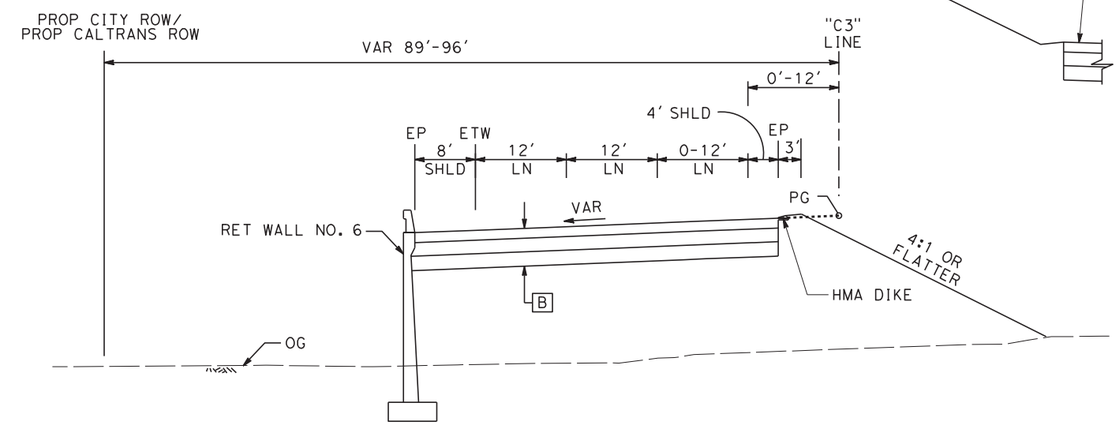

"C3" 139+92 TO 141+33

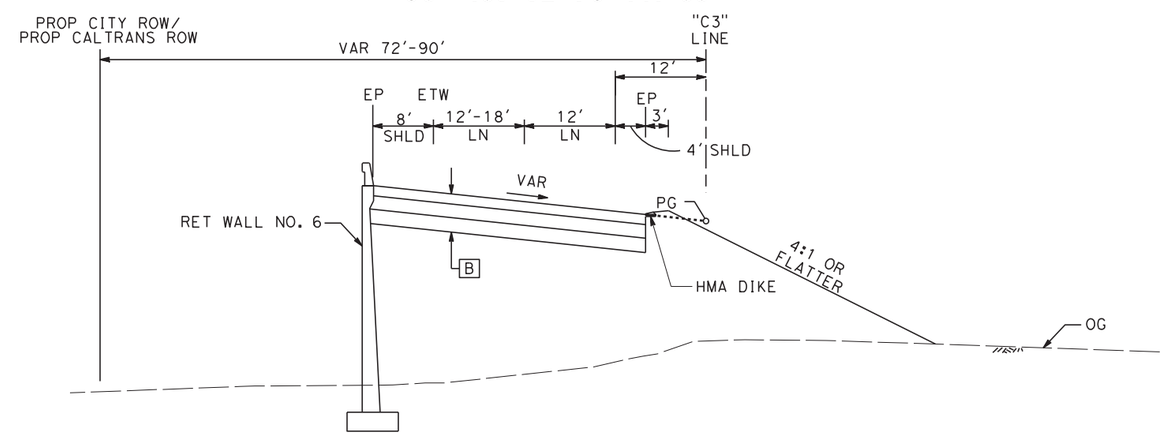

"C3" 141+33 TO 143+64

C3 LINE
SB ON RAMP AT W CLINTON AVE

REV	DATE	BY	CHK	APP	DESCRIPTION

DESIGNED BY G. MANOREK
DRAWN BY B. CHAN
CHECKED BY L. HEUSTON
IN CHARGE F. NOBARI
DATE 2/17/12

PROPOSED PRELIMINARY DESIGN

NOT FOR CONSTRUCTION

AECOM Technical Services, Inc.
2020 L Street, Suite 300
Sacramento, CA 95811
CH2MHILL

CALIFORNIA HIGH-SPEED RAIL AUTHORITY

CALIFORNIA HIGH-SPEED TRAIN PROJECT
SIERRA SUBDIVISION
PACKAGE 1A
ROADWAY
TYPICAL SECTIONS
SR 99 - RAMP "C3"

CONTRACT NO.
DRAWING NO. CV-R0012-R99
SCALE AS SHOWN
SHEET NO.

sleong 2/13/2012 2:25:47 PM CAHSRP-R1.TBL CHSR_half_black-pdf995.pc4 Documents and Settings\sleong\My Documents\NDMProj\356751 - California High Speed Rail - SR99 Improvements\MF-CV-R3012-R99_OPTIO

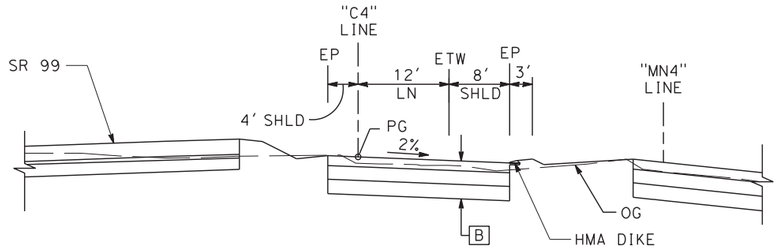

"C4" 132+69 TO 133+22

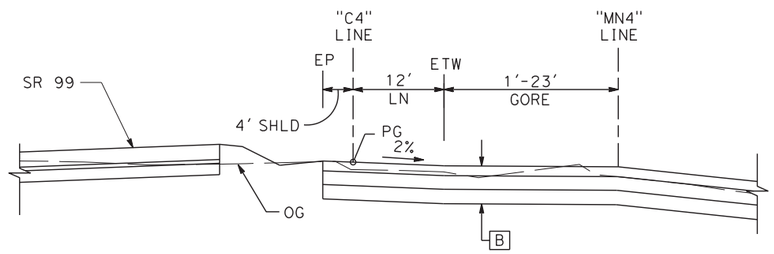

"C4" 133+22 TO 134+72

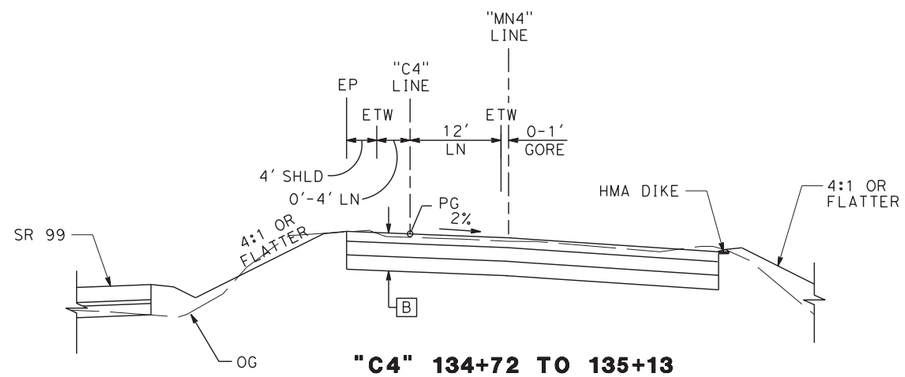

"C4" 134+72 TO 135+13

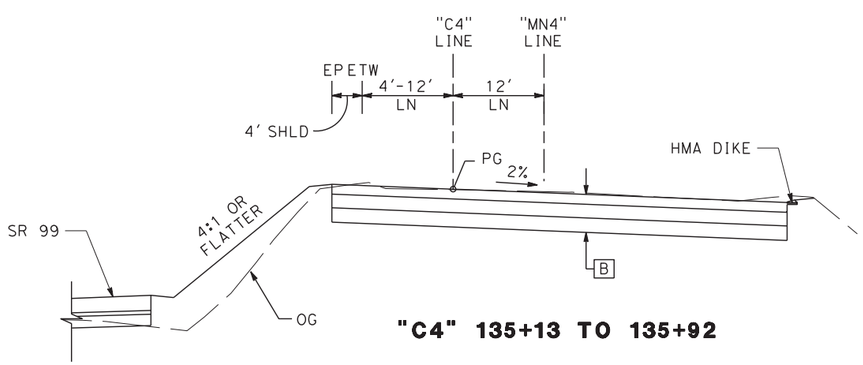

"C4" 135+13 TO 135+92

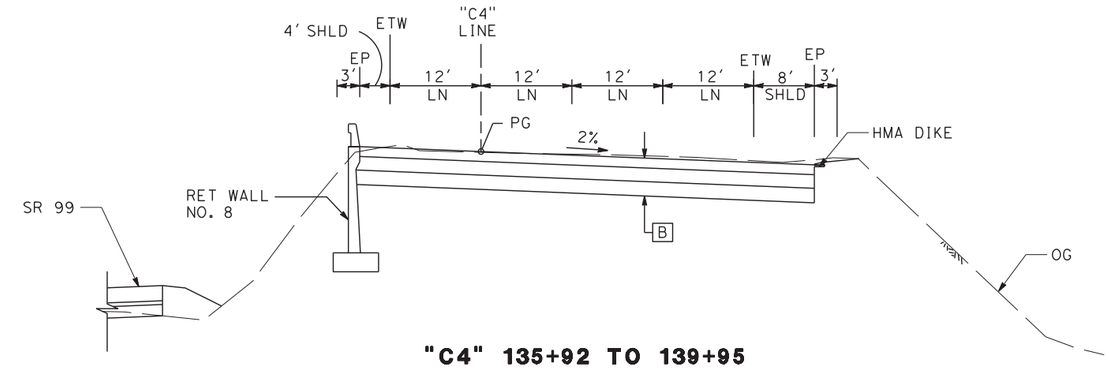

"C4" 135+92 TO 139+95

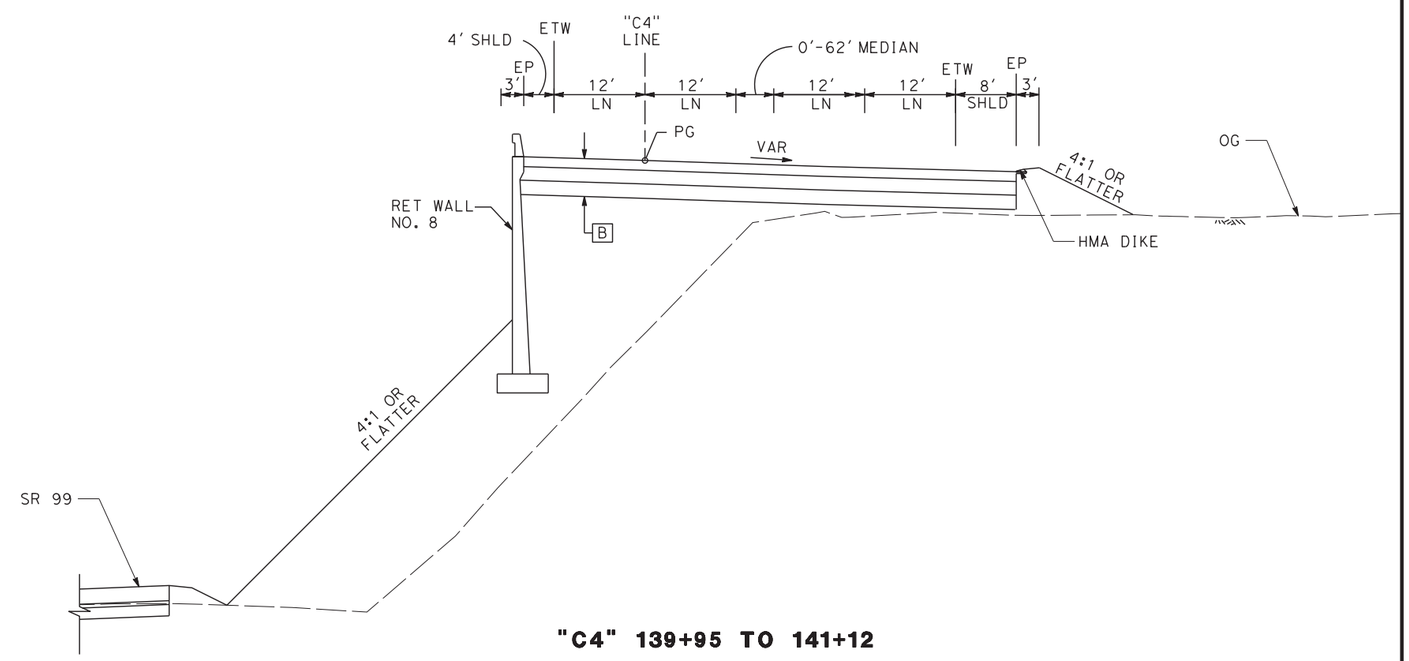

"C4" 139+95 TO 141+12

C4 LINE
NB OFF RAMP AT W CLINTON AVE

REV	DATE	BY	CHK	APP	DESCRIPTION

DESIGNED BY G. MANOREK
DRAWN BY B. CHAN
CHECKED BY L. HEUSTON
IN CHARGE F. NOBARI
DATE 11/22/11

PROPOSED PRELIMINARY DESIGN

NOT FOR CONSTRUCTION

AECOM Technical Services, Inc.
2020 L Street, Suite 300
Sacramento, CA 95811
CH2MHILL

CALIFORNIA HIGH-SPEED RAIL AUTHORITY

CALIFORNIA HIGH-SPEED TRAIN PROJECT
SIERRA SUBDIVISION
PACKAGE 1A
ROADWAY
TYPICAL SECTIONS
SR 99 - RAMP "C4"

CONTRACT NO.
DRAWING NO. CV-R0013-R99
SCALE AS SHOWN
SHEET NO.

ychiu 11/16/2011 3:34:24 PM CAHSRP-R1.TBL CHSR_half_black.plt C:\Documents and Settings\ychiu\My Documents\NDMProj\356751 - California High Speed Rail - SR99 Improvements\MF-CV-R3013-R99.dgn

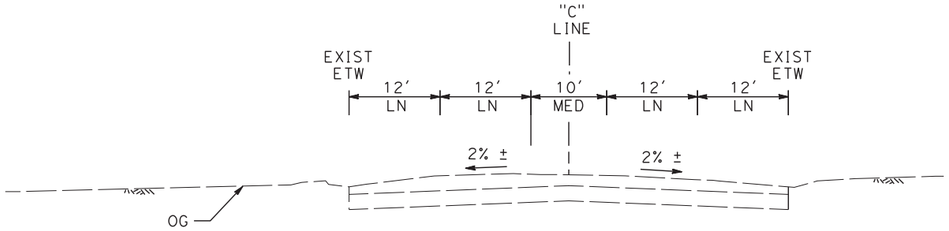

"C" 10+00 TO 11+60

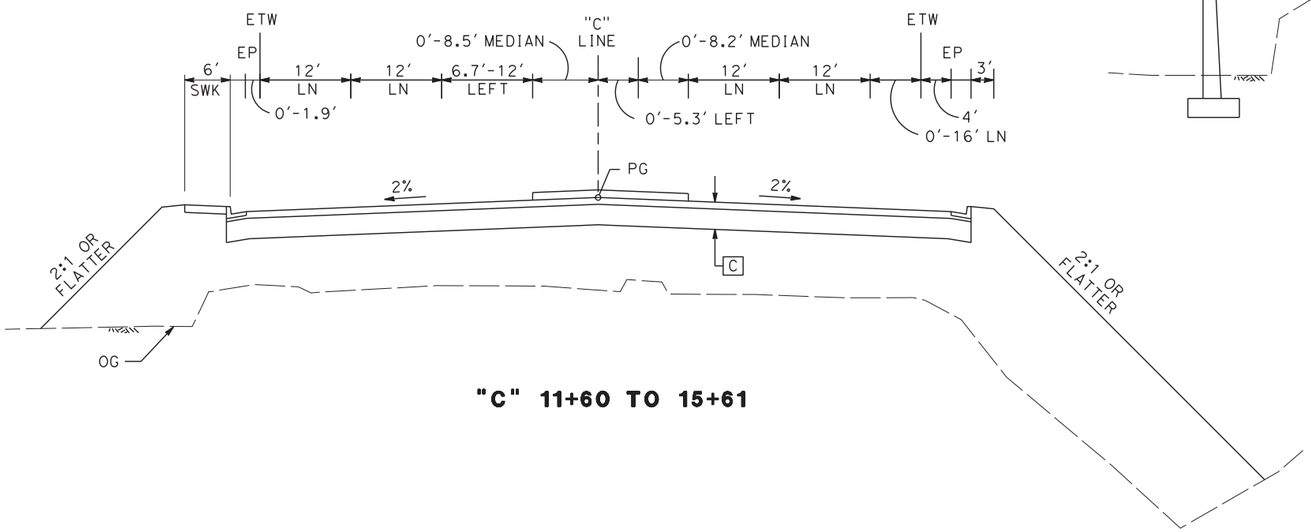

"C" 11+60 TO 15+61

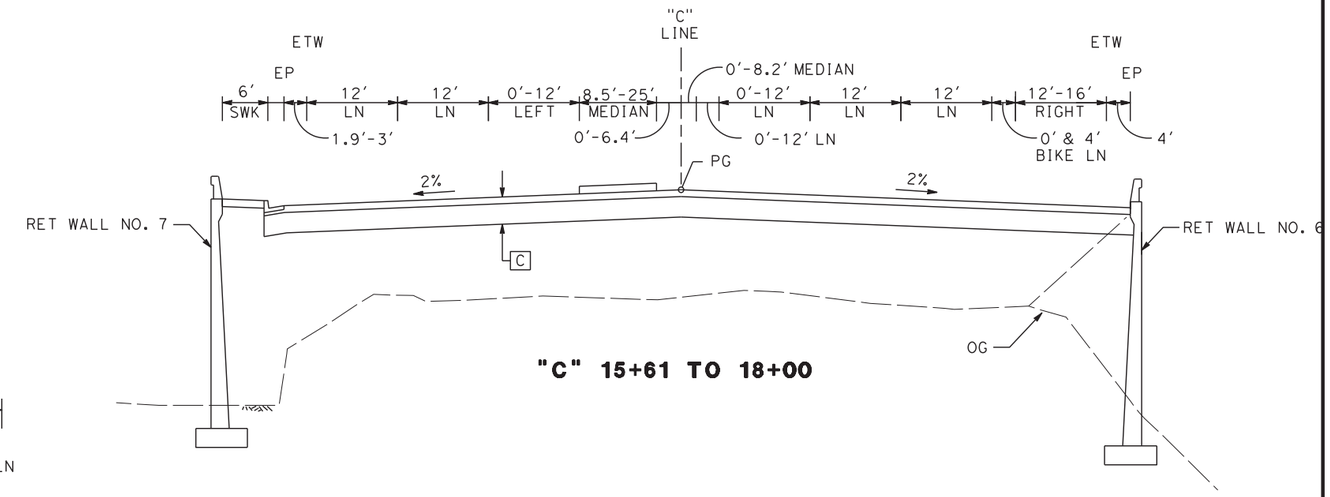

"C" 15+61 TO 18+00

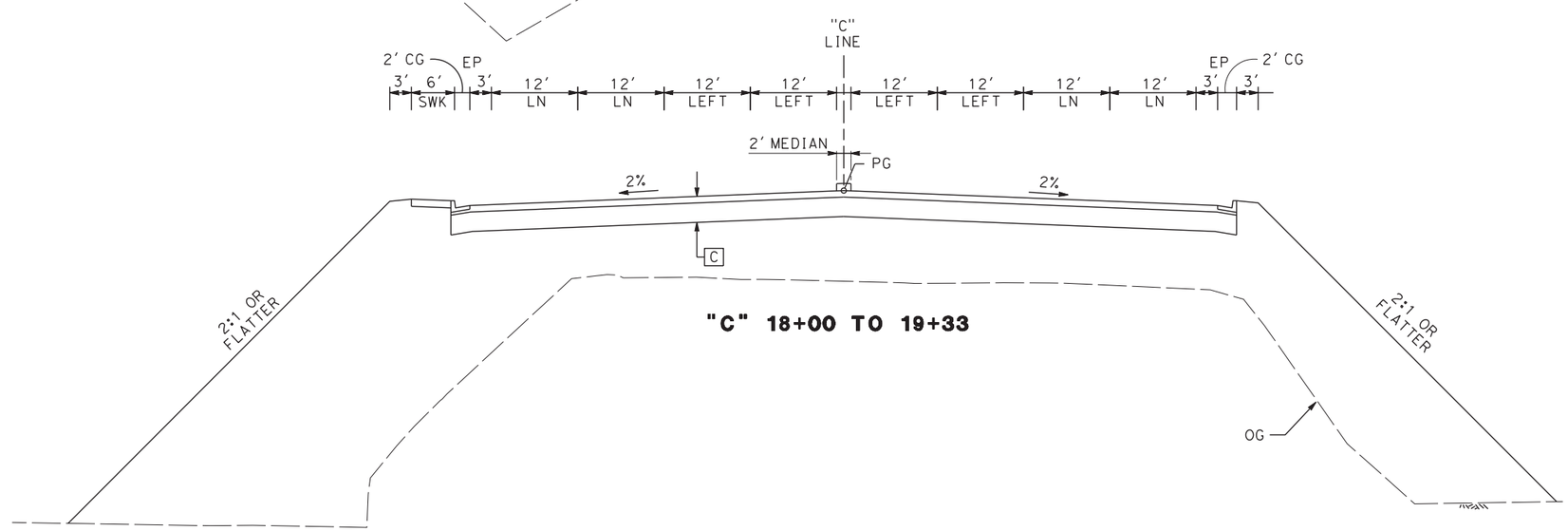

"C" 18+00 TO 19+33

C LINE
W CLINTON AVE

REV	DATE	BY	CHK	APP	DESCRIPTION

DESIGNED BY G. MANOREK
DRAWN BY B. CHAN
CHECKED BY L. HEUSTON
IN CHARGE F. NOBARI
DATE 11/22/11

PROPOSED PRELIMINARY DESIGN

NOT FOR CONSTRUCTION

AECOM Technical Services, Inc.
2020 L Street, Suite 300
Sacramento, CA 95811
CH2MHILL

CALIFORNIA HIGH-SPEED RAIL AUTHORITY

CALIFORNIA HIGH-SPEED TRAIN PROJECT
SIERRA SUBDIVISION
PACKAGE 1A
ROADWAY
TYPICAL SECTIONS
SR 99 - W CLINTON AVE

CONTRACT NO.
DRAWING NO. CV-R0014-R99
SCALE AS SHOWN
SHEET NO.

ychiu 11/16/2011 3:34:39 PM CAHSRP-R1.TBL CHSR_half_black.plt C:\Documents and Settings\ychiu\My Documents\NDMProj\356751 - California High Speed Rail - SR99 Improvements\MF-CV-R3014-R99.dgn

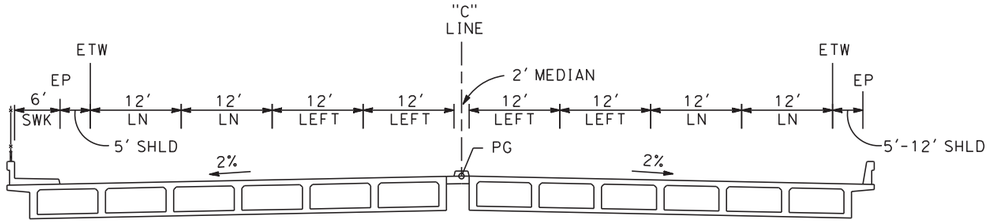

"C" 19+33 TO 22+60
W CLINTON AVE OC

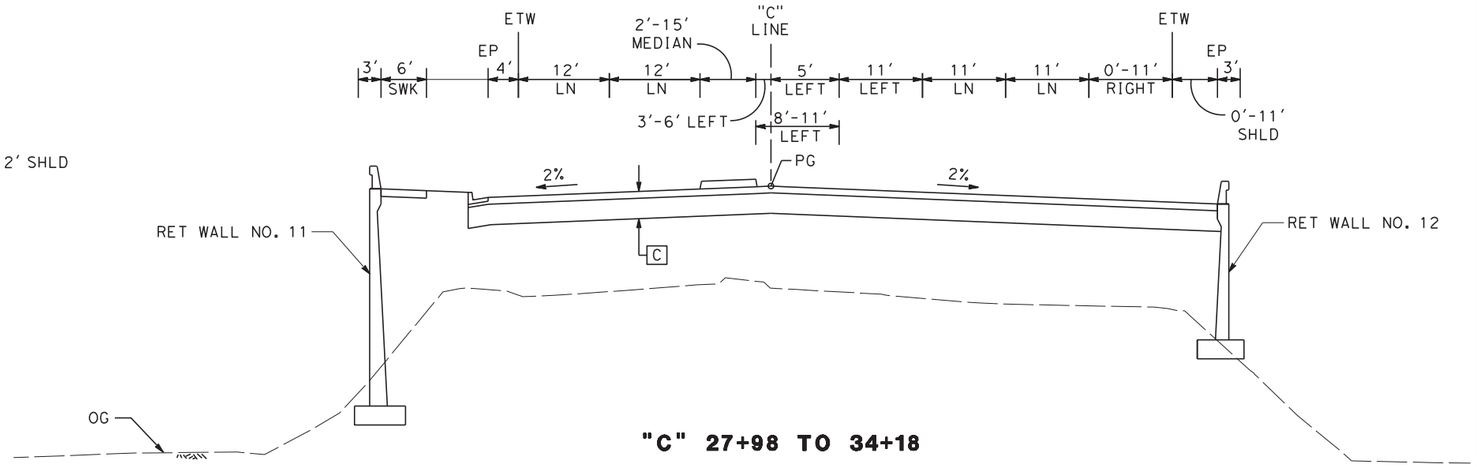

"C" 27+98 TO 34+18

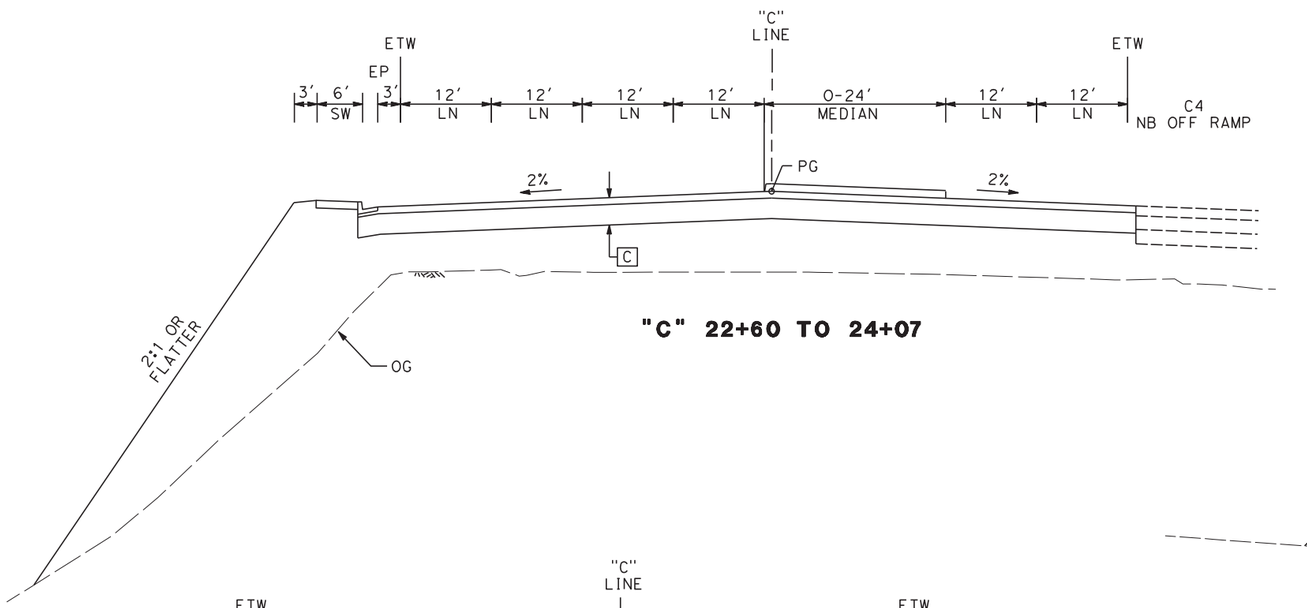

"C" 22+60 TO 24+07

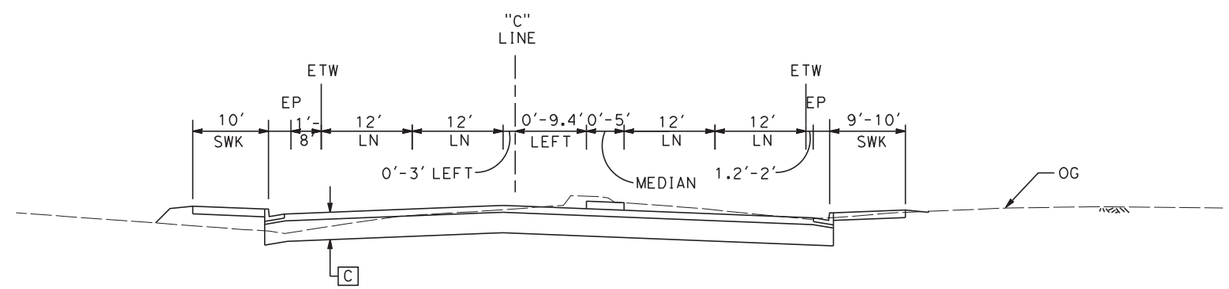

"C" 34+18 TO 37+09

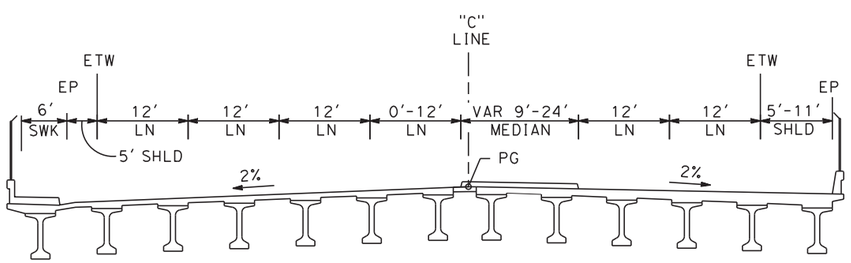

"C" 24+07 TO 27+98
FRESNO YARD OH

REV	DATE	BY	CHK	APP	DESCRIPTION

DESIGNED BY G. MANOREK
DRAWN BY B. CHAN
CHECKED BY L. HEUSTON
IN CHARGE F. NOBARI
DATE 2/17/12

PROPOSED PRELIMINARY DESIGN

NOT FOR CONSTRUCTION

AECOM Technical Services, Inc.
2020 L Street, Suite 300
Sacramento, CA 95811
CH2MHILL

CALIFORNIA HIGH-SPEED RAIL AUTHORITY

CALIFORNIA HIGH-SPEED TRAIN PROJECT
SIERRA SUBDIVISION
PACKAGE 1A
ROADWAY
TYPICAL SECTIONS
SR 99 - W CLINTON AVE

CONTRACT NO.
DRAWING NO. CV-R0015-R99
SCALE AS SHOWN
SHEET NO.

sleong 2/13/2012 2:27:11 PM CAHSRP-R1.TBL CHSR_half_black-pdf995.pt C:\Documents and Settings\sleong\My Documents\NDMProj\356751 - California High Speed Rail - SR99 Improvements\WF-CV-R3015-R99_OPTIO

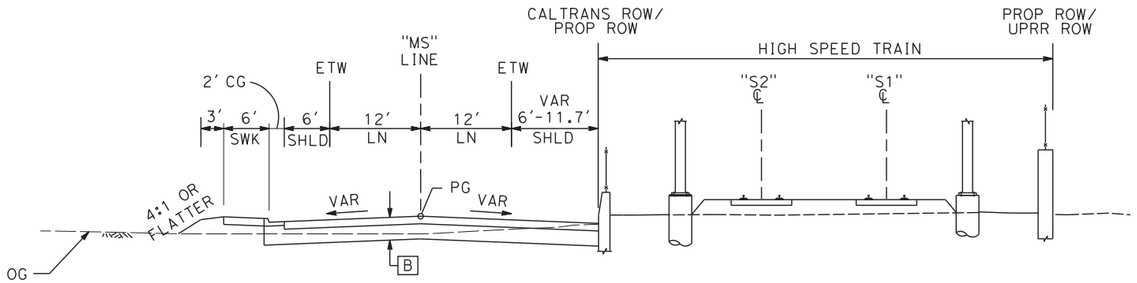

"MS" 113+93 TO 120+50

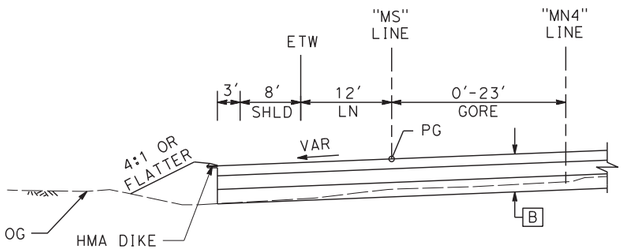

"MS" 120+50 TO 123+06

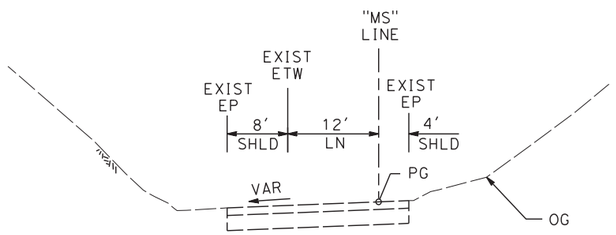

"MS" 126+00 TO 132+57

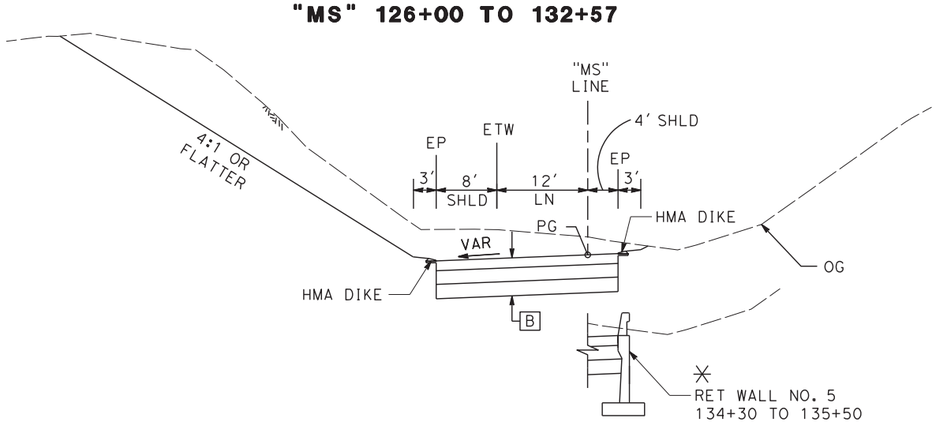

"MS" 123+06 TO 126+00
"MS" 132+57 TO 146+11

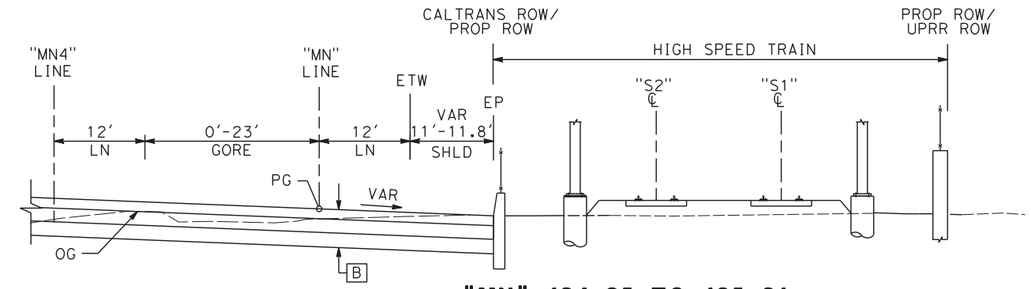

"MN" 124+25 TO 125+21

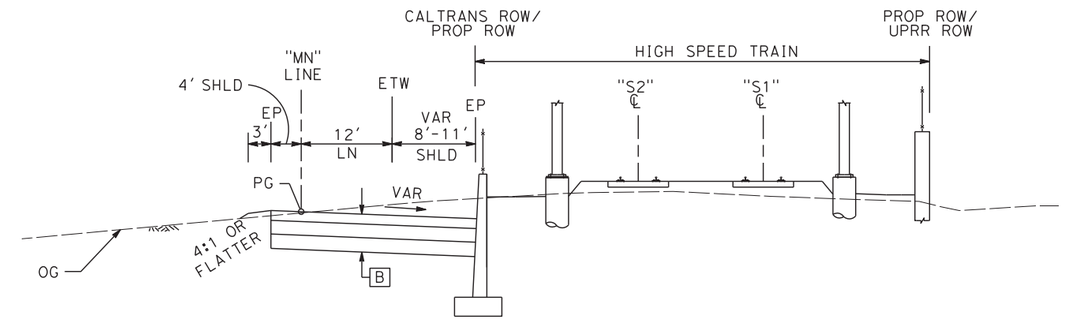

"MN" 125+21 TO 139+00

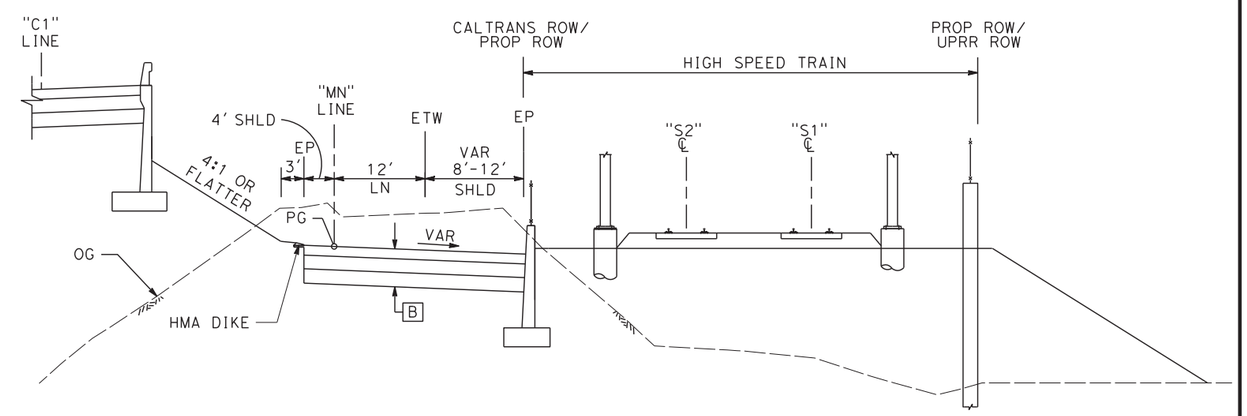

"MN" 139+00 TO 149+07

REV	DATE	BY	CHK	APP	DESCRIPTION

DESIGNED BY G. MANOREK
DRAWN BY B. CHAN
CHECKED BY L. HEUSTON
IN CHARGE F. NOBARI
DATE 11/22/11

PROPOSED PRELIMINARY DESIGN

NOT FOR CONSTRUCTION

AECOM Technical Services, Inc.
2020 L Street, Suite 300
Sacramento, CA 95811
CH2MHILL

CALIFORNIA HIGH-SPEED RAIL AUTHORITY

CALIFORNIA HIGH-SPEED TRAIN PROJECT
SIERRA SUBDIVISION
PACKAGE 1A
ROADWAY
TYPICAL SECTIONS
SR 99 - RAMP "MS", "MN"

CONTRACT NO.
DRAWING NO. CV-R0016-R99
SCALE AS SHOWN
SHEET NO.

ychiu 11/16/2011 3:34:56 PM CAHSRP-R1.TBL CHSR_half_black.plt C:\Documents and Settings\ychiu\My Documents\NDMProj\356751 - California High Speed Rail - SR99 Improvements\MF-CV-R3016-R99.dgn

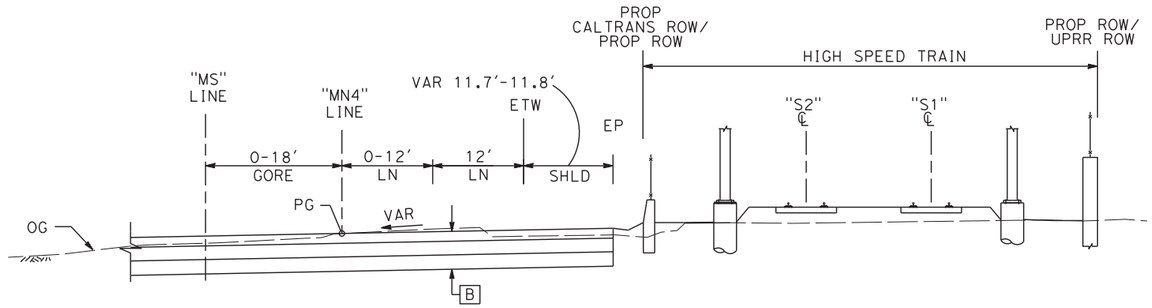

"MN4" 120+47 TO 122+70

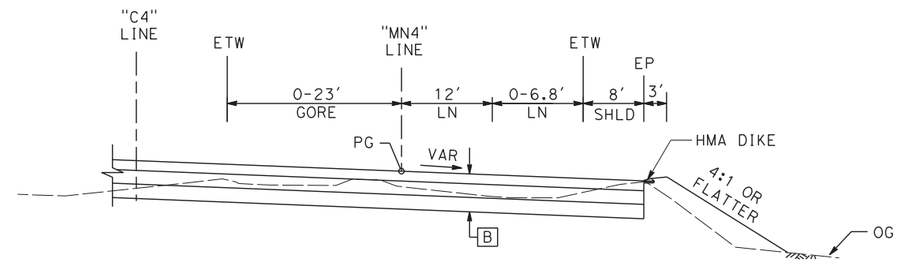

"MN4" 132+27 TO 134+18

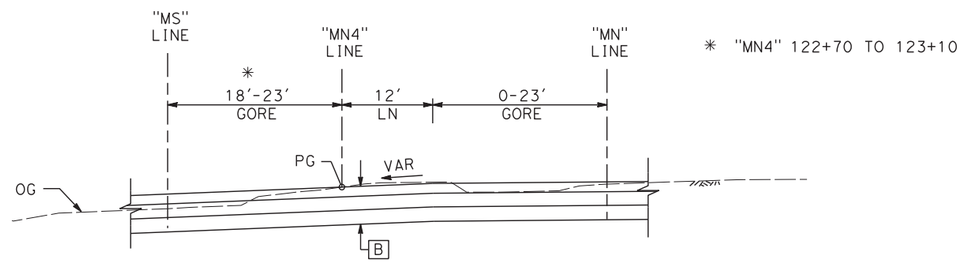

"MN4" 122+70 TO 123+62

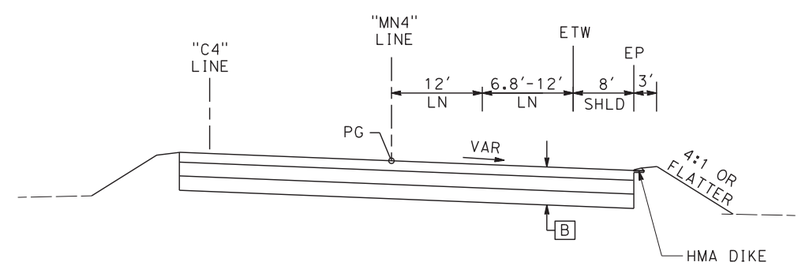

"MN4" 134+18 TO 134+97

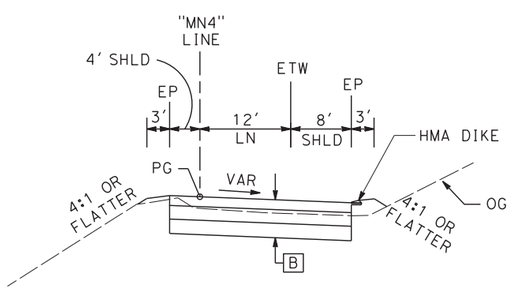

"MN4" 123+62 TO 132+27

MN4 LINE
GOLDEN STATE BLVD NB OFF RAMP

REV	DATE	BY	CHK	APP	DESCRIPTION

DESIGNED BY G. MANOREK
DRAWN BY B. CHAN
CHECKED BY L. HEUSTON
IN CHARGE F. NOBARI
DATE 11/22/11

PROPOSED PRELIMINARY DESIGN

NOT FOR CONSTRUCTION

AECOM Technical Services, Inc.
2020 L Street, Suite 300
Sacramento, CA 95811
CH2MHILL

CALIFORNIA HIGH-SPEED RAIL AUTHORITY

CALIFORNIA HIGH-SPEED TRAIN PROJECT
SIERRA SUBDIVISION
PACKAGE 1A
ROADWAY
TYPICAL SECTIONS
SR 99 - RAMP "MN4"

CONTRACT NO.
DRAWING NO. CV-R0017-R99
SCALE AS SHOWN
SHEET NO.

ychiu 11/16/2011 3:35:04 PM CAHSRP-R1.TBL CHSR_half_black.plt C:\Documents and Settings\ychiu\My Documents\NDMProj\356751 - California High Speed Rail - SR99 Improvements\MF-CV-R3017-R99.dgn

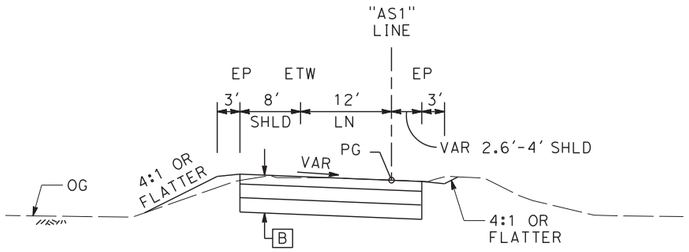

"AS1" 238+39 TO 239+48

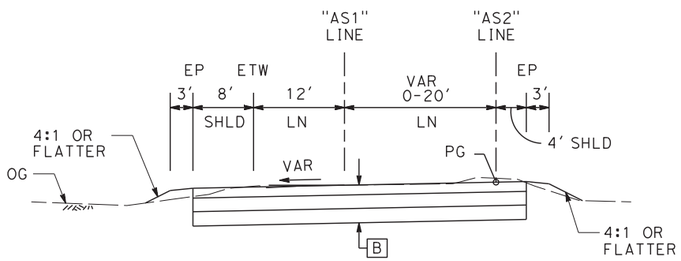

"AS1" 239+48 TO 240+47

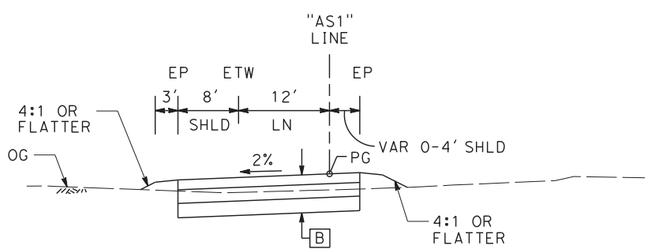

"AS1" 240+47 TO 242+38

AS1 LINE
SB ON RAMP AT ASHLAN AVE

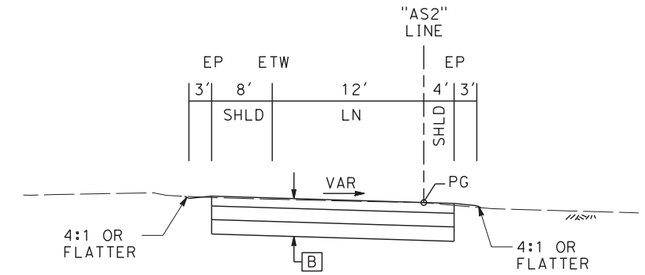

"AS2" 240+40 TO 241+01

AS2 LINE
SB ON RAMP AT ASHLAN AVE

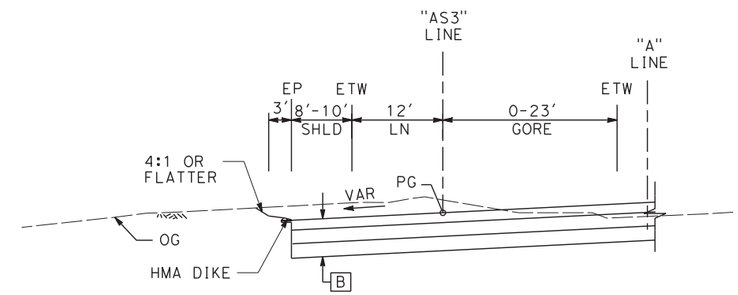

"AS3" 219+06 TO 225+34

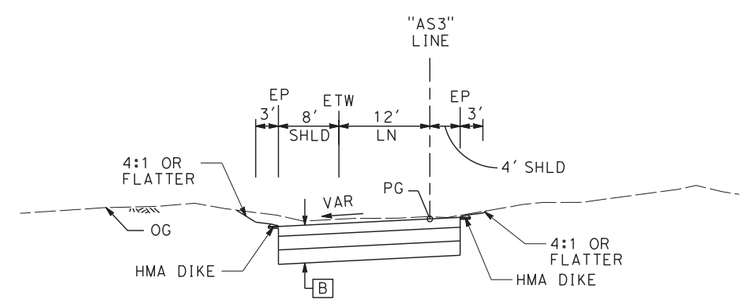

"AS3" 225+34 TO 233+28

AS3 LINE
SB ON RAMP AT ASHLAN AVE

REV	DATE	BY	CHK	APP	DESCRIPTION

DESIGNED BY G. MANOREK
DRAWN BY B. CHAN
CHECKED BY L. HEUSTON
IN CHARGE F. NOBARI
DATE 11/22/11

PROPOSED PRELIMINARY DESIGN

NOT FOR CONSTRUCTION

AECOM Technical Services, Inc.
2020 L Street, Suite 300
Sacramento, CA 95811
CH2MHILL

CALIFORNIA HIGH-SPEED RAIL AUTHORITY

CALIFORNIA HIGH-SPEED TRAIN PROJECT
SIERRA SUBDIVISION
PACKAGE 1A
ROADWAY
TYPICAL SECTIONS
SR 99 - RAMP "AS1", "AS2", "AS3"

CONTRACT NO.
DRAWING NO. CV-R0018-R99
SCALE AS SHOWN
SHEET NO.

ychiu 11/16/2011 3:35:11 PM CAHSRP-R1.TBL CHSR_half_black.plt C:\Documents and Settings\ychiu\My Documents\NDMProj\356751 - California High Speed Rail - SR99 Improvements\MF-CV-R3018-R99.dgn

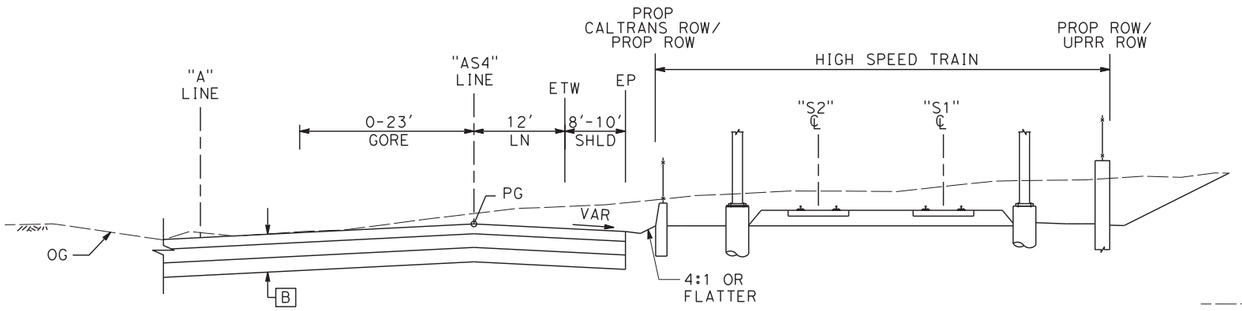

"AS4" 221+20 TO 223+87

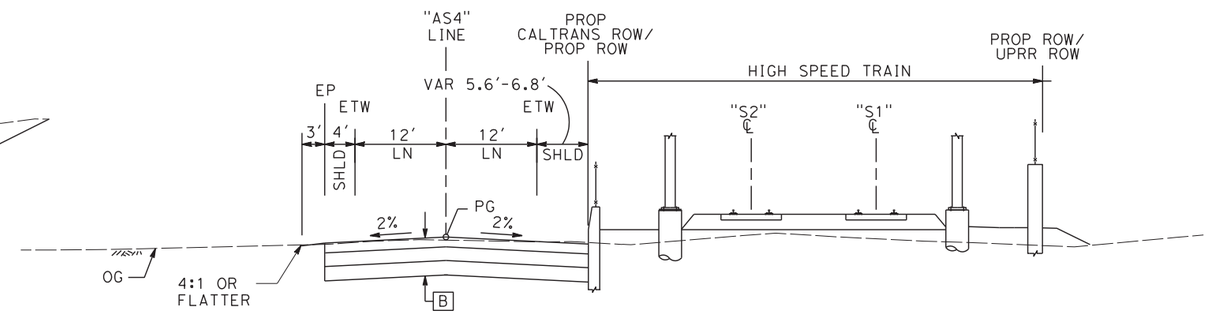

"AS4" 233+50 TO 235+00

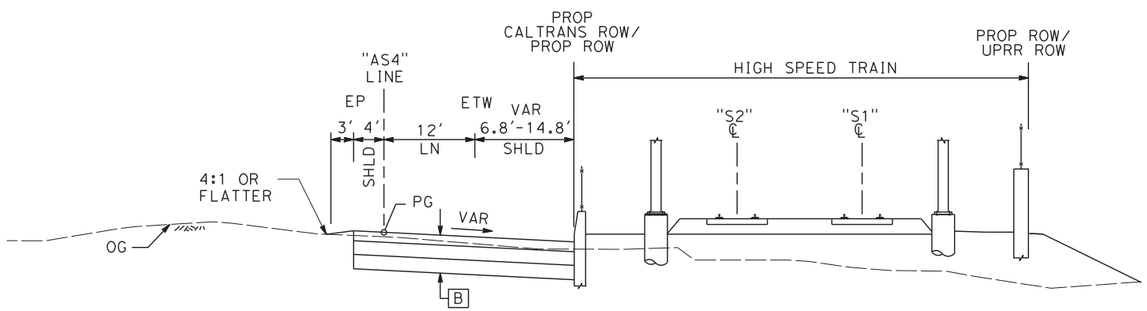

"AS4" 223+87 TO 233+50

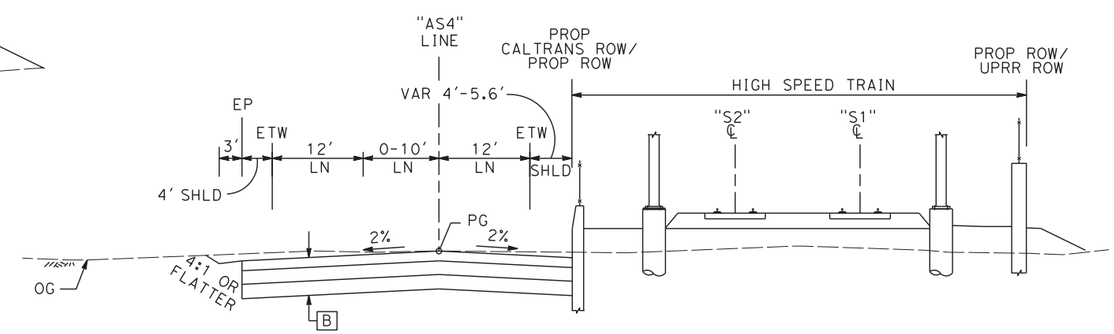

"AS4" 235+00 TO 237+72

AS4 LINE
NB OFF RAMP AT ASHLAN AVE

REV	DATE	BY	CHK	APP	DESCRIPTION

DESIGNED BY G. MANOREK
DRAWN BY B. CHAN
CHECKED BY L. HEUSTON
IN CHARGE F. NOBARI
DATE 11/22/11

PROPOSED PRELIMINARY DESIGN

NOT FOR CONSTRUCTION

AECOM Technical Services, Inc.
2020 L Street, Suite 300
Sacramento, CA 95811
CH2MHILL

CALIFORNIA HIGH-SPEED RAIL AUTHORITY

CALIFORNIA HIGH-SPEED TRAIN PROJECT
SIERRA SUBDIVISION
PACKAGE 1A
ROADWAY
TYPICAL SECTIONS
SR 99 - RAMP "AS4"

CONTRACT NO.
DRAWING NO. CV-R0019-R99
SCALE AS SHOWN
SHEET NO.

ychiu 11/16/2011 3:35:19 PM CAHSRP-R1.TBL CHSR_half_black.plt C:\Documents and Settings\ychiu\My Documents\NDMProj\356751 - California High Speed Rail - SR99 Improvements\MF-CV-R3019-R99.dgn

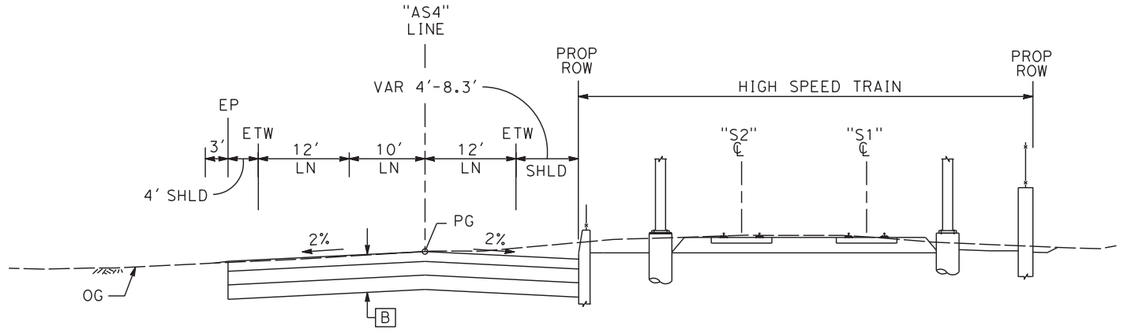

"AS4" 237+72 TO 243+78

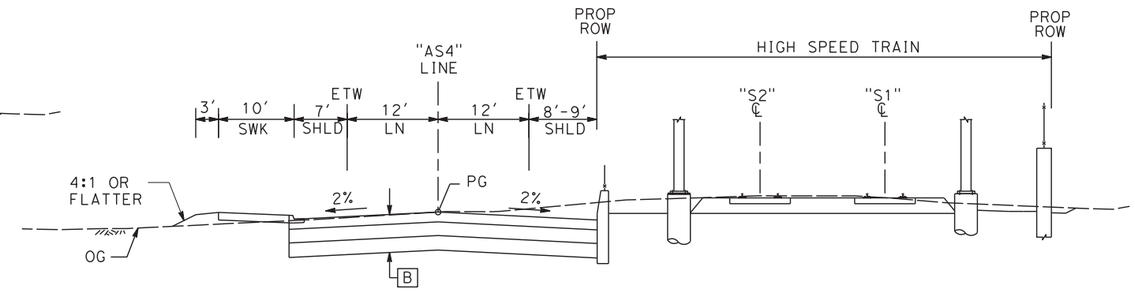

"AS4" 247+50 TO 248+00

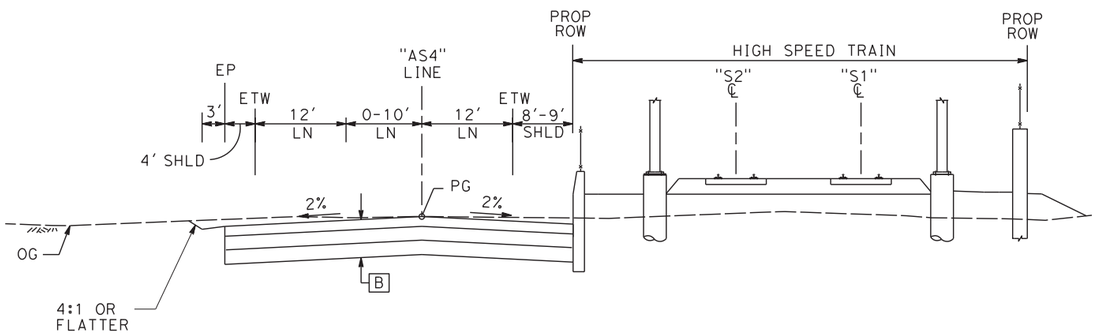

"AS4" 243+78 TO 245+19

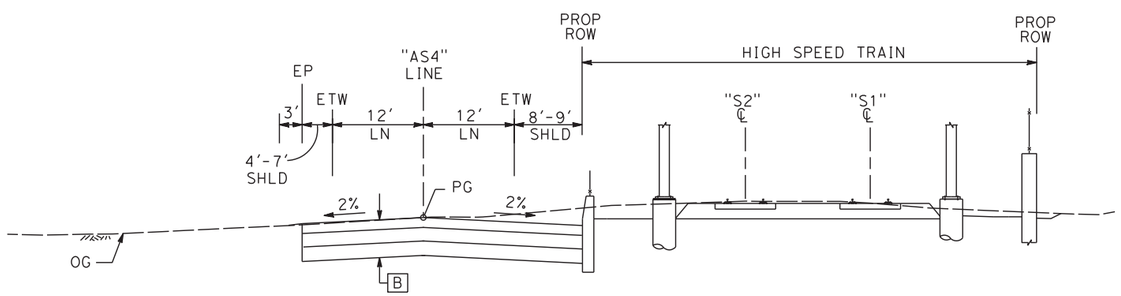

"AS4" 245+19 TO 247+50

AS4 LINE
NB OFF RAMP AT ASHLAN AVE

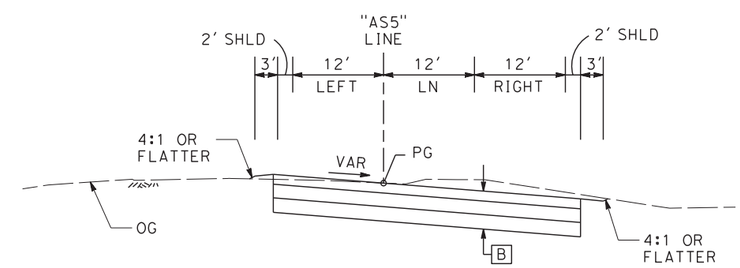

"AS5" 248+00 TO 250+66

AS5 LINE
NB OFF RAMP AT ASHLAN AVE

REV	DATE	BY	CHK	APP	DESCRIPTION

DESIGNED BY G. MANOREK
DRAWN BY B. CHAN
CHECKED BY L. HEUSTON
IN CHARGE F. NOBARI
DATE 11/22/11

PROPOSED PRELIMINARY DESIGN

NOT FOR CONSTRUCTION

AECOM Technical Services, Inc.
2020 L Street, Suite 300
Sacramento, CA 95811
CH2MHILL

CALIFORNIA HIGH-SPEED RAIL AUTHORITY

CALIFORNIA HIGH-SPEED TRAIN PROJECT
SIERRA SUBDIVISION
PACKAGE 1A
ROADWAY
TYPICAL SECTIONS
SR 99 - RAMP "AS4", "AS5"

CONTRACT NO.
DRAWING NO. CV-R0020-R99
SCALE AS SHOWN
SHEET NO.

ychiu 11/16/2011 3:35:26 PM CAHSRP-R1.TBL CHSR_half_black.plt C:\Documents and Settings\ychiu\My Documents\NDMProj\356751 - California High Speed Rail - SR99 Improvements\MF-CV-R3020-R99.dgn

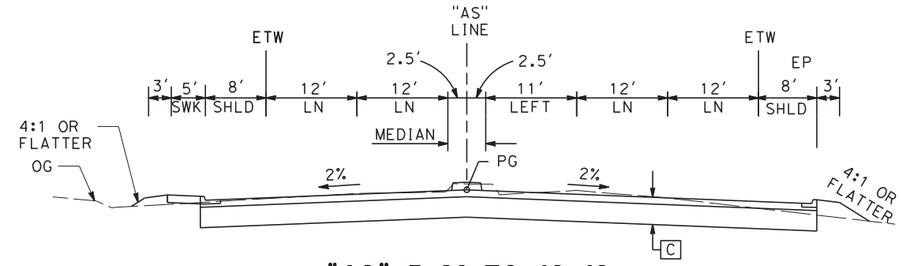

"AS" 7+30 TO 10+42

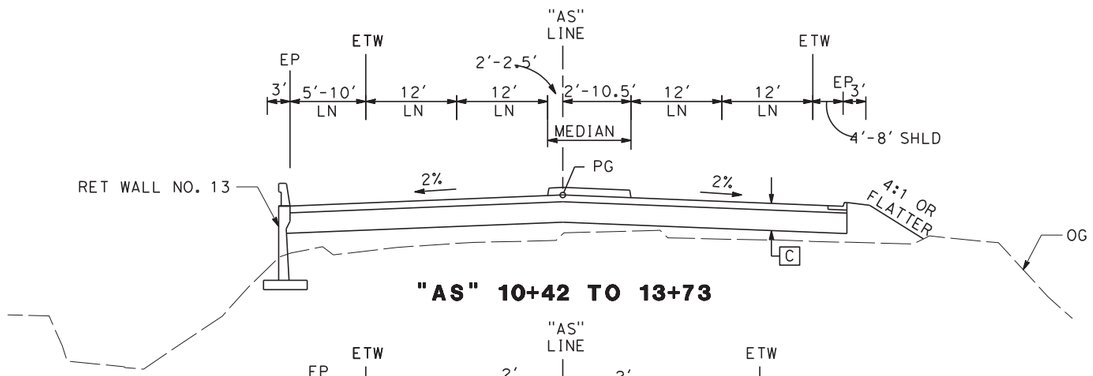

"AS" 10+42 TO 13+73

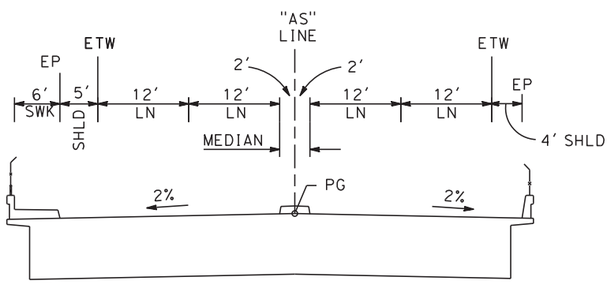

"AS" 13+73 TO 19+28
ASHLAN AVE OH

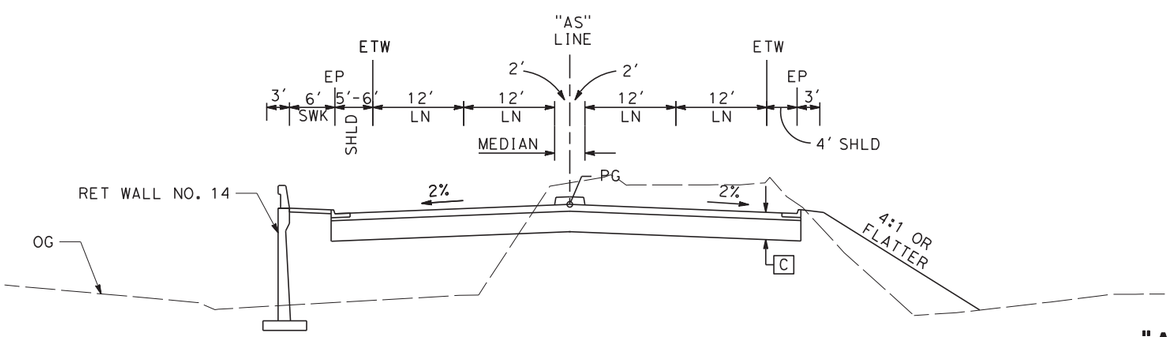

"AS" 19+28 TO 19+84

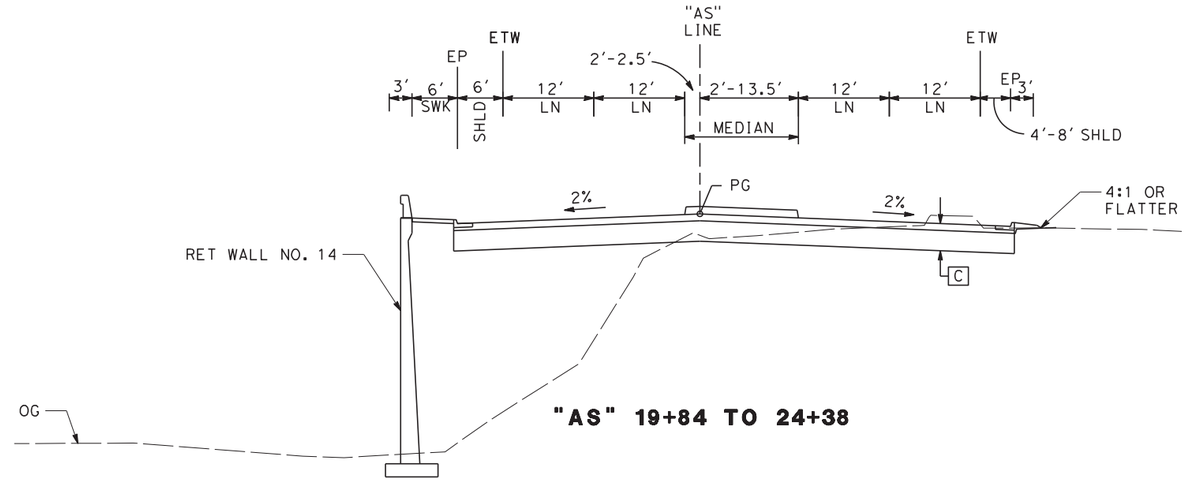

"AS" 19+84 TO 24+38

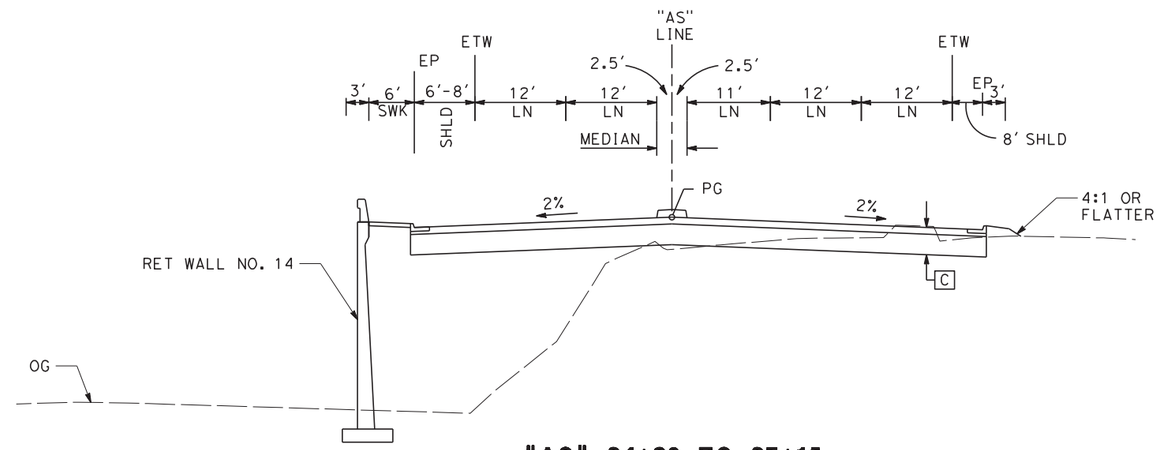

"AS" 24+38 TO 27+15

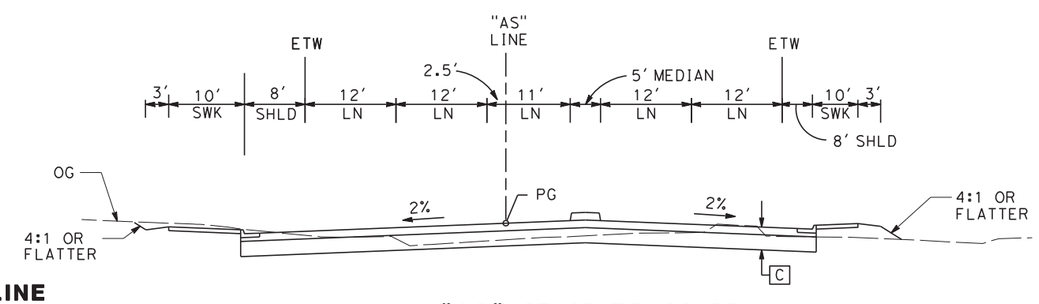

"AS" 27+15 TO 30+35

"AS" LINE
ASHLAN AVE

REV	DATE	BY	CHK	APP	DESCRIPTION

DESIGNED BY G. MANOREK
DRAWN BY B. CHAN
CHECKED BY L. HEUSTON
IN CHARGE F. NOBARI
DATE 2/17/12

PROPOSED PRELIMINARY DESIGN

NOT FOR CONSTRUCTION

AECOM Technical Services, Inc.
2020 L Street, Suite 300
Sacramento, CA 95811
CH2MHILL

CALIFORNIA HIGH-SPEED RAIL AUTHORITY

CALIFORNIA HIGH-SPEED TRAIN PROJECT
SIERRA SUBDIVISION
PACKAGE 1A
ROADWAY
TYPICAL SECTIONS
SR 99 - ASHLAN AVE

CONTRACT NO.
DRAWING NO. CV-R0021-R99
SCALE AS SHOWN
SHEET NO.

sleong 2/13/2012 2:26:31 PM CAHSRP-R1.TBL CHSR_half_black-pdf995.pc N:\Documents and Settings\sleong\My Documents\NDMProj\356751 - California High Speed Rail - SR99 Improvements\WF-CV-R3021-R99_OPTIO

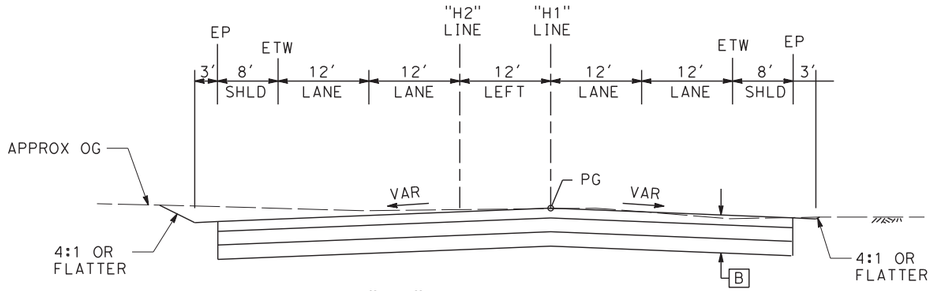

"H1" 100+00 TO 100+11

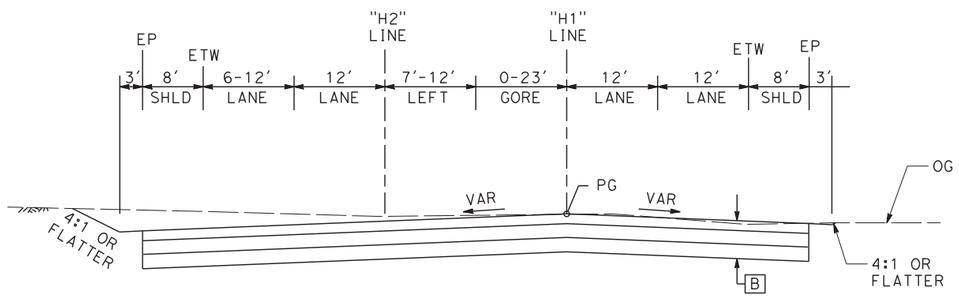

"H1" 100+11 TO 101+89

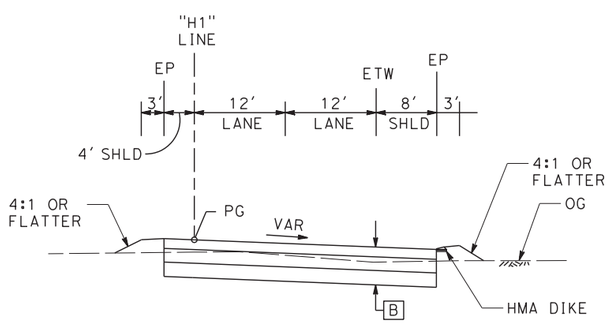

"H1" 101+89 TO 115+27

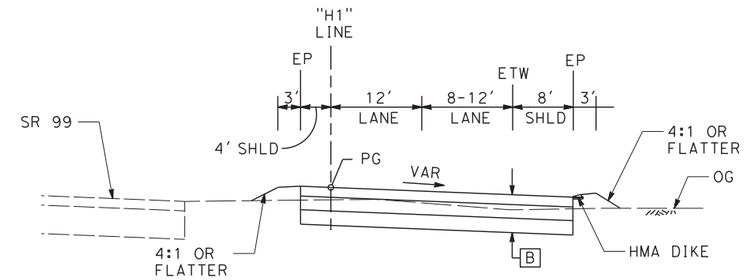

"H1" 115+27 TO 117+08

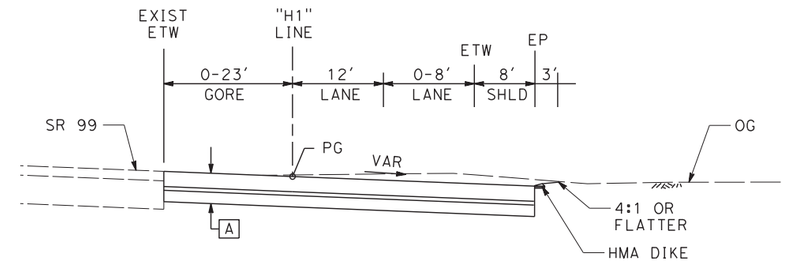

"H1" 117+08 TO 124+27

H1 LINE
NB ON RAMP AT HERNDON AVE

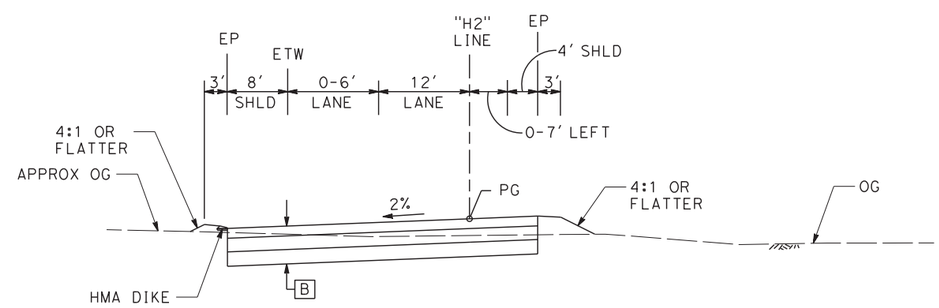

"H2" 101+95 TO 104+51

H2 LINE
SB OFF RAMP AT HERNDON AVE

REV	DATE	BY	CHK	APP	DESCRIPTION

DESIGNED BY G. MANOREK
DRAWN BY B. CHAN
CHECKED BY L. HEUSTON
IN CHARGE F. NOBARI
DATE 11/22/11

PROPOSED PRELIMINARY DESIGN

NOT FOR CONSTRUCTION

AECOM Technical Services, Inc.
2020 L Street, Suite 300
Sacramento, CA 95811
CH2MHILL

CALIFORNIA HIGH-SPEED RAIL AUTHORITY

CALIFORNIA HIGH-SPEED TRAIN PROJECT
SIERRA SUBDIVISION
PACKAGE 1A
ROADWAY
TYPICAL SECTIONS
SR 99 - RAMP "H1", "H2"

CONTRACT NO.
DRAWING NO. CV-R0022-R99
SCALE AS SHOWN
SHEET NO.

ychiu 11/16/2011 3:35:49 PM CAHSRP-R1.TBL CHSR_half_black.plt C:\Documents and Settings\ychiu\My Documents\NDMProj\356751 - California High Speed Rail - SR99 Improvements\MF-CV-R3022-R99.dgn

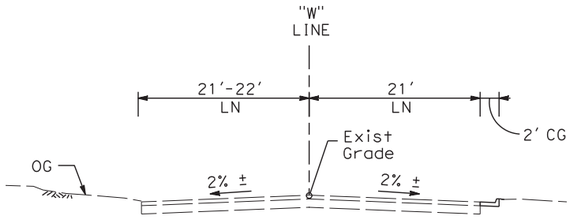

"W" 11+63 TO 12+40

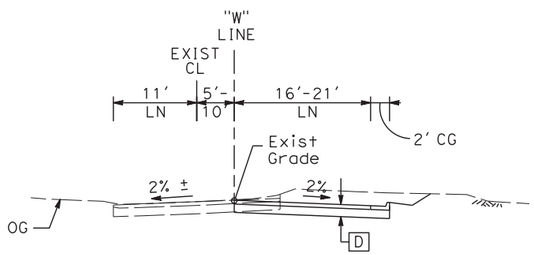

"W" 12+40 TO 14+65

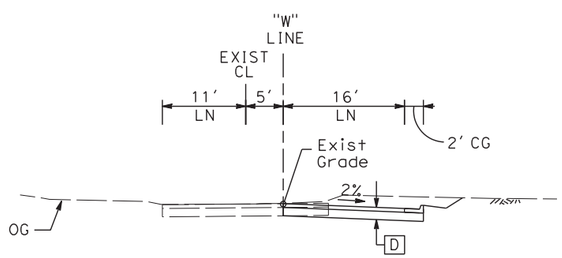

"W" 14+65 TO 16+78

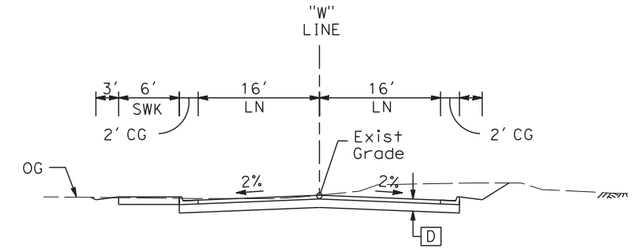

"W" 16+78 TO 17+46

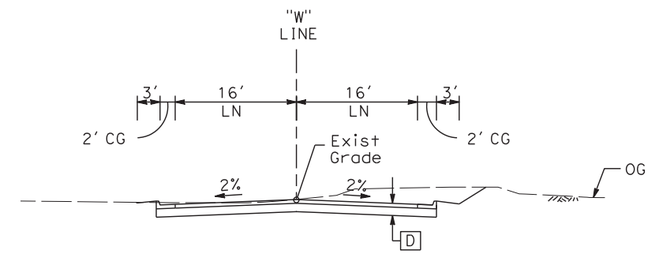

"W" 17+46 TO 19+14

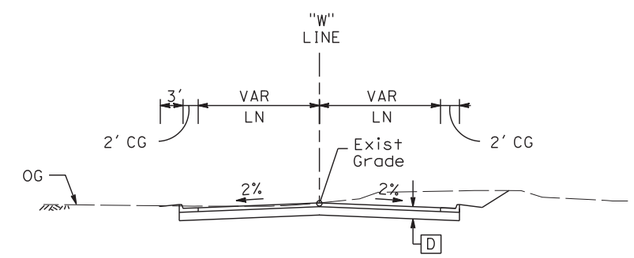

"W" 19+14 TO 19+75

"W"LINE
WOODSON AVE

REV	DATE	BY	CHK	APP	DESCRIPTION

DESIGNED BY G. MANOREK
DRAWN BY B. CHAN
CHECKED BY L. HEUSTON
IN CHARGE F. NOBARI
DATE 11/22/11

PROPOSED PRELIMINARY DESIGN

NOT FOR CONSTRUCTION

AECOM Technical Services, Inc.
2020 L Street, Suite 300
Sacramento, CA 95811
CH2MHILL

CALIFORNIA HIGH-SPEED RAIL AUTHORITY

CALIFORNIA HIGH-SPEED TRAIN PROJECT
SIERRA SUBDIVISION
PACKAGE 1A
ROADWAY
TYPICAL SECTIONS
SR 99 - LOCAL ROAD "W"

CONTRACT NO.
DRAWING NO. CV-R0023-R99
SCALE AS SHOWN
SHEET NO.

ychiu 11/16/2011 3:35:57 PM CAHSRP-R1.TBL CHSR_half_black.plt C:\Documents and Settings\ychiu\My Documents\NDMProj\356751 - California High Speed Rail - SR99 Improvements\MF-CV-R3023-R99.dgn

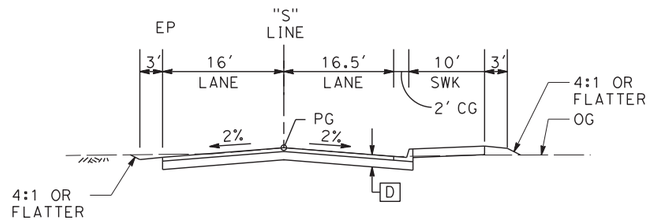

"S" 10+00 TO 14+82

S LINE
SHIELDS AVE

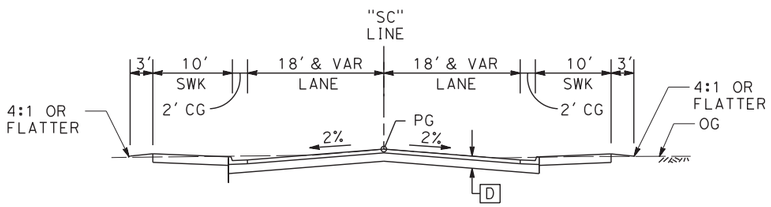

"SC" 10+00 TO 11+66

SC LINE

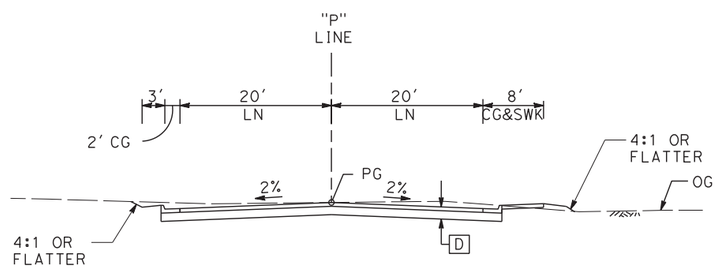

"P" 11+00 TO 20+30

P LINE
PLEASANT AVE

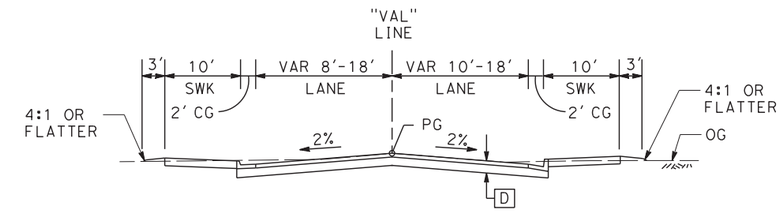

"VAL" 20+36 TO 22+51
"VAL" 31+17 TO 34+16

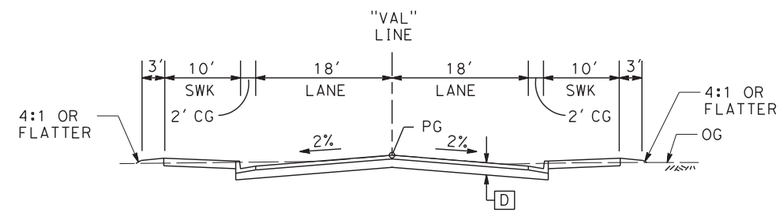

"VAL" 22+51 TO 31+17

VAL LINE
VALENTINE AVE

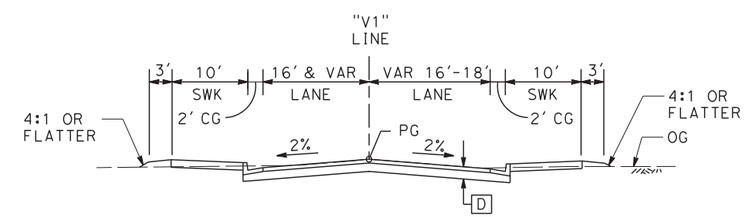

"V1" 10+00 TO 14+47

V1 LINE
NORTH PARKWAY DR

REV	DATE	BY	CHK	APP	DESCRIPTION

DESIGNED BY G. MANOREK
DRAWN BY B. CHAN
CHECKED BY L. HEUSTON
IN CHARGE F. NOBARI
DATE 11/22/11

PROPOSED PRELIMINARY DESIGN

NOT FOR CONSTRUCTION

AECOM Technical Services, Inc.
2020 L Street, Suite 300
Sacramento, CA 95811
CH2MHILL

CALIFORNIA HIGH-SPEED RAIL AUTHORITY

CALIFORNIA HIGH-SPEED TRAIN PROJECT
SIERRA SUBDIVISION
PACKAGE 1A
ROADWAY
TYPICAL SECTIONS
SR 99 - LOCAL ROAD "S", "SC", "P", "VAL", "V1"

CONTRACT NO.
DRAWING NO. CV-R0024-R99
SCALE AS SHOWN
SHEET NO.

11/16/2011 3:36:05 PM CAHSRP-R1.TBL CHSR_half_black.plt C:\Documents and Settings\ychiu\My Documents\NDMProj\356751 - California High Speed Rail - SR99 Improvements\MF-CV-R3024-R99.dgn
ychiu

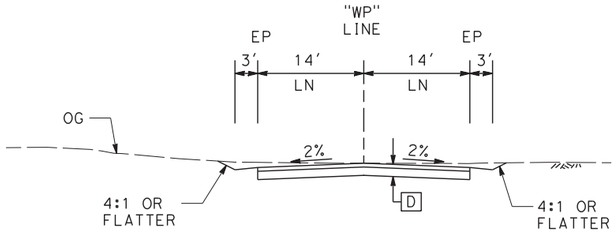

"WP" 8+91 TO 9+37

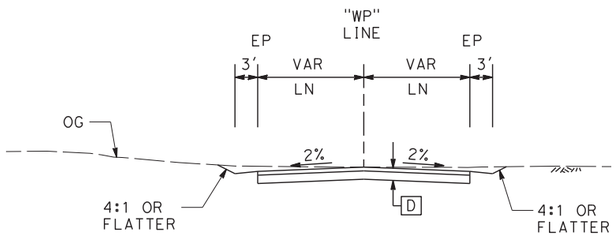

"WP" 9+37 TO 10+00

WP LINE
W PRINCETON AVE

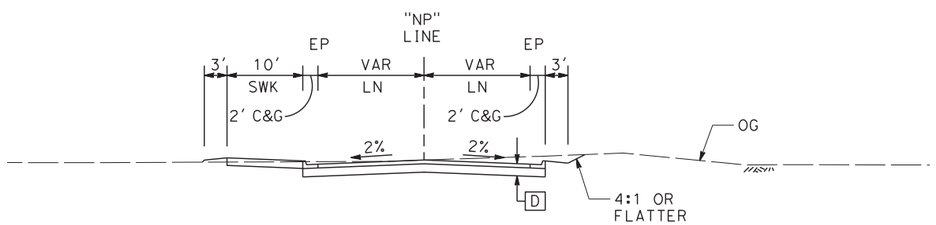

"NP" 10+00 TO 10+63

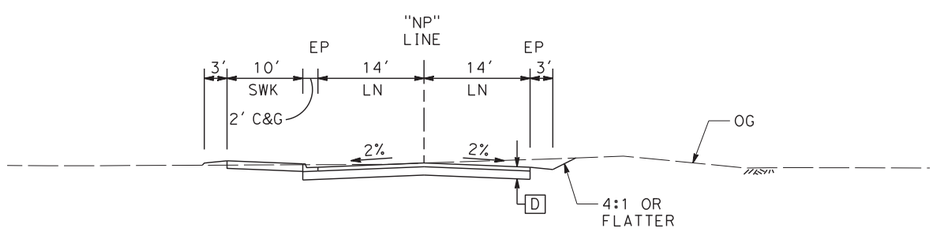

"NP" 10+63 TO 11+56

NP LINE
N PARKWAY DR

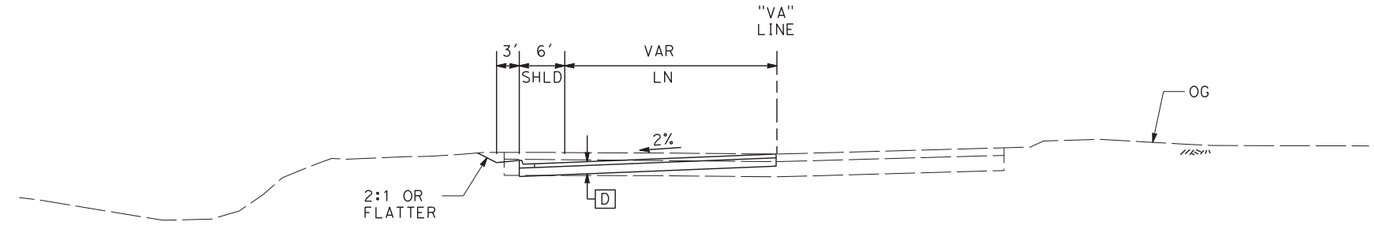

"VA" 10+00 TO 12+42

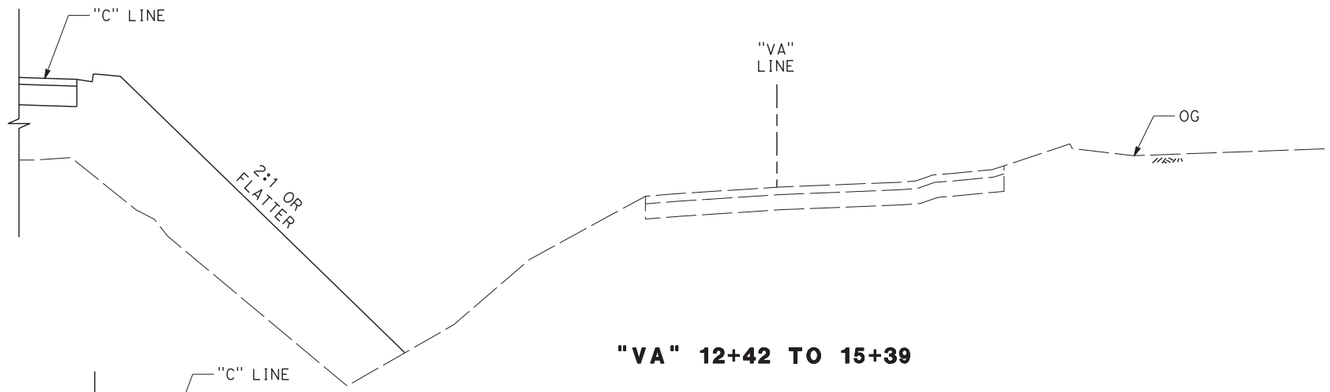

"VA" 12+42 TO 15+39

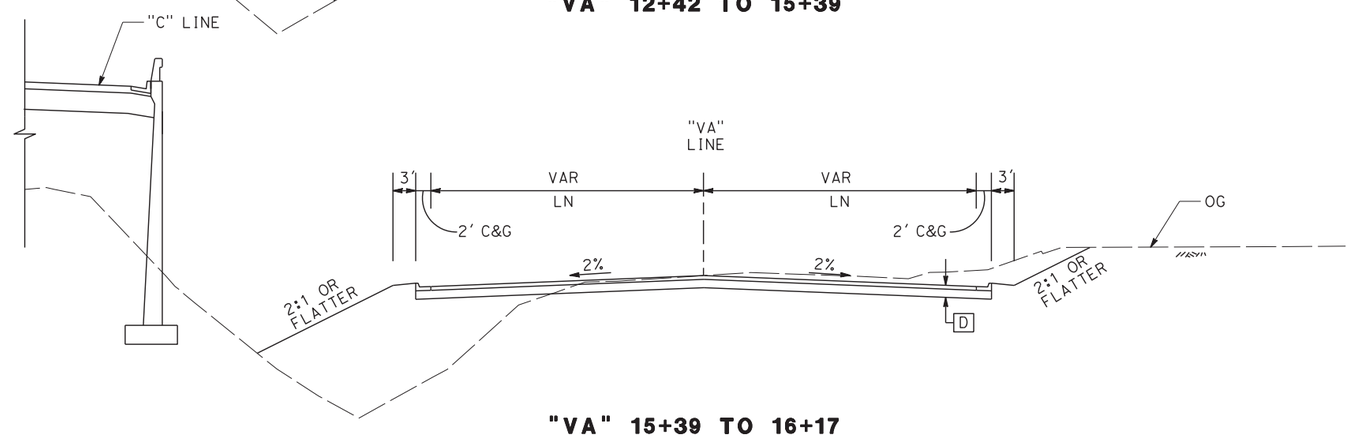

"VA" 15+39 TO 16+17

VA LINE
VASSAR AVE

REV	DATE	BY	CHK	APP	DESCRIPTION

DESIGNED BY G. MANOREK
DRAWN BY B. CHAN
CHECKED BY L. HEUSTON
IN CHARGE F. NOBARI
DATE 11/22/11

PROPOSED PRELIMINARY DESIGN

NOT FOR CONSTRUCTION

AECOM Technical Services, Inc.
2020 L Street, Suite 300
Sacramento, CA 95811

CH2MHILL

CALIFORNIA HIGH-SPEED RAIL AUTHORITY

CALIFORNIA HIGH-SPEED TRAIN PROJECT
SIERRA SUBDIVISION
PACKAGE 1A
ROADWAY
TYPICAL SECTIONS
SR 99 - LOCAL ROAD "WP", "NP", "VA"

CONTRACT NO.
DRAWING NO. CV-R0025-R99
SCALE AS SHOWN
SHEET NO.

ychiu 11/16/2011 3:31:45 PM CAHSRP-R1.TBL CHSR_half_black.plt C:\Documents and Settings\ychiu\My Documents\NDMProj\356751 - California High Speed Rail - SR99 Improvements\MF-CV-R3025-R99.dgn

LEGEND:

- TRAFFIC DIRECTION
- (NO.) TRAFFIC STRIPE DETAIL NUMBER
- BEGIN/END OF TRAFFIC STRIPE DETAIL
- CHANGE OF TRAFFIC STRIPE DETAIL
- TYPE I (24') ARROW
- TYPE II ARROW
- TYPE III ARROW
- TYPE V ARROW
- TYPE VI ARROW
- (NO.) ROADSIDE SIGN NUMBER
- (NO.) OVERHEAD SIGN STRUCTURE NUMBER
- ROADSIDE SIGN ONE-POST
- ROADSIDE SIGN TWO-POST
- <CA> CALIFORNIA SIGN CODE
- (OH) OVERHEAD SIGN STRUCTURE
- (BM) BARRIER MOUNTED

NOTES:

1. ROW SHOWN REPRESENTS THE MINIMUM ANTICIPATED ROW REQUIREMENTS. ACCURATE ROW AND ACCESS DATA WILL BE MADE AVAILABLE PRIOR TO NOTICE TO PROCEED.
2. FEDERAL SIGN CODES ARE SHOWN UNLESS DESIGNATED BY <CA> WHICH INDICATES A CALIFORNIA SIGN CODE.
3. EXISTING SIGNS THAT ARE IN CONFLICT WITH PROPOSED SIGNS SHALL BE REMOVED.

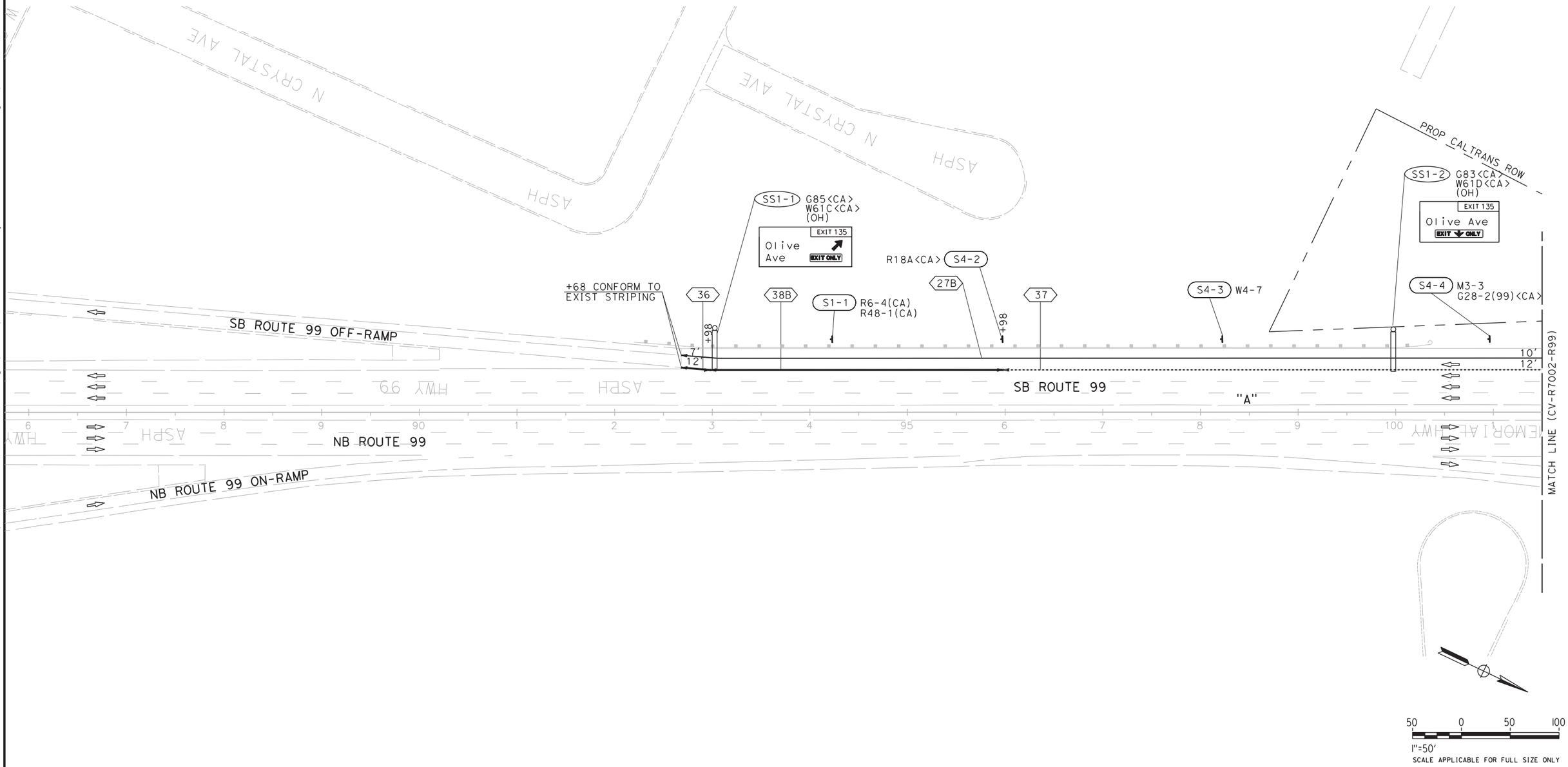

REV	DATE	BY	CHK	APP	DESCRIPTION

DESIGNED BY G. MANOREK
DRAWN BY C. CHIU
CHECKED BY L. HEUSTON
IN CHARGE F. NOBARI
DATE 11/22/11

PROPOSED PRELIMINARY DESIGN

NOT FOR CONSTRUCTION

AECOM Technical Services, Inc.
2020 L Street, Suite 300
Sacramento, CA 95811
CH2MHILL

CALIFORNIA HIGH-SPEED RAIL AUTHORITY

CALIFORNIA HIGH-SPEED TRAIN PROJECT
SIERRA SUBDIVISION
PACKAGE 1A
ROADWAY
PAVEMENT DELINEATION AND SIGNING
SR 99 RE-ALIGNMENT

CONTRACT NO.
DRAWING NO. CV-R7001-R99
SCALE AS SHOWN
SHEET NO.

ychiu 11/16/2011 12:59:41 AM CAHSRP-r1.tbl CHSR_half_black.plt C:\Documents and Settings\ychiu\My Documents\NDMProj\356751 - California High Speed Rail - SR99 Improvements\15-CV-R7001-R99.dgn

11/16/2011 11:00:33 AM CAHSRP-r1.tbl CHSR_half_black.plt C:\Documents and Settings\ychiu\My Documents\NDMProj\356751 - California High Speed Rail - SR99 Improvements\15-CV-R7002-R99.dgn
ychiu

NOTES:

1. ROW SHOWN REPRESENTS THE MINIMUM ANTICIPATED ROW REQUIREMENTS. ACCURATE ROW AND ACCESS DATA WILL BE MADE AVAILABLE PRIOR TO NOTICE TO PROCEED.

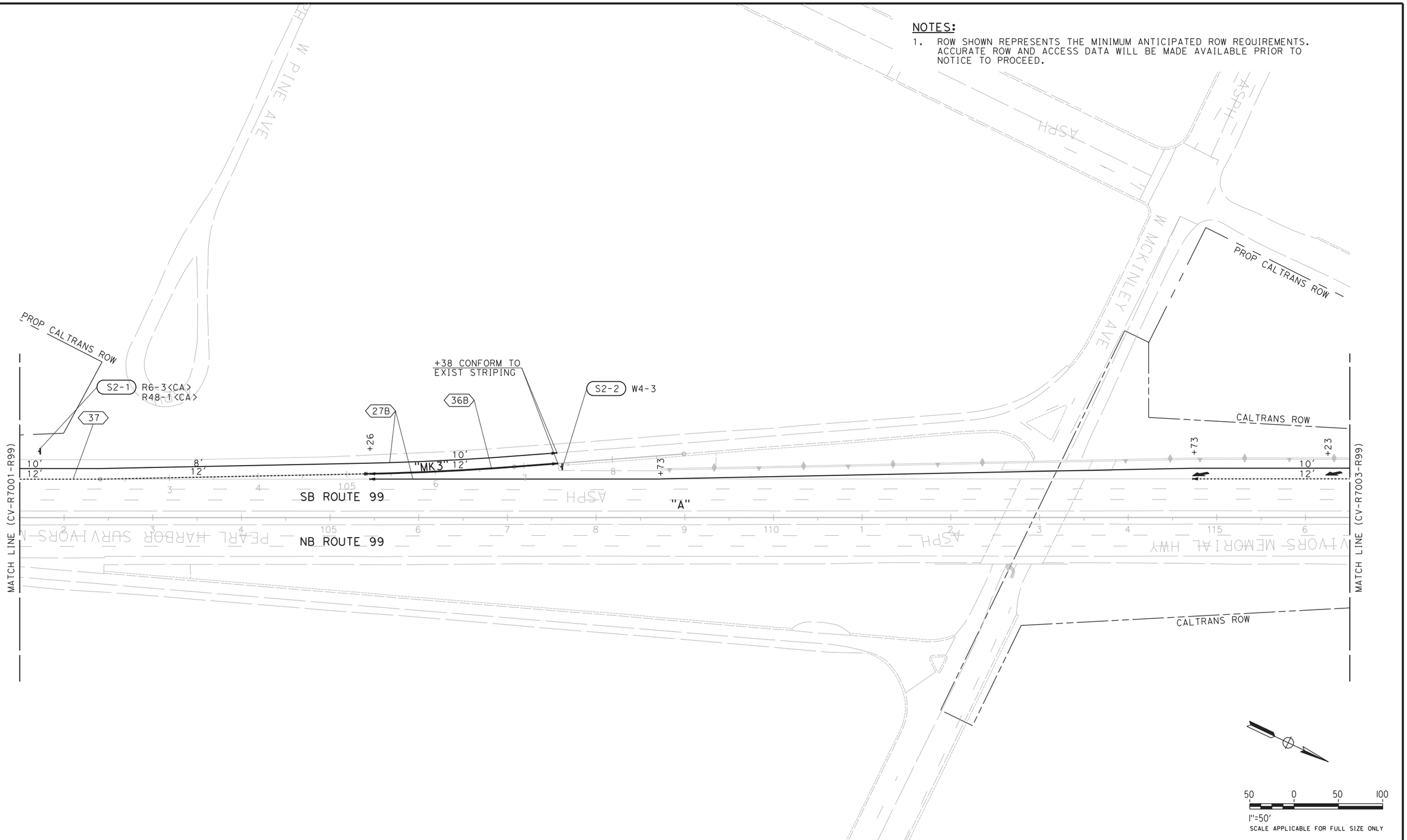

REV	DATE	BY	CHK	APP	DESCRIPTION

DESIGNED BY G. MANOREK
DRAWN BY C. CHIU
CHECKED BY L. HEUSTON
IN CHARGE F. NOBARI
DATE 11/22/11

PROPOSED PRELIMINARY DESIGN

NOT FOR CONSTRUCTION

AECOM Technical Services, Inc.
2020 L Street, Suite 300
Sacramento, CA 95811
CH2MHILL

CALIFORNIA HIGH-SPEED RAIL AUTHORITY

CALIFORNIA HIGH-SPEED TRAIN PROJECT
SIERRA SUBDIVISION
PACKAGE 1A
ROADWAY
PAVEMENT DELINEATION AND SIGNING
SR 99 RE-ALIGNMENT

CONTRACT NO.
DRAWING NO. CV-R7002-R99
SCALE AS SHOWN
SHEET NO.

2/16/2012 1:26:41 PM CAHSRP-R1.TBL CHSR_half_black-pdf995.prt C:\Documents and Settings\sleong\My Documents\NDMProj\356751 - California High Speed Rail - SR99 Improvements\1S-CV-R7003-R99_OPTIO
sleong

NOTES:

1. ROW SHOWN REPRESENTS THE MINIMUM ANTICIPATED ROW REQUIREMENTS. ACCURATE ROW AND ACCESS DATA WILL BE MADE AVAILABLE PRIOR TO NOTICE TO PROCEED.
2. SEE DRAWING NO. CV-R7016-R99 FOR WOODSON AND PLEASANT AVE

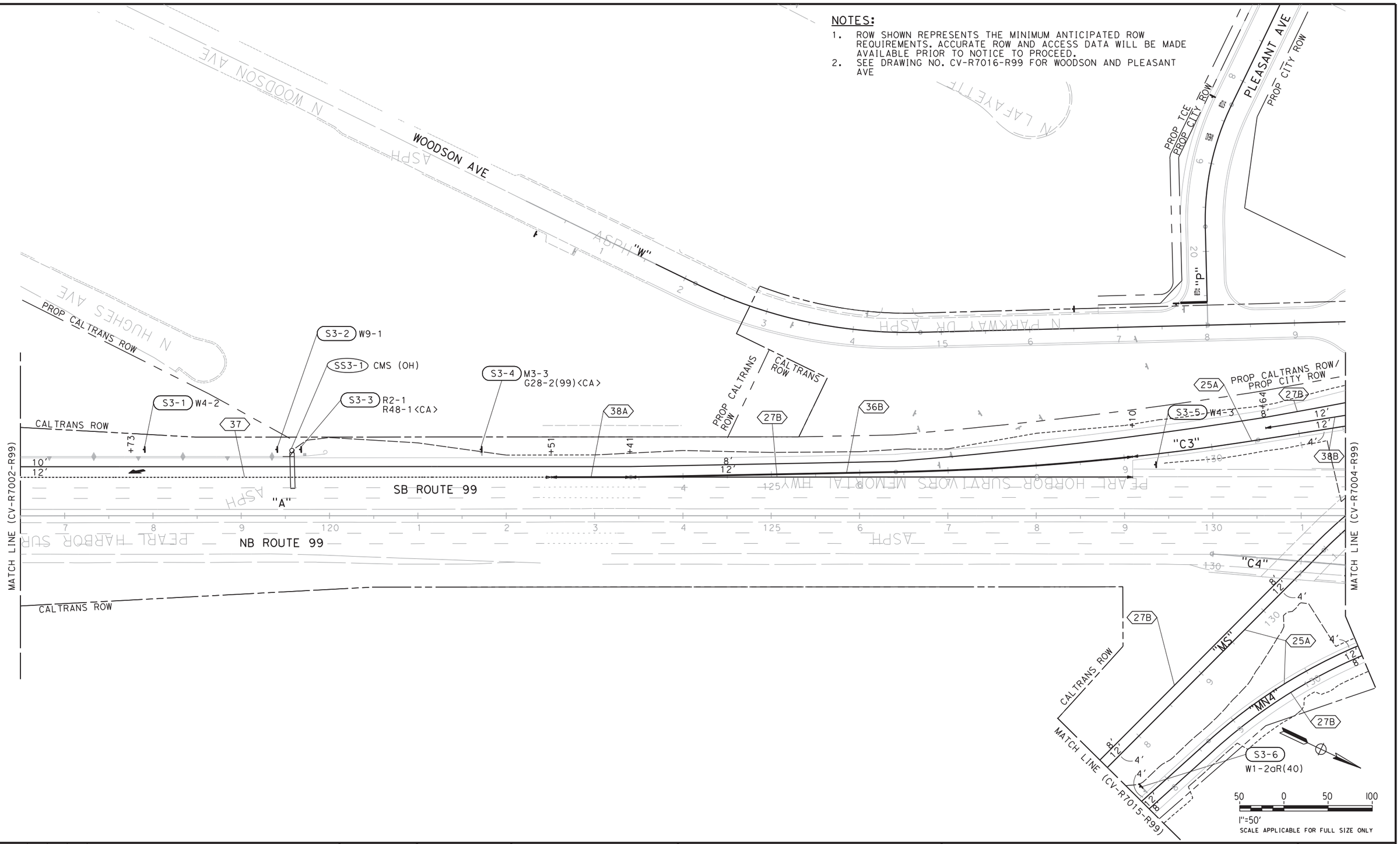

REV	DATE	BY	CHK	APP	DESCRIPTION

DESIGNED BY G. MANOREK
DRAWN BY C. CHIU
CHECKED BY L. HEUSTON
IN CHARGE F. NOBARI
DATE 2/17/12

PROPOSED PRELIMINARY DESIGN

NOT FOR CONSTRUCTION

AECOM Technical Services, Inc.
2020 L Street, Suite 300
Sacramento, CA 95811

CH2MHILL

CALIFORNIA HIGH-SPEED RAIL AUTHORITY

CALIFORNIA HIGH-SPEED TRAIN PROJECT
SIERRA SUBDIVISION
PACKAGE 1A
ROADWAY
PAVEMENT DELINEATION AND SIGNING
SR 99 RE-ALIGNMENT

CONTRACT NO.
DRAWING NO. CV-R7003-R99
SCALE AS SHOWN
SHEET NO.

NOTES:

1. ROW SHOWN REPRESENTS THE MINIMUM ANTICIPATED ROW REQUIREMENTS. ACCURATE ROW AND ACCESS DATA WILL BE MADE AVAILABLE PRIOR TO NOTICE TO PROCEED.
2. SEE SHEETS CV-R7012-R99 AND CV-R7013-R99 FOR W CLINTON AVE

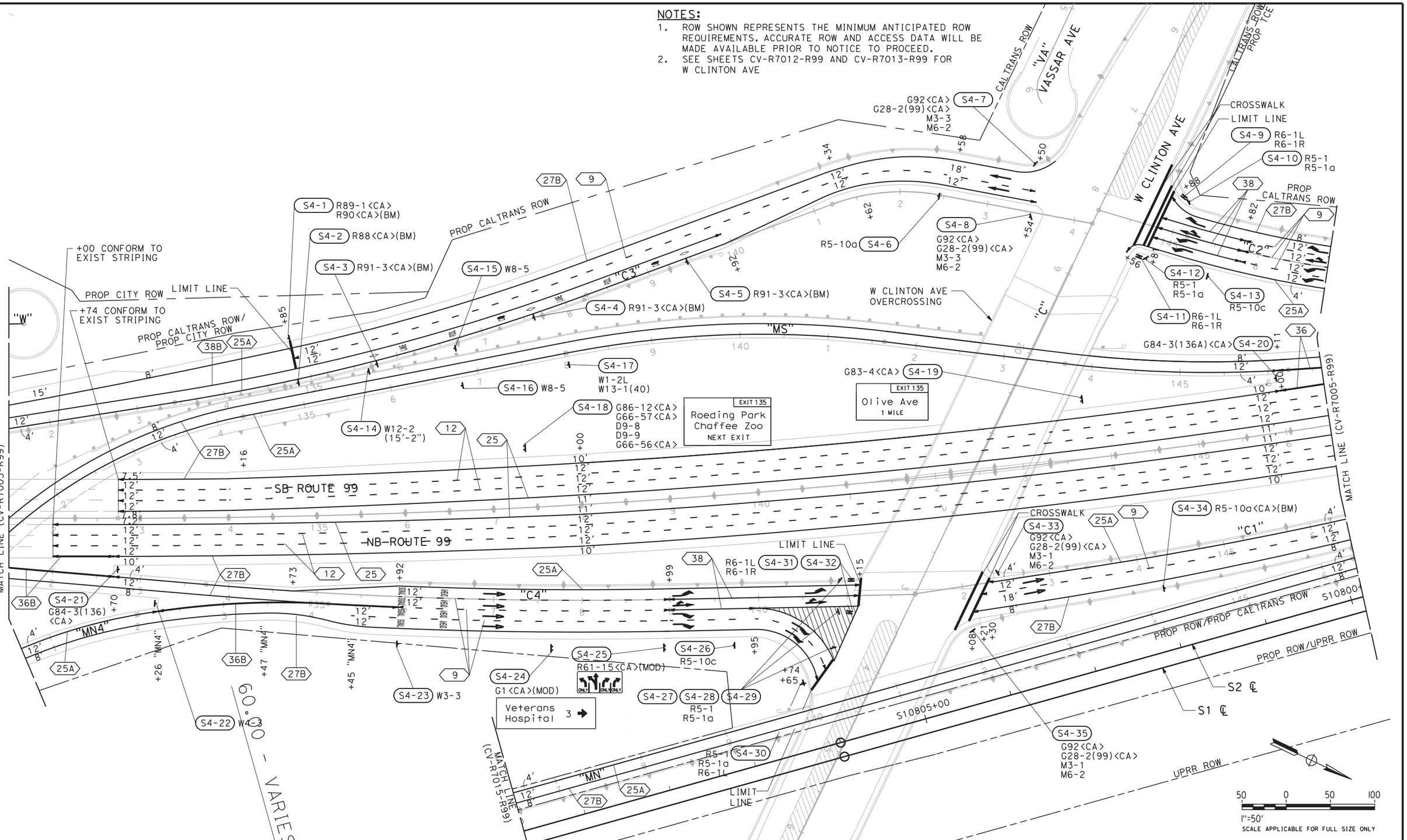

REV	DATE	BY	CHK	APP	DESCRIPTION

DESIGNED BY G. MANOREK
DRAWN BY C. CHIU
CHECKED BY L. HEUSTON
IN CHARGE F. NOBARI
DATE 2/17/12

PROPOSED PRELIMINARY DESIGN

NOT FOR CONSTRUCTION

AECOM Technical Services, Inc.
2020 L Street, Suite 300
Sacramento, CA 95811
CH2MHILL

CALIFORNIA HIGH-SPEED RAIL AUTHORITY

CALIFORNIA HIGH-SPEED TRAIN PROJECT
SIERRA SUBDIVISION
PACKAGE 1A
ROADWAY
PAVEMENT DELINEATION AND SIGNING
SR 99 RE-ALIGNMENT

CONTRACT NO.
DRAWING NO. CV-R7004-R99
SCALE AS SHOWN
SHEET NO.

2/16/2012 1:28:14 PM CAHSRP-R1.TBL CHSR_half_black-pdf995.pc3 C:\Documents and Settings\sleong\My Documents\NDMProj\356751 - California High Speed Rail - SR99 Improvements\1S-CV-R7004-R99_OPTIO
sleong

NOTES:

1. ROW SHOWN REPRESENTS THE MINIMUM ANTICIPATED ROW REQUIREMENTS. ACCURATE ROW AND ACCESS DATA WILL BE MADE AVAILABLE PRIOR TO NOTICE TO PROCEED.

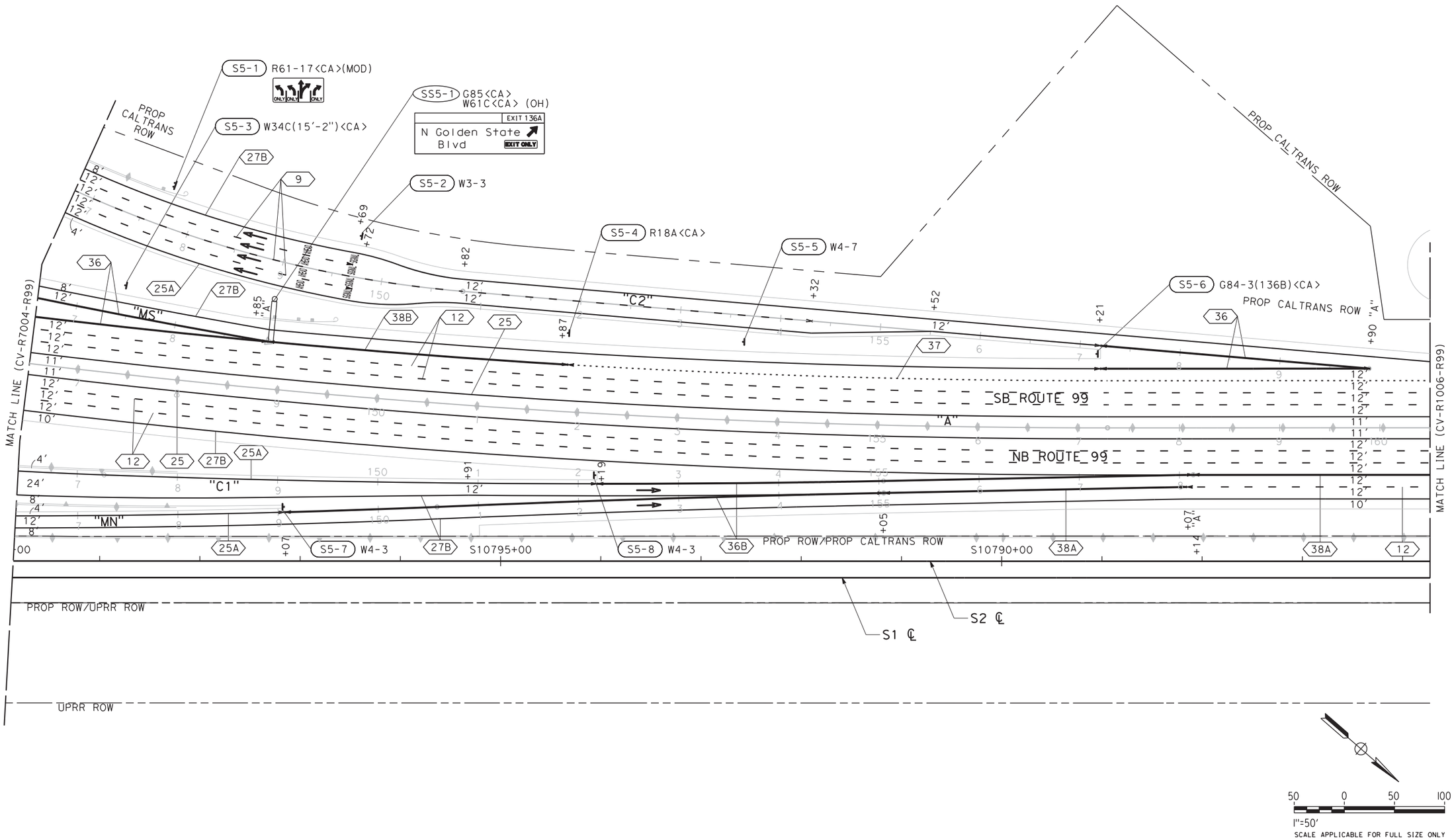

REV	DATE	BY	CHK	APP	DESCRIPTION

DESIGNED BY G. MANOREK
DRAWN BY C. CHIU
CHECKED BY L. HEUSTON
IN CHARGE F. NOBARI
DATE 11/22/11

PROPOSED PRELIMINARY DESIGN

NOT FOR CONSTRUCTION

AECOM Technical Services, Inc.
2020 L Street, Suite 300
Sacramento, CA 95811
CH2MHILL

CALIFORNIA HIGH-SPEED RAIL AUTHORITY

CALIFORNIA HIGH-SPEED TRAIN PROJECT
SIERRA SUBDIVISION
PACKAGE 1A
ROADWAY
PAVEMENT DELINEATION AND SIGNING
SR 99 RE-ALIGNMENT

CONTRACT NO.
DRAWING NO. CV-R7005-R99
SCALE AS SHOWN
SHEET NO.

ychiu 11/16/2011 11:02:10 AM CAHSRP-r1.tbl CHSR_half_black.plt C:\Documents and Settings\ychiu\My Documents\NDMProj\356751 - California High Speed Rail - SR99 Improvements\15-CV-R7005-R99.dgn

NOTES:

1. ROW SHOWN REPRESENTS THE MINIMUM ANTICIPATED ROW REQUIREMENTS. ACCURATE ROW AND ACCESS DATA WILL BE MADE AVAILABLE PRIOR TO NOTICE TO PROCEED.

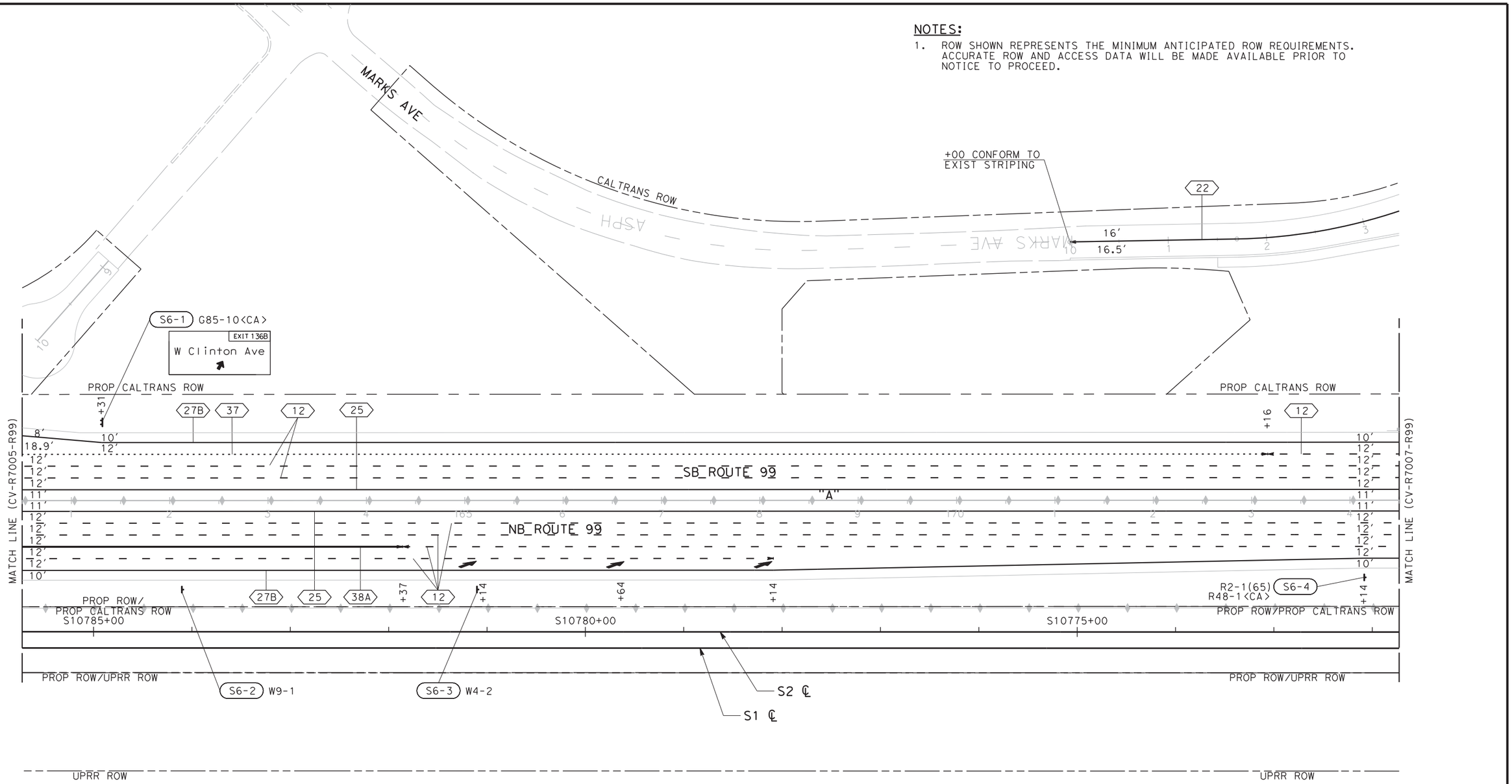

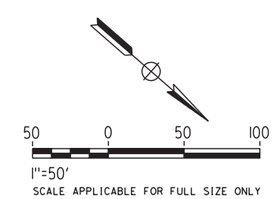

REV	DATE	BY	CHK	APP	DESCRIPTION

DESIGNED BY G. MANOREK
DRAWN BY C. CHIU
CHECKED BY L. HEUSTON
IN CHARGE F. NOBARI
DATE 11/22/11

PROPOSED PRELIMINARY DESIGN

NOT FOR CONSTRUCTION

AECOM Technical Services, Inc.
2020 L Street, Suite 300
Sacramento, CA 95811
CH2MHILL

CALIFORNIA HIGH-SPEED RAIL AUTHORITY

CALIFORNIA HIGH-SPEED TRAIN PROJECT
SIERRA SUBDIVISION
PACKAGE 1A
ROADWAY
PAVEMENT DELINEATION AND SIGNING
SR 99 RE-ALIGNMENT

CONTRACT NO.
DRAWING NO. CV-R7006-R99
SCALE AS SHOWN
SHEET NO.

ychiu 11/16/2011:02:39 AM CAHSRP-r1.tbl CHSR_half_black.plt C:\Documents and Settings\ychiu\My Documents\NDMProj\356751 - California High Speed Rail - SR99 Improvements\1S-CV-R7006-R99.dgn

NOTES:

1. ROW SHOWN REPRESENTS THE MINIMUM ANTICIPATED ROW REQUIREMENTS. ACCURATE ROW AND ACCESS DATA WILL BE MADE AVAILABLE PRIOR TO NOTICE TO PROCEED.

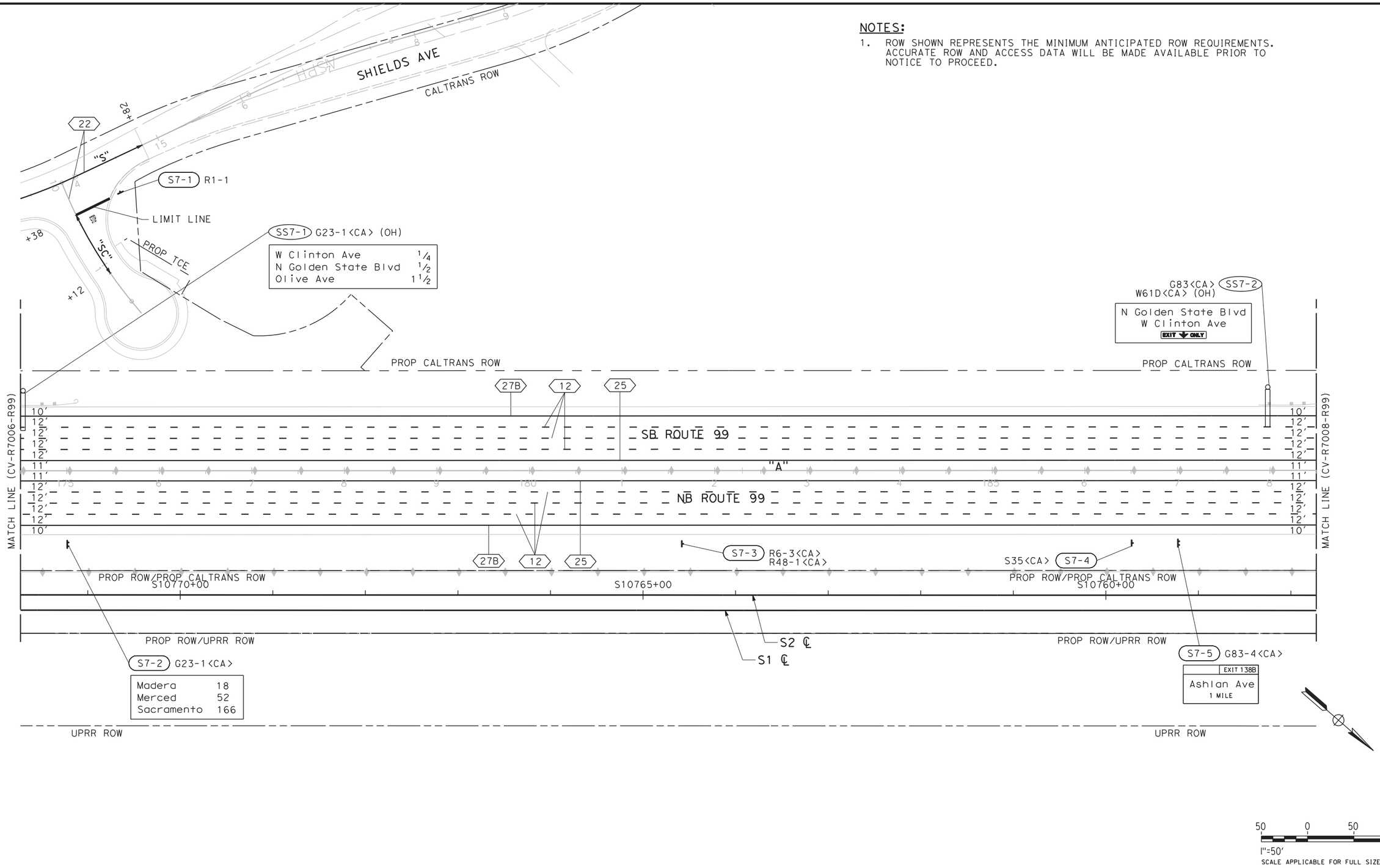

REV	DATE	BY	CHK	APP	DESCRIPTION

DESIGNED BY G. MANOREK
DRAWN BY C. CHIU
CHECKED BY L. HEUSTON
IN CHARGE F. NOBARI
DATE 11/22/11

PROPOSED PRELIMINARY DESIGN

NOT FOR CONSTRUCTION

AECOM Technical Services, Inc.
2020 L Street, Suite 300
Sacramento, CA 95811
CH2MHILL

CALIFORNIA HIGH-SPEED RAIL AUTHORITY

CALIFORNIA HIGH-SPEED TRAIN PROJECT
SIERRA SUBDIVISION
PACKAGE 1A
ROADWAY
PAVEMENT DELINEATION AND SIGNING
SR 99 RE-ALIGNMENT

CONTRACT NO.
DRAWING NO. CV-R7007-R99
SCALE AS SHOWN
SHEET NO.

ychiu 11/16/2011 11:03:15 AM CAHSRP-r1.tbl CHSR_half_black.plt C:\Documents and Settings\ychiu\My Documents\NDMProj\356751 - California High Speed Rail - SR99 Improvements\1S-CV-R7007-R99.dgn

NOTES:

1. ROW SHOWN REPRESENTS THE MINIMUM ANTICIPATED ROW REQUIREMENTS. ACCURATE ROW AND ACCESS DATA WILL BE MADE AVAILABLE PRIOR TO NOTICE TO PROCEED.

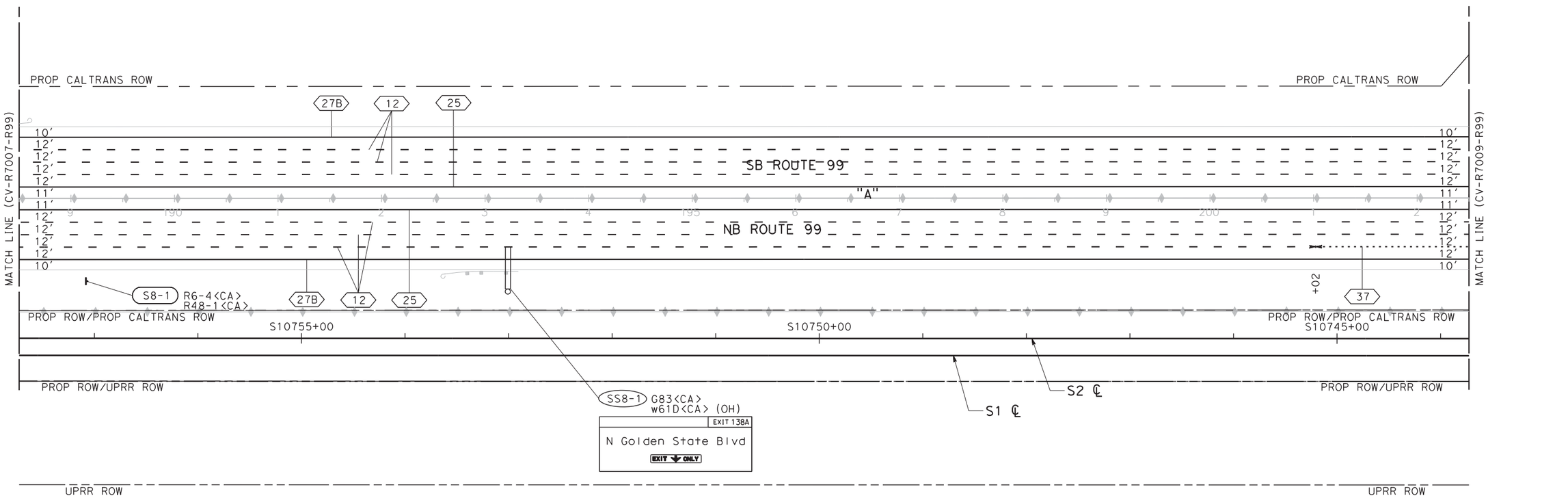

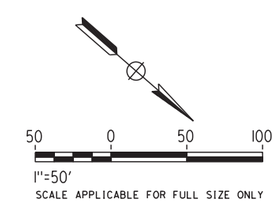

REV	DATE	BY	CHK	APP	DESCRIPTION

DESIGNED BY G. MANOREK
DRAWN BY C. CHIU
CHECKED BY L. HEUSTON
IN CHARGE F. NOBARI
DATE 11/22/11

PROPOSED PRELIMINARY DESIGN

NOT FOR CONSTRUCTION

AECOM Technical Services, Inc.
2020 L Street, Suite 300
Sacramento, CA 95811
CH2MHILL

CALIFORNIA HIGH-SPEED RAIL AUTHORITY

CALIFORNIA HIGH-SPEED TRAIN PROJECT
SIERRA SUBDIVISION
PACKAGE 1A
ROADWAY
PAVEMENT DELINEATION AND SIGNING
SR 99 RE-ALIGNMENT

CONTRACT NO.
DRAWING NO. CV-R7008-R99
SCALE AS SHOWN
SHEET NO.

ychiu 11/16/2011:04:13 AM CAHSRP-r1.tbl CHSR_half_black.plt C:\Documents and Settings\ychiu\My Documents\NDMProj\356751 - California High Speed Rail - SR99 Improvements\1S-CV-R7008-R99.dgn

NOTES:

1. ROW SHOWN REPRESENTS THE MINIMUM ANTICIPATED ROW REQUIREMENTS. ACCURATE ROW AND ACCESS DATA WILL BE MADE AVAILABLE PRIOR TO NOTICE TO PROCEED.

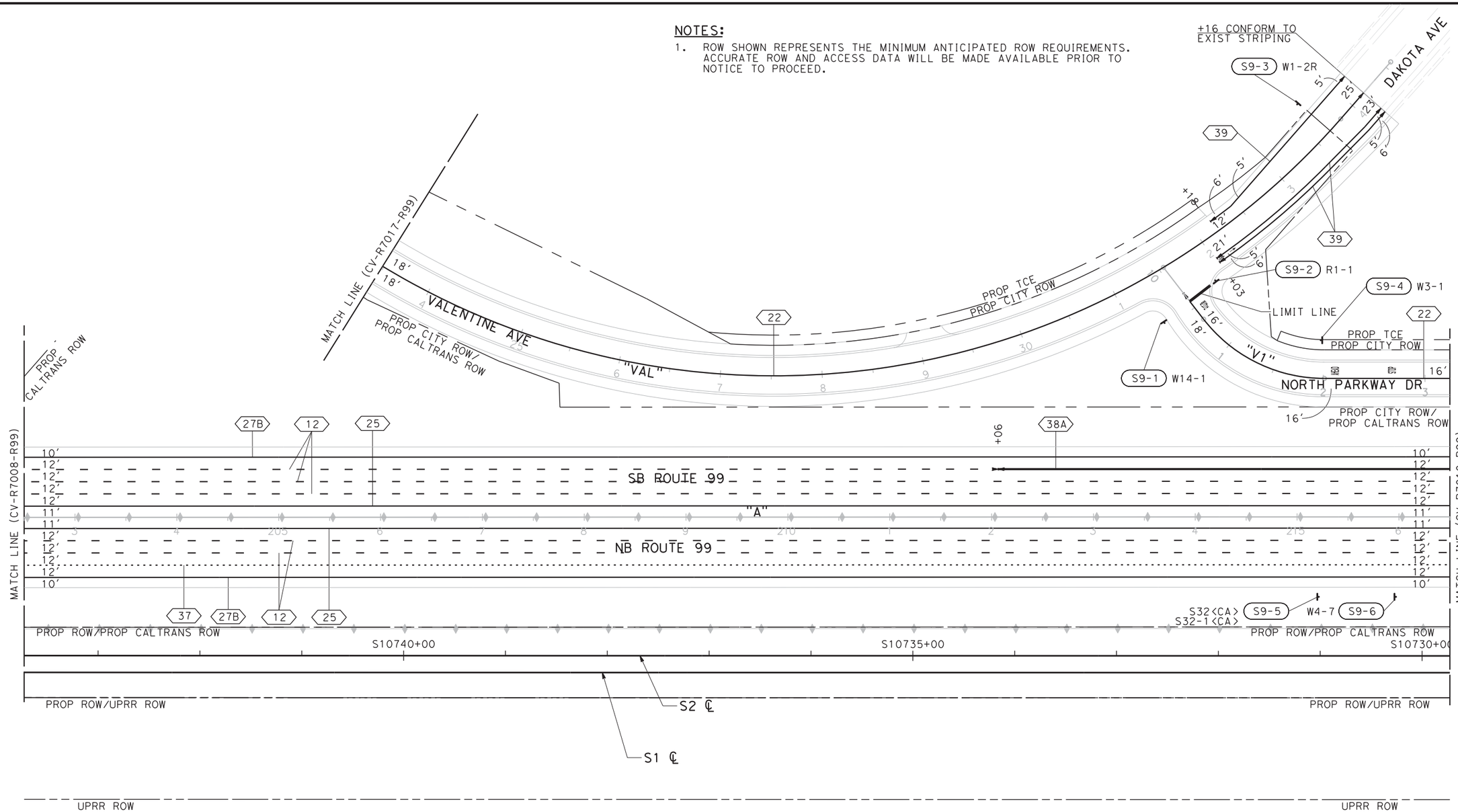

50 0 50 100

1"=50'

SCALE APPLICABLE FOR FULL SIZE ONLY

REV	DATE	BY	CHK	APP	DESCRIPTION

DESIGNED BY G. MANOREK
DRAWN BY C. CHIU
CHECKED BY L. HEUSTON
IN CHARGE F. NOBARI
DATE 11/22/11

PROPOSED PRELIMINARY DESIGN

NOT FOR CONSTRUCTION

AECOM Technical Services, Inc.
2020 L Street, Suite 300
Sacramento, CA 95811

CH2MHILL

CALIFORNIA HIGH-SPEED RAIL AUTHORITY

CALIFORNIA HIGH-SPEED TRAIN PROJECT
SIERRA SUBDIVISION
PACKAGE 1A
ROADWAY
PAVEMENT DELINEATION AND SIGNING
SR 99 RE-ALIGNMENT

CONTRACT NO.
DRAWING NO. CV-R7009-R99
SCALE AS SHOWN
SHEET NO.

ychiu 11/16/2011 11:04:39 AM CAHSRP-r1.tbl CHSR_half_black.plt C:\Documents and Settings\ychiu\My Documents\NDMProj\356751 - California High Speed Rail - SR99 Improvements\1S-CV-R7009-R99.dgn

NOTES:

1. ROW SHOWN REPRESENTS THE MINIMUM ANTICIPATED ROW REQUIREMENTS. ACCURATE ROW AND ACCESS DATA WILL BE MADE AVAILABLE PRIOR TO NOTICE TO PROCEED.

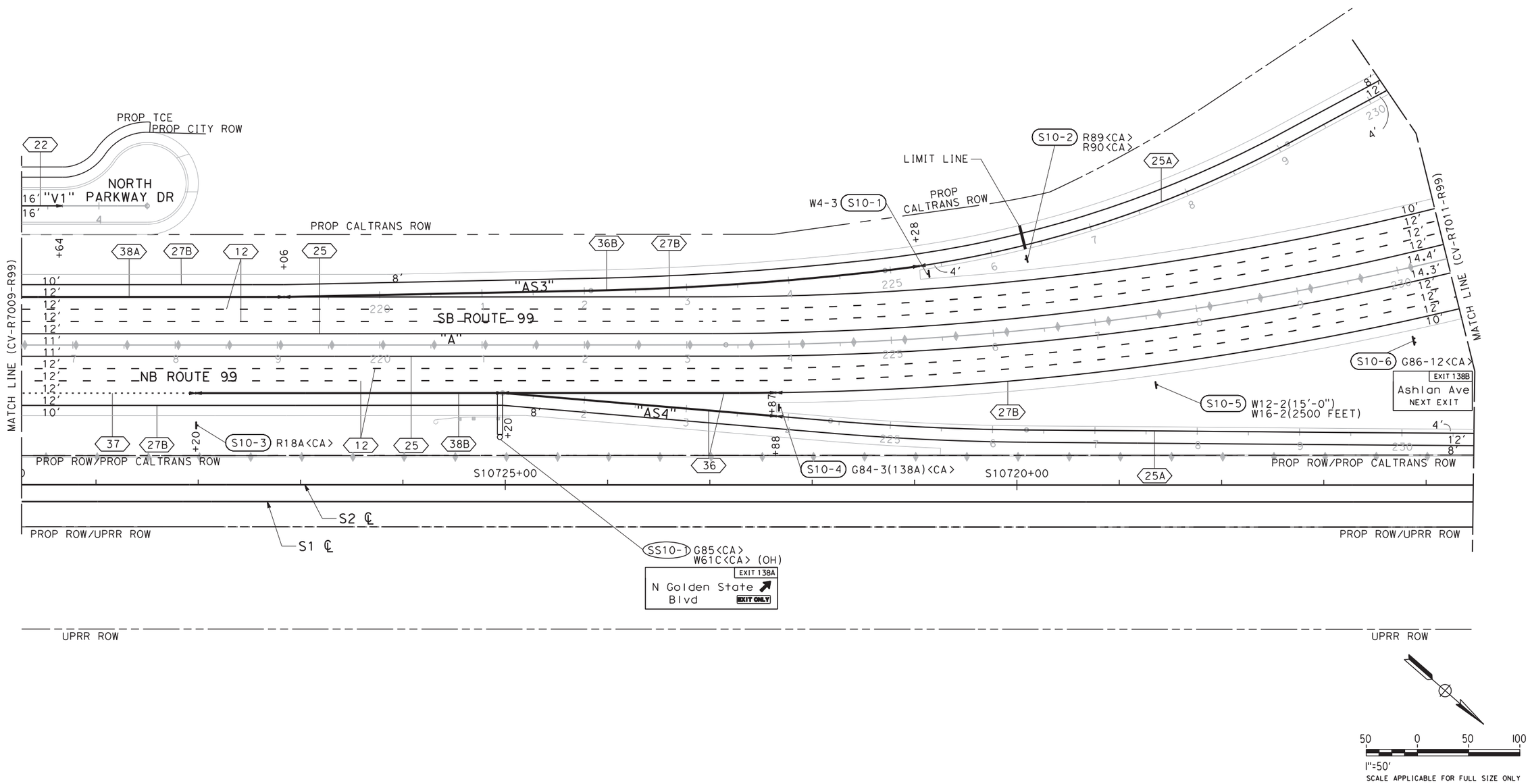

REV	DATE	BY	CHK	APP	DESCRIPTION

DESIGNED BY G. MANOREK
DRAWN BY C. CHIU
CHECKED BY L. HEUSTON
IN CHARGE F. NOBARI
DATE 2/17/12

PROPOSED PRELIMINARY DESIGN

NOT FOR CONSTRUCTION

AECOM Technical Services, Inc.
2020 L Street, Suite 300
Sacramento, CA 95811
CH2MHILL

CALIFORNIA HIGH-SPEED RAIL AUTHORITY

CALIFORNIA HIGH-SPEED TRAIN PROJECT
SIERRA SUBDIVISION
PACKAGE 1A
ROADWAY
PAVEMENT DELINEATION AND SIGNING
SR 99 RE-ALIGNMENT

CONTRACT NO.
DRAWING NO. CV-R7010-R99
SCALE AS SHOWN
SHEET NO.

2/13/2012 5:03:53 PM CAHSRP-R1.TBL CHSR_half_black-pdf995.pc3 sleong
sleong\My Documents\NDMProj\356751 - California High Speed Rail - SR99 Improvements\1S-CV-R7010-R99_OPTIO
ings\sleong\My Documents and Settings\sleo

2/13/2012 5:04:36 PM CAHSRP-R1.TBL CHSR_half_black-pdf995.pt sleong \My Documents\NDMProj\356751 - California High Speed Rail - SR99 Improvements\1S-CV-R7011-R99_OPTIO
sleong

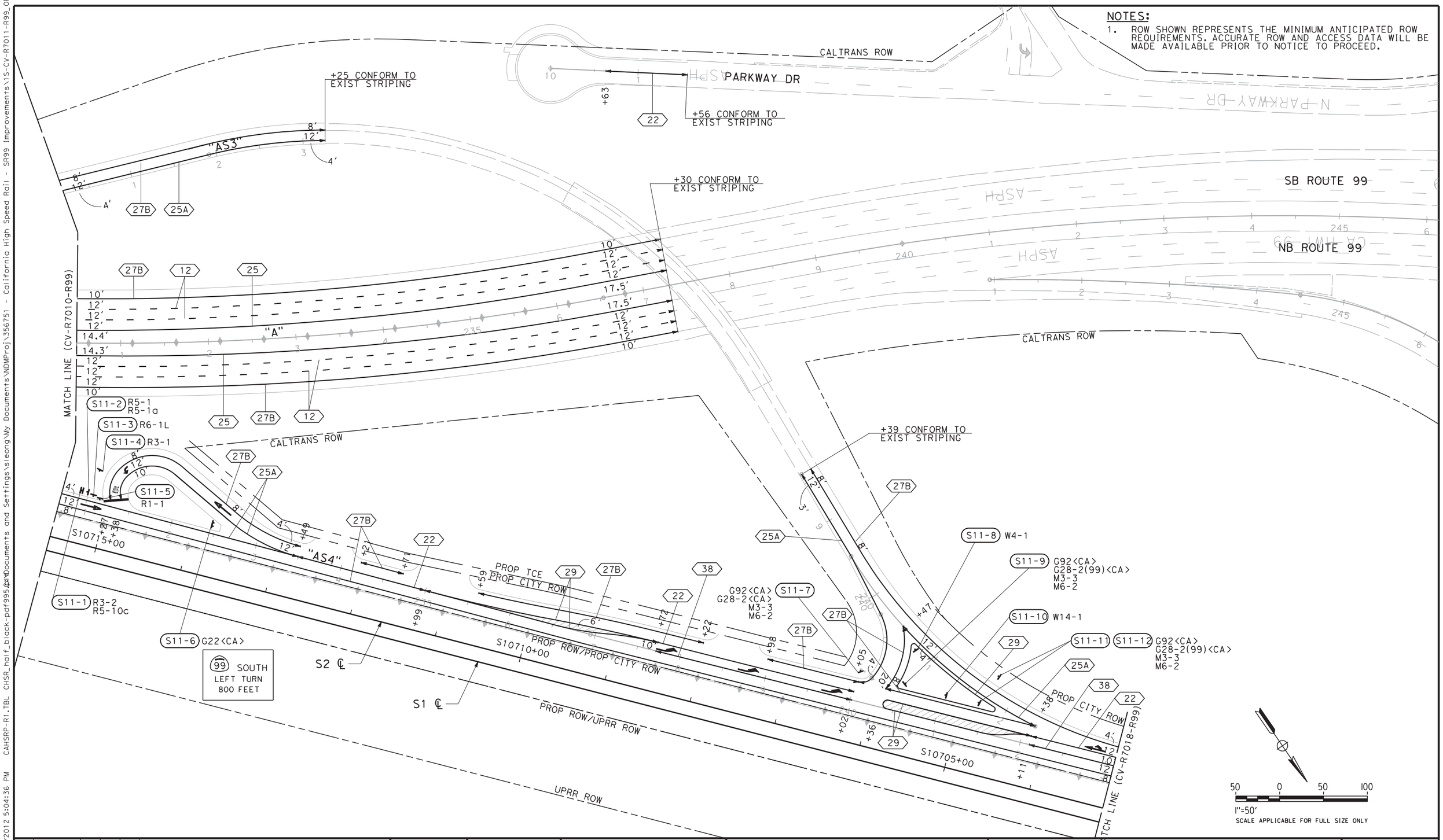

NOTES:

1. ROW SHOWN REPRESENTS THE MINIMUM ANTICIPATED ROW REQUIREMENTS. ACCURATE ROW AND ACCESS DATA WILL BE MADE AVAILABLE PRIOR TO NOTICE TO PROCEED.

REV	DATE	BY	CHK	APP	DESCRIPTION

DESIGNED BY G. MANOREK
DRAWN BY C. CHIU
CHECKED BY L. HEUSTON
IN CHARGE F. NOBARI
DATE 2/17/12

PROPOSED PRELIMINARY DESIGN

NOT FOR CONSTRUCTION

AECOM Technical Services, Inc.
2020 L Street, Suite 300
Sacramento, CA 95811
CH2MHILL

CALIFORNIA HIGH-SPEED RAIL AUTHORITY

CALIFORNIA HIGH-SPEED TRAIN PROJECT
SIERRA SUBDIVISION
PACKAGE 1A
ROADWAY
PAVEMENT DELINEATION AND SIGNING
SR 99 RE-ALIGNMENT

CONTRACT NO.
DRAWING NO. CV-R7011-R99
SCALE AS SHOWN
SHEET NO.

NOTES:

1. ROW SHOWN REPRESENTS THE MINIMUM ANTICIPATED ROW REQUIREMENTS. ACCURATE ROW AND ACCESS DATA WILL BE MADE AVAILABLE PRIOR TO NOTICE TO PROCEED.
2. SEE DRAWING CV-R7001-R99 THRU CV-R7011-R99 FOR ROUTE 99

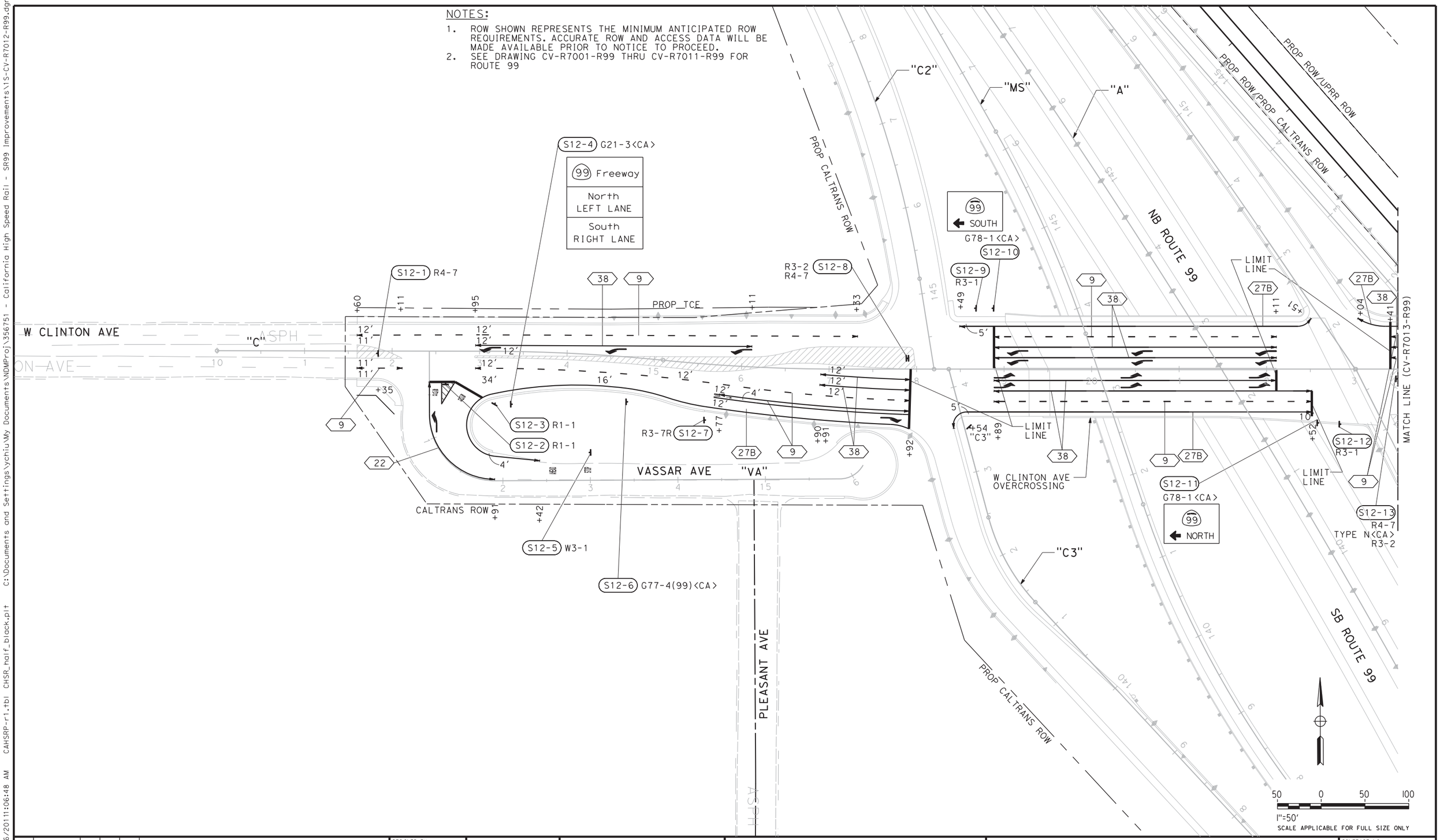

REV	DATE	BY	CHK	APP	DESCRIPTION

DESIGNED BY G. MANOREK
DRAWN BY C. CHIU
CHECKED BY L. HEUSTON
IN CHARGE F. NOBARI
DATE 11/22/11

PROPOSED PRELIMINARY DESIGN

NOT FOR CONSTRUCTION

AECOM Technical Services, Inc.
2020 L Street, Suite 300
Sacramento, CA 95811

CH2MHILL

CALIFORNIA HIGH-SPEED RAIL AUTHORITY

CALIFORNIA HIGH-SPEED TRAIN PROJECT
SIERRA SUBDIVISION
PACKAGE 1A
ROADWAY
PAVEMENT DELINEATION AND SIGNING
SR 99 RE-ALIGNMENT

CONTRACT NO.
DRAWING NO. CV-R7012-R99
SCALE AS SHOWN
SHEET NO.

ychiu 11/16/2011 11:06:48 AM CAHSRP-r1.tbl CHSR_half_black.plt C:\Documents and Settings\ychiu\My Documents\NDMProj\356751 - California High Speed Rail - SR99 Improvements\15-CV-R7012-R99.dgn

NOTES:
1. ROW SHOWN REPRESENTS THE MINIMUM ANTICIPATED ROW REQUIREMENTS. ACCURATE ROW AND ACCESS DATA WILL BE MADE AVAILABLE PRIOR TO NOTICE TO PROCEED.
2. SEE DRAWING CV-R1001-R99 THRU CV-R1011-R99 FOR ROUTE 99

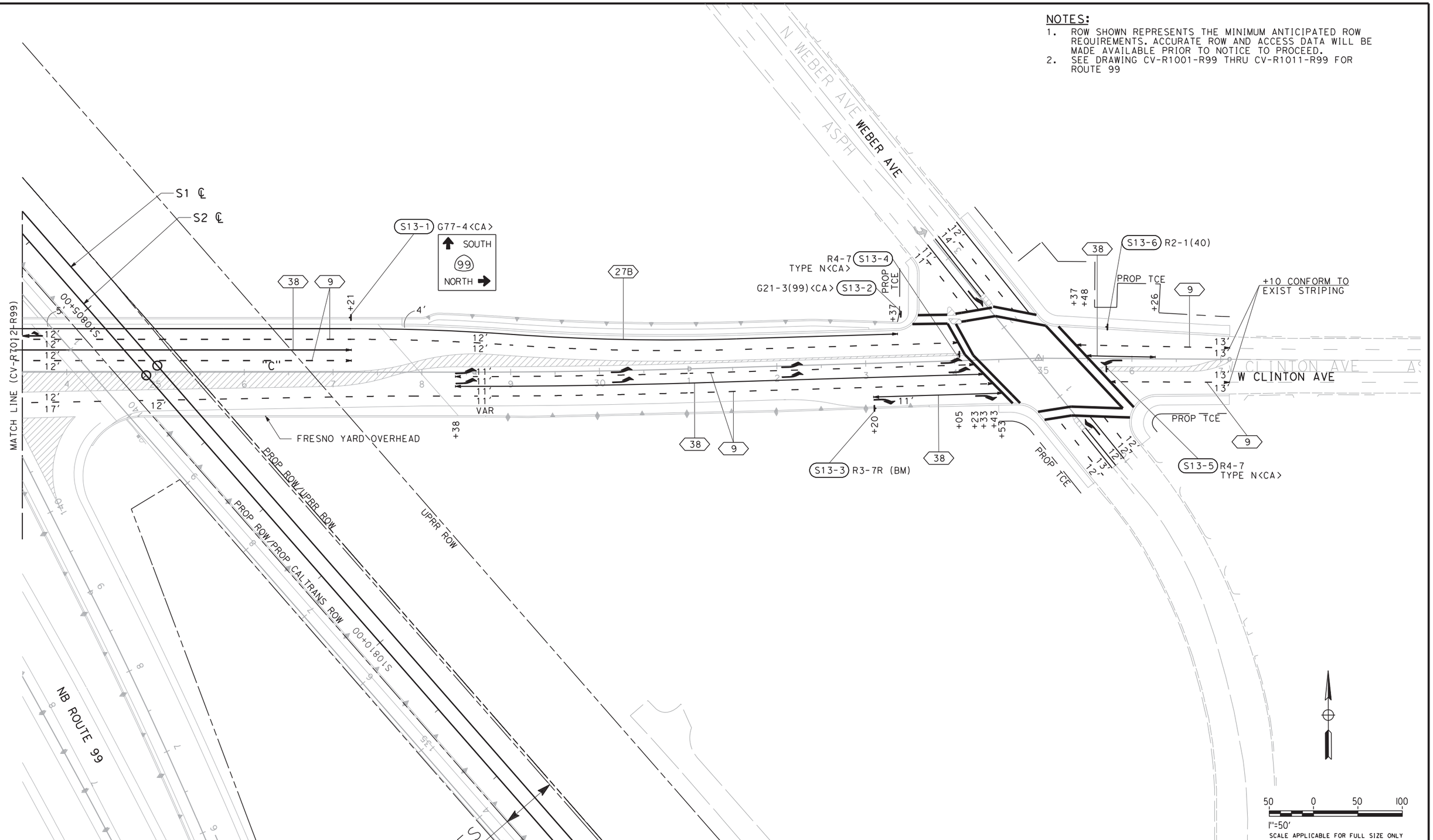

REV	DATE	BY	CHK	APP	DESCRIPTION

DESIGNED BY G. MANOREK
DRAWN BY C. CHIU
CHECKED BY L. HEUSTON
IN CHARGE F. NOBARI
DATE 2/17/12

PROPOSED PRELIMINARY DESIGN

NOT FOR CONSTRUCTION

AECOM Technical Services, Inc.
2020 L Street, Suite 300
Sacramento, CA 95811
CH2MHILL

CALIFORNIA HIGH-SPEED RAIL AUTHORITY

CALIFORNIA HIGH-SPEED TRAIN PROJECT
SIERRA SUBDIVISION
PACKAGE 1A
ROADWAY
PAVEMENT DELINEATION AND SIGNING
SR 99 RE-ALIGNMENT

CONTRACT NO.
DRAWING NO. CV-R7013-R99
SCALE AS SHOWN
SHEET NO.

sleong 2/13/2012 5:05:06 PM CAHSRP-R1.TBL CHSR_half_black-pdf995.pc3 C:\Documents and Settings\sleong\My Documents\NDMProj\356751 - California High Speed Rail - SR99 Improvements\1S-CV-R7013-R99_OPTIO

11/16/2011 11:08:04 AM CAHSRP-r1.tbl CHSR_half_black.plt C:\Documents and Settings\ychiu\My Documents\NDMProj\356751 - California High Speed Rail - SR99 Improvements\15-CV-R7014-R99.dgn
ychiu

NOTES:

1. ROW SHOWN REPRESENTS THE MINIMUM ANTICIPATED ROW REQUIREMENTS. ACCURATE ROW AND ACCESS DATA WILL BE MADE AVAILABLE PRIOR TO NOTICE TO PROCEED.

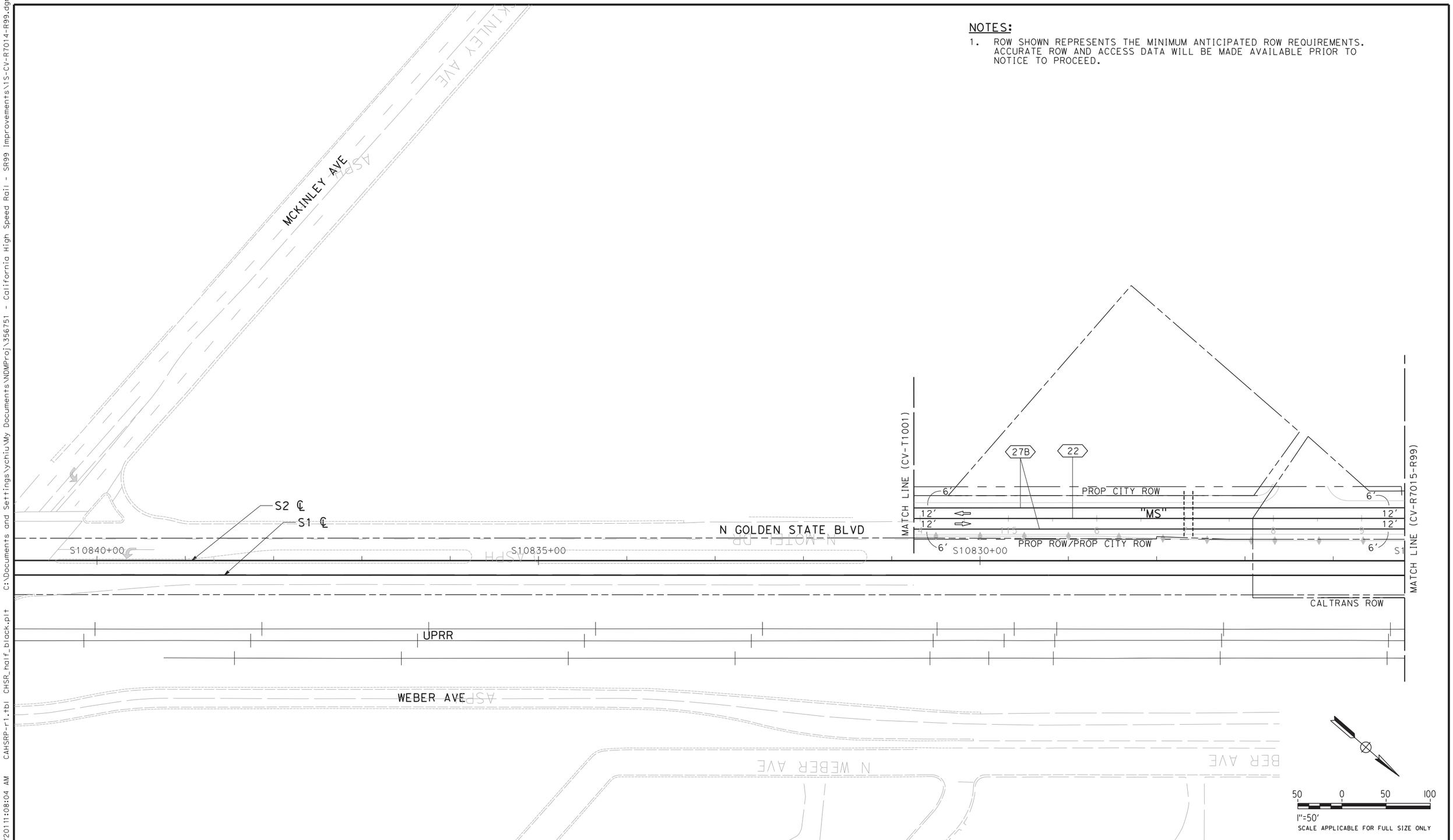

REV	DATE	BY	CHK	APP	DESCRIPTION

DESIGNED BY G. MANOREK
DRAWN BY C. CHIU
CHECKED BY L. HEUSTON
IN CHARGE F. NOBARI
DATE 11/22/11

PROPOSED PRELIMINARY DESIGN

NOT FOR CONSTRUCTION

AECOM Technical Services, Inc.
2020 L Street, Suite 300
Sacramento, CA 95811
CH2MHILL

CALIFORNIA HIGH-SPEED RAIL AUTHORITY

CALIFORNIA HIGH-SPEED TRAIN PROJECT
SIERRA SUBDIVISION
PACKAGE 1A
ROADWAY
PAVEMENT DELINEATION AND SIGNING
SR 99 RE-ALIGNMENT

CONTRACT NO.
DRAWING NO. CV-R7014-R99
SCALE AS SHOWN
SHEET NO.

NOTES:

1. ROW SHOWN REPRESENTS THE MINIMUM ANTICIPATED ROW REQUIREMENTS. ACCURATE ROW AND ACCESS DATA WILL BE MADE AVAILABLE PRIOR TO NOTICE TO PROCEED.

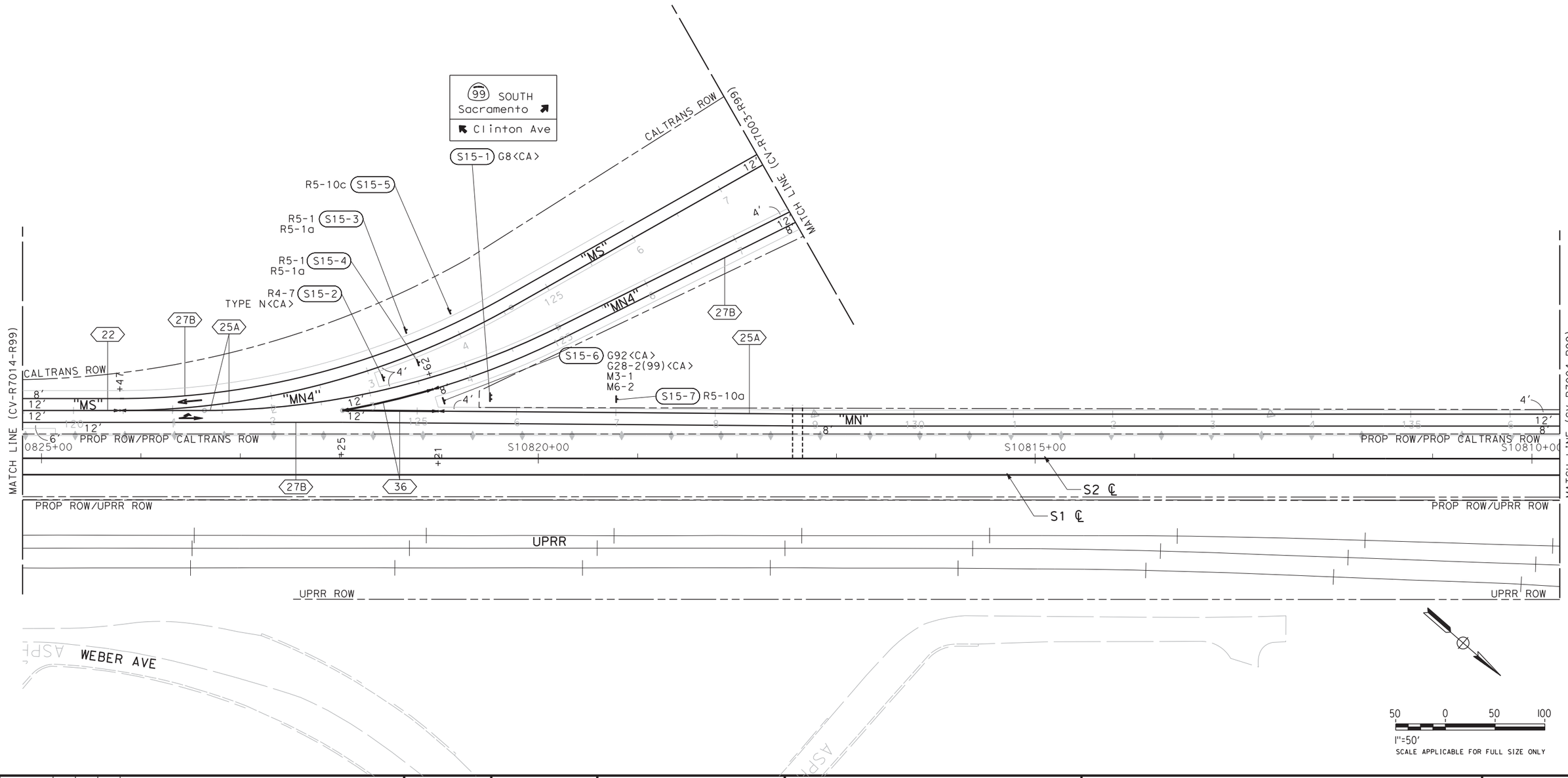

REV	DATE	BY	CHK	APP	DESCRIPTION

DESIGNED BY G. MANOREK
DRAWN BY C. CHIU
CHECKED BY L. HEUSTON
IN CHARGE F. NOBARI
DATE 11/22/11

PROPOSED PRELIMINARY DESIGN

NOT FOR CONSTRUCTION

AECOM Technical Services, Inc.
2020 L Street, Suite 300
Sacramento, CA 95811

CH2MHILL

CALIFORNIA HIGH-SPEED RAIL AUTHORITY

CALIFORNIA HIGH-SPEED TRAIN PROJECT
SIERRA SUBDIVISION
PACKAGE 1A
ROADWAY
PAVEMENT DELINEATION AND SIGNING
SR 99 RE-ALIGNMENT

CONTRACT NO.
DRAWING NO. CV-R7015-R99
SCALE AS SHOWN
SHEET NO.

ychiu 11/16/2011 11:08:40 AM CAHSRP-r1.tbl CHSR_half_black.plt C:\Documents and Settings\ychiu\My Documents\NDMProj\356751 - California High Speed Rail - SR99 Improvements\15-CV-R7015-R99.dgn

NOTES:

1. ROW SHOWN REPRESENTS THE MINIMUM ANTICIPATED ROW REQUIREMENTS. ACCURATE ROW AND ACCESS DATA WILL BE MADE AVAILABLE PRIOR TO NOTICE TO PROCEED.
2. SEE DRAWING CV-R7001-R99 THRU CV-R7011-R99 FOR ROUTE 99

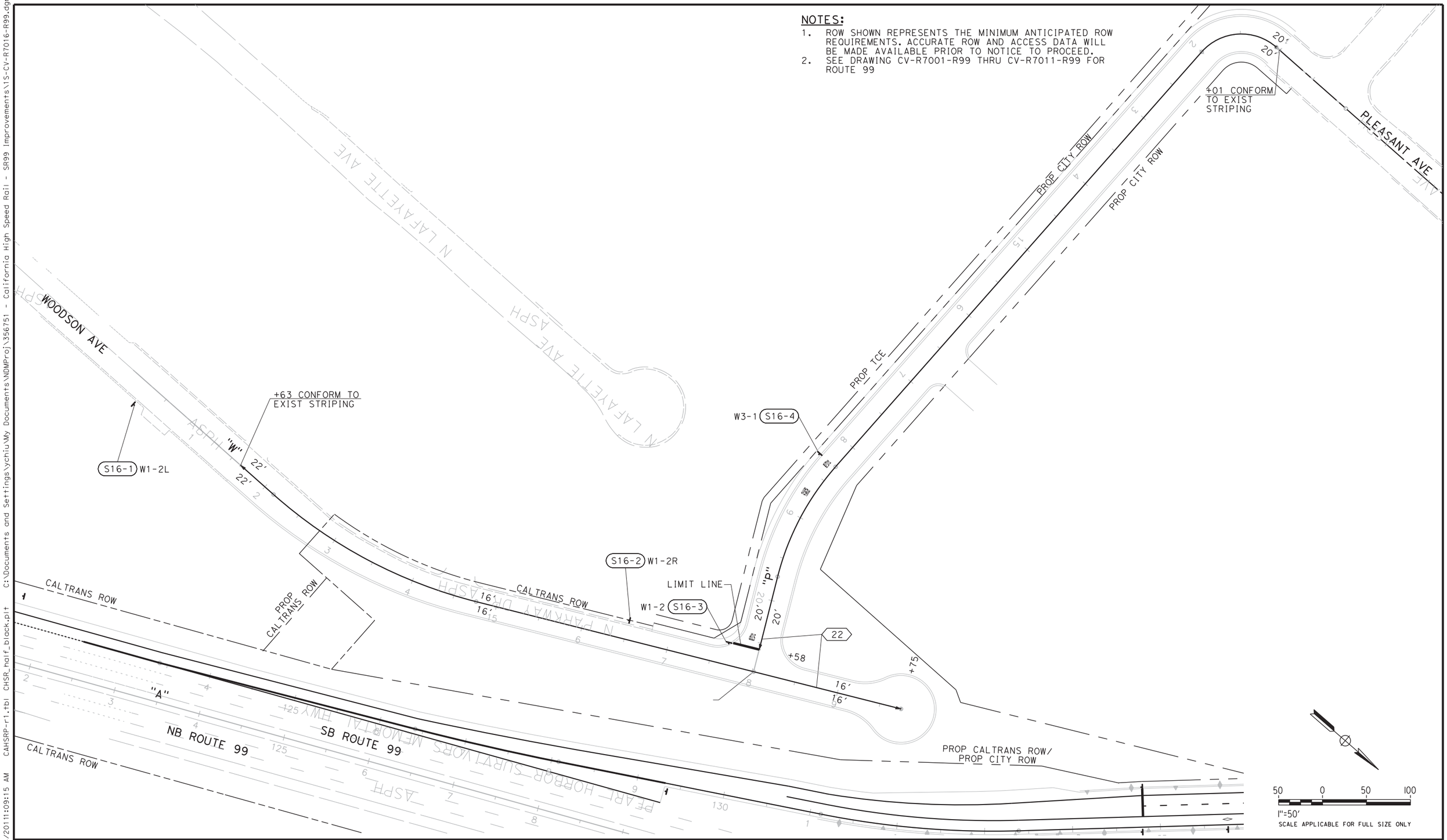

REV	DATE	BY	CHK	APP	DESCRIPTION

DESIGNED BY G. MANOREK
DRAWN BY C. CHIU
CHECKED BY L. HEUSTON
IN CHARGE F. NOBARI
DATE 11/22/11

PROPOSED PRELIMINARY DESIGN

NOT FOR CONSTRUCTION

AECOM Technical Services, Inc.
2020 L Street, Suite 300
Sacramento, CA 95811
CH2MHILL

CALIFORNIA HIGH-SPEED RAIL AUTHORITY

CALIFORNIA HIGH-SPEED TRAIN PROJECT
SIERRA SUBDIVISION
PACKAGE 1A
ROADWAY
PAVEMENT DELINEATION AND SIGNING
SR 99 RE-ALIGNMENT

CONTRACT NO.
DRAWING NO. CV-R7016-R99
SCALE AS SHOWN
SHEET NO.

11/16/2011 11:09:15 AM CAHSRP-r1.tbl CHSR_half_black.plt C:\Documents and Settings\ychiu\My Documents\NDMProj\356751 - California High Speed Rail - SR99 Improvements\15-CV-R7016-R99.dgn ychiu

ychiu 11/16/2011 11:09:55 AM CAHSRP-r1.tbl CHSR_half_black.plt C:\Documents and Settings\ychiu\My Documents\NDMProj\356751 - California High Speed Rail - SR99 Improvements\1S-CV-R7017-R99.dgn

NOTES:

1. ROW SHOWN REPRESENTS THE MINIMUM ANTICIPATED ROW REQUIREMENTS. ACCURATE ROW AND ACCESS DATA WILL BE MADE AVAILABLE PRIOR TO NOTICE TO PROCEED.
2. SEE DRAWINGS CV-R7001-R99 THRU CV-R7011-R99 FOR ROUTE 99

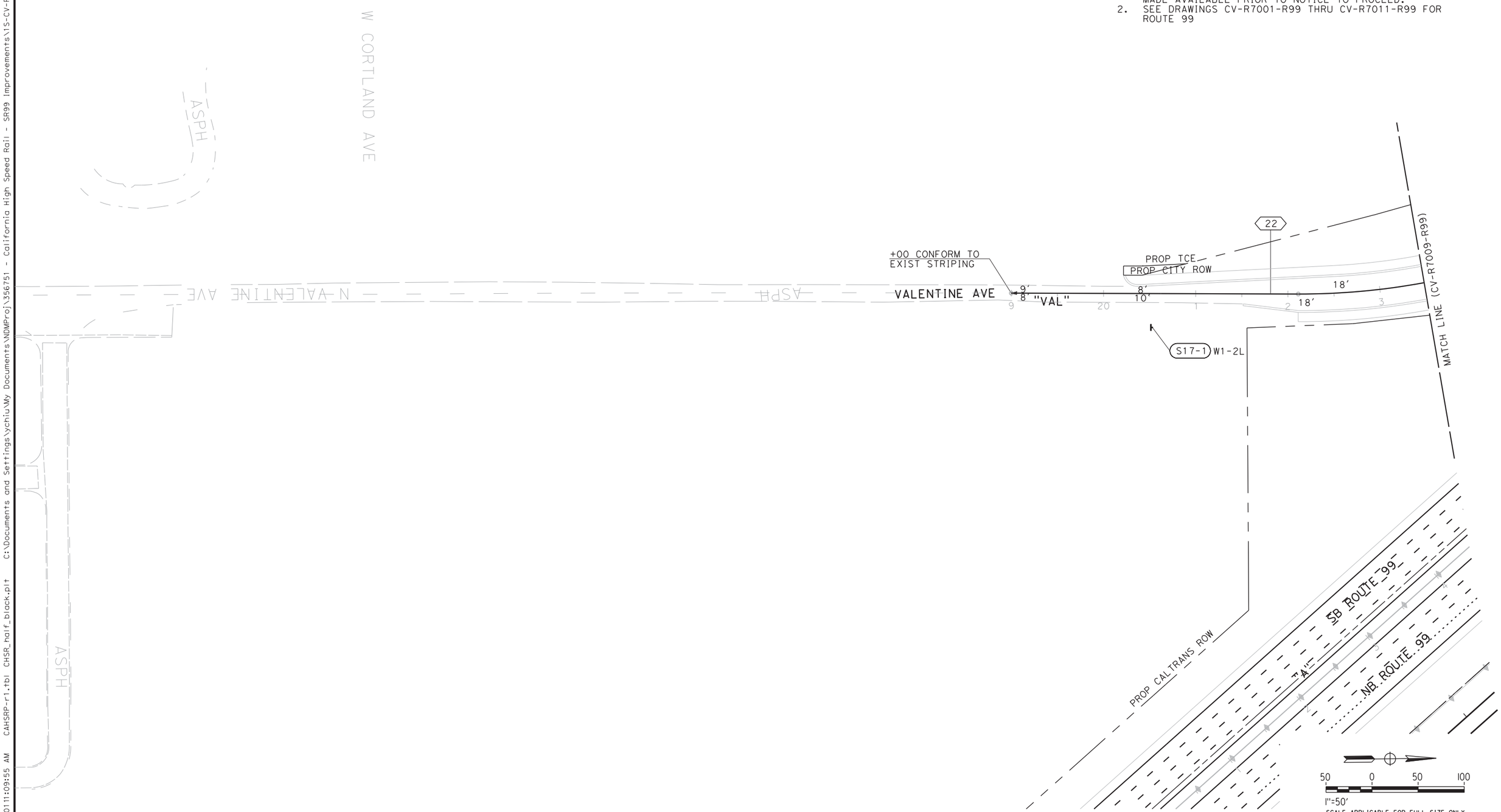

REV	DATE	BY	CHK	APP	DESCRIPTION

DESIGNED BY G. MANOREK
DRAWN BY C. CHIU
CHECKED BY L. HEUSTON
IN CHARGE F. NOBARI
DATE 11/22/11

PROPOSED PRELIMINARY DESIGN

NOT FOR CONSTRUCTION

AECOM Technical Services, Inc.
2020 L Street, Suite 300
Sacramento, CA 95811
CH2MHILL

CALIFORNIA HIGH-SPEED RAIL AUTHORITY

CALIFORNIA HIGH-SPEED TRAIN PROJECT
SIERRA SUBDIVISION
PACKAGE 1A
ROADWAY
PAVEMENT DELINEATION AND SIGNING
SR 99 RE-ALIGNMENT

CONTRACT NO.
DRAWING NO. CV-R7017-R99
SCALE AS SHOWN
SHEET NO.

NOTES:

1. ROW SHOWN REPRESENTS THE MINIMUM ANTICIPATED ROW REQUIREMENTS. ACCURATE ROW AND ACCESS DATA WILL BE MADE AVAILABLE PRIOR TO NOTICE TO PROCEED.

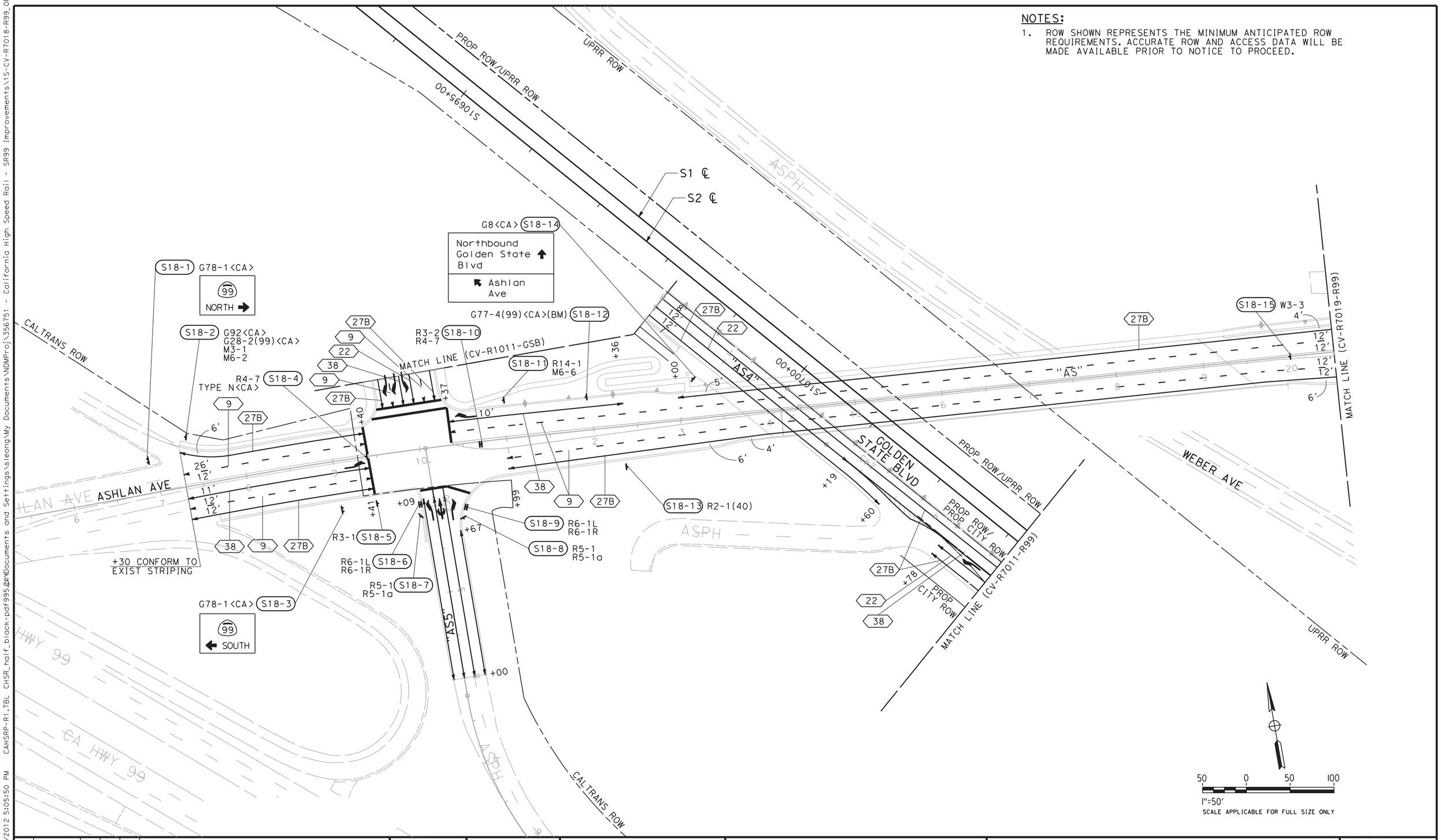

REV	DATE	BY	CHK	APP	DESCRIPTION

DESIGNED BY G. MANOREK
DRAWN BY C. CHIU
CHECKED BY L. HEUSTON
IN CHARGE F. NOBARI
DATE 2/17/12

PROPOSED PRELIMINARY DESIGN

NOT FOR CONSTRUCTION

AECOM Technical Services, Inc.
2020 L Street, Suite 300
Sacramento, CA 95811

CH2MHILL

CALIFORNIA HIGH-SPEED RAIL AUTHORITY

CALIFORNIA HIGH-SPEED TRAIN PROJECT
SIERRA SUBDIVISION
PACKAGE 1A
ROADWAY
PAVEMENT DELINEATION AND SIGNING
SR 99 RE-ALIGNMENT

CONTRACT NO.
DRAWING NO. CV-R7018-R99
SCALE AS SHOWN
SHEET NO.

sleong 2/13/2012 5:05:50 PM CAHSRP-R1.TBL CHSR_half_black-pdf995.prt C:\Documents and Settings\sleong\My Documents\NDMProj\356751 - California High Speed Rail - SR99 Improvements\1S-CV-R7018-R99_OPTIO

sleong 2/13/2012 5:06:35 PM CAHSRP-R1.TBL CHSR_half_black-pdf995.pt Documents and Settings\sleong\My Documents\NDMProj\356751 - California High Speed Rail - SR99 Improvements\1S-CV-R7019-R99_OPTIO

NOTES:

1. ROW SHOWN REPRESENTS THE MINIMUM ANTICIPATED ROW REQUIREMENTS. ACCURATE ROW AND ACCESS DATA WILL BE MADE AVAILABLE PRIOR TO NOTICE TO PROCEED.

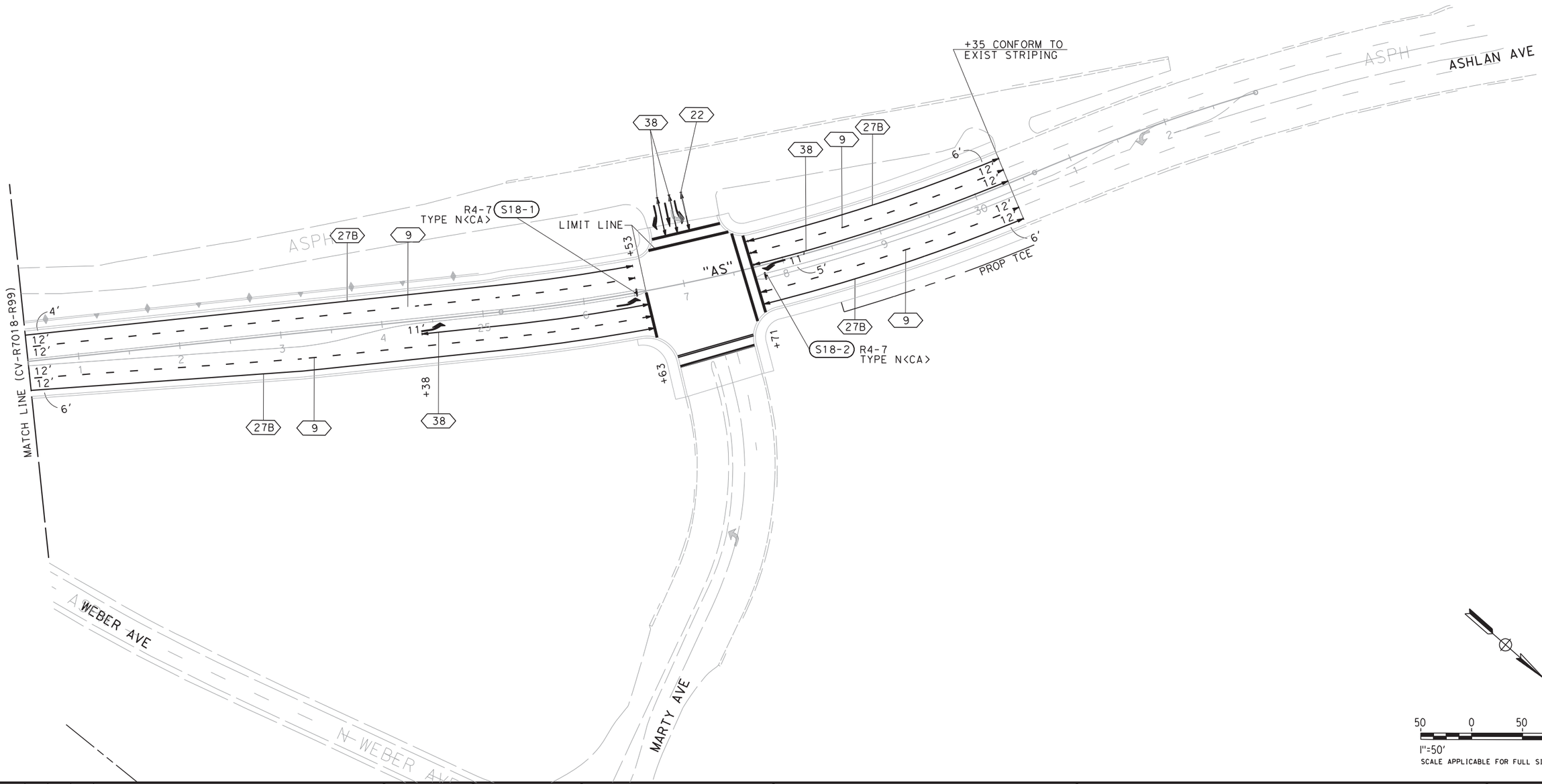

REV	DATE	BY	CHK	APP	DESCRIPTION

DESIGNED BY G. MANOREK
DRAWN BY C. CHIU
CHECKED BY L. HEUSTON
IN CHARGE F. NOBARI
DATE 2/17/12

PROPOSED PRELIMINARY DESIGN

NOT FOR CONSTRUCTION

AECOM Technical Services, Inc.
2020 L Street, Suite 300
Sacramento, CA 95811

CH2MHILL

CALIFORNIA HIGH-SPEED RAIL AUTHORITY

CALIFORNIA HIGH-SPEED TRAIN PROJECT
SIERRA SUBDIVISION
PACKAGE 1A
ROADWAY
PAVEMENT DELINEATION AND SIGNING
SR 99 RE-ALIGNMENT

CONTRACT NO.
DRAWING NO. CV-R7019-R99
SCALE AS SHOWN
SHEET NO.

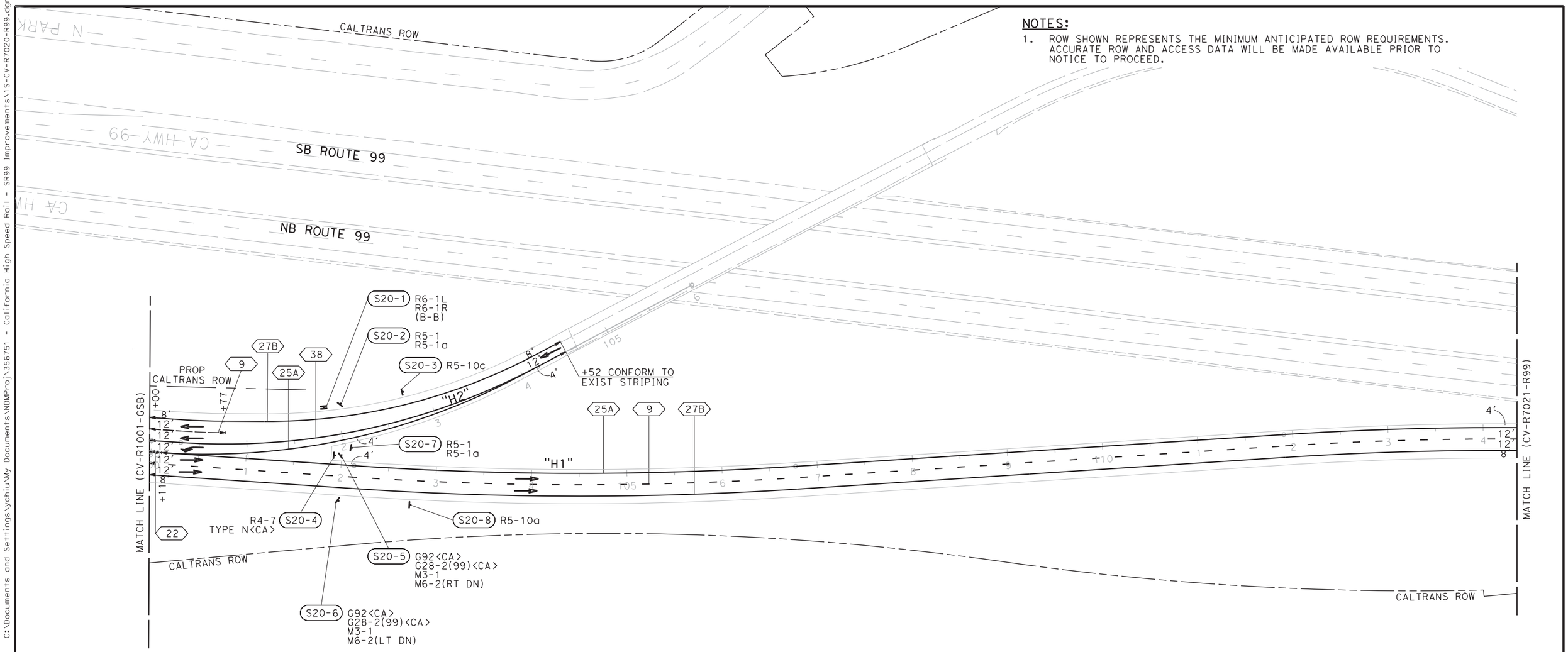

NOTES:

1. ROW SHOWN REPRESENTS THE MINIMUM ANTICIPATED ROW REQUIREMENTS. ACCURATE ROW AND ACCESS DATA WILL BE MADE AVAILABLE PRIOR TO NOTICE TO PROCEED.

50 0 50 100

1"=50'

SCALE APPLICABLE FOR FULL SIZE ONLY

REV	DATE	BY	CHK	APP	DESCRIPTION

DESIGNED BY G. MANOREK
DRAWN BY C. CHIU
CHECKED BY L. HEUSTON
IN CHARGE F. NOBARI
DATE 11/22/11

PROPOSED PRELIMINARY DESIGN

NOT FOR CONSTRUCTION

AECOM Technical Services, Inc.
2020 L Street, Suite 300
Sacramento, CA 95811

CH2MHILL

CALIFORNIA HIGH-SPEED RAIL AUTHORITY

CALIFORNIA HIGH-SPEED TRAIN PROJECT
SIERRA SUBDIVISION
PACKAGE 1A
ROADWAY
PAVEMENT DELINEATION AND SIGNING
SR 99 RE-ALIGNMENT

CONTRACT NO.
DRAWING NO. CV-R7020-R99
SCALE AS SHOWN
SHEET NO.

ychiu 11/16/2011 11:12:07 AM CAHSRP-r1.tbl CHSR_half_black.plt C:\Documents and Settings\ychiu\My Documents\NDMProj\356751 - California High Speed Rail - SR99 Improvements\1S-CV-R7020-R99.dgn

NOTES:

1. ROW SHOWN REPRESENTS THE MINIMUM ANTICIPATED ROW REQUIREMENTS. ACCURATE ROW AND ACCESS DATA WILL BE MADE AVAILABLE PRIOR TO NOTICE TO PROCEED.

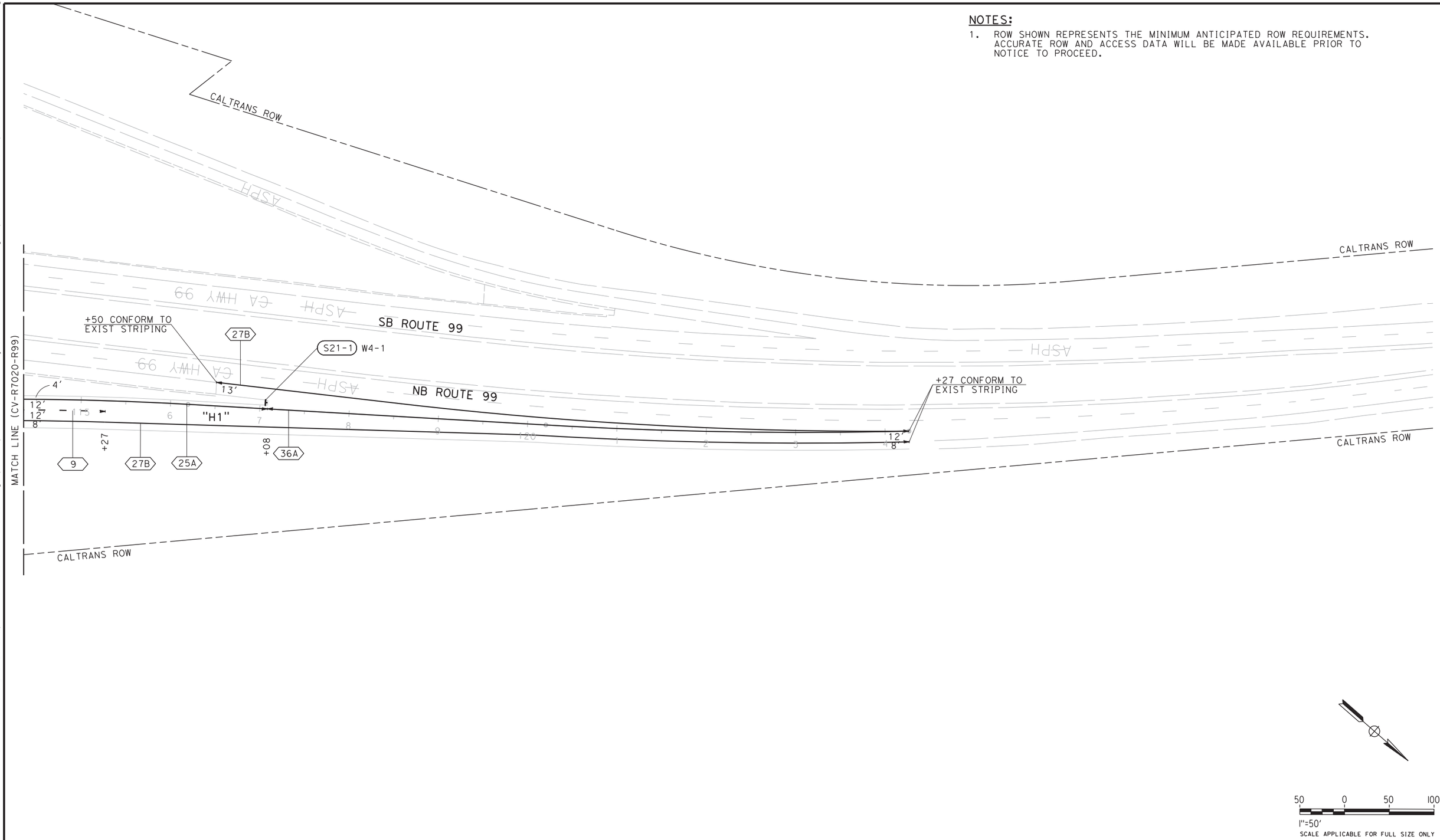

REV	DATE	BY	CHK	APP	DESCRIPTION

DESIGNED BY G. MANOREK
DRAWN BY C. CHIU
CHECKED BY L. HEUSTON
IN CHARGE F. NOBARI
DATE 11/22/11

PROPOSED PRELIMINARY DESIGN

NOT FOR CONSTRUCTION

AECOM Technical Services, Inc.
2020 L Street, Suite 300
Sacramento, CA 95811
CH2MHILL

CALIFORNIA HIGH-SPEED RAIL AUTHORITY

CALIFORNIA HIGH-SPEED TRAIN PROJECT
SIERRA SUBDIVISION
PACKAGE 1A
ROADWAY
PAVEMENT DELINEATION AND SIGNING
SR 99 RE-ALIGNMENT

CONTRACT NO.
DRAWING NO. CV-R7021-R99
SCALE AS SHOWN
SHEET NO.

ychiu 11/16/2011 11:19:50 AM CAHSRP-R1.TBL CHSR_half_black.plt C:\Documents and Settings\ychiu\My Documents\NDMProj\356751 - California High Speed Rail - SR99 Improvements\1S-CV-R7021-R99.dgn

11/15/2011 10:43:58 PM CAHSRP-r1.tbl CHSR_half_black.plt C:\Documents and Settings\ychiu\My Documents\NDMProj\356751 - California High Speed Rail - SR99 Improvements\1S-CV-I1001-STG1A-R99.
ychiu

NOTES:

1. ROW SHOWN REPRESENTS THE MINIMUM ANTICIPATED ROW REQUIREMENTS. ACCURATE ROW AND ACCESS DATA WILL BE MADE AVAILABLE PRIOR TO NOTICE TO PROCEED.

LEGEND:

- STAGE 1A CONSTRUCTION
- PREVIOUS CONSTRUCTION
- DIRECTION OF TRAFFIC
- TEMPORARY PAVEMENT

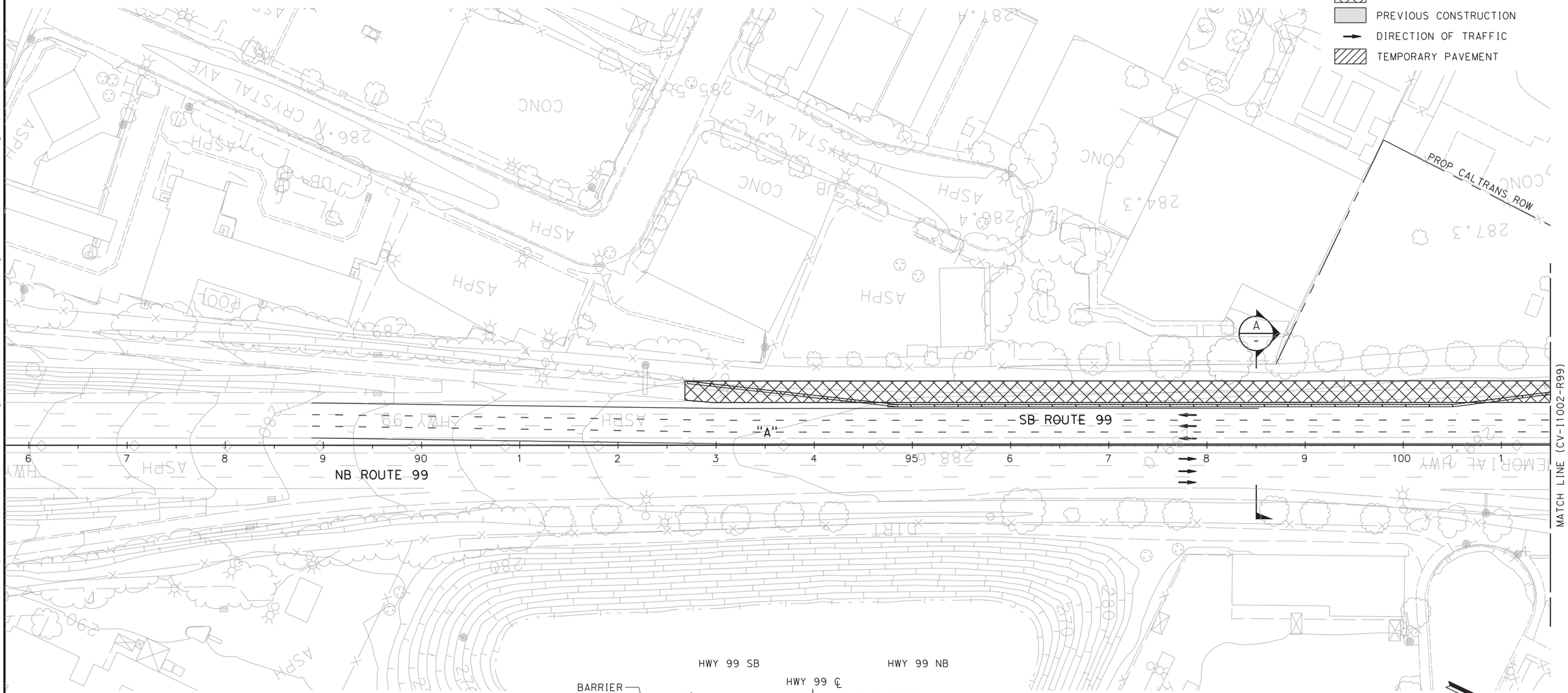

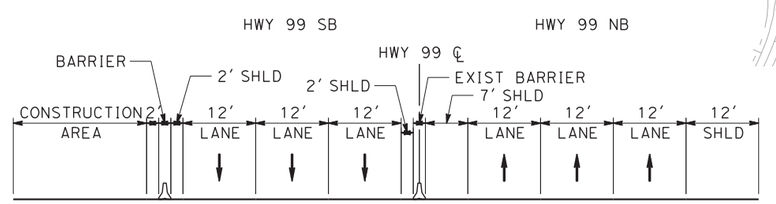

SECTION A

50 0 50 100
1"=50'
SCALE APPLICABLE FOR FULL SIZE ONLY

REV	DATE	BY	CHK	APP	DESCRIPTION

DESIGNED BY C. BENSON
DRAWN BY R. MEZA
CHECKED BY L. HEUSTON
IN CHARGE F. NOBARI
DATE 11/22/11

PROPOSED PRELIMINARY DESIGN

NOT FOR CONSTRUCTION

AECOM Technical Services, Inc.
2020 L Street, Suite 300
Sacramento, CA 95811
CH2MHILL

CALIFORNIA HIGH-SPEED RAIL AUTHORITY

CALIFORNIA HIGH-SPEED TRAIN PROJECT
SIERRA SUBDIVISION
PACKAGE 1A
CONSTRUCTION STAGING
STAGE 1A
SR 99 RE-ALIGNMENT

CONTRACT NO.
DRAWING NO. CV-I1001-R99
SCALE AS SHOWN
SHEET NO.

sleong 2/13/2012 10:11:42 AM CAHSRP-R1.TBL CHSR_half_black-pdf995.pt C:\Documents and Settings\sleong\My Documents\NDMProj\356751 - California High Speed Rail - SR99 Improvements\1S-CV-I1002-STG1A-R99

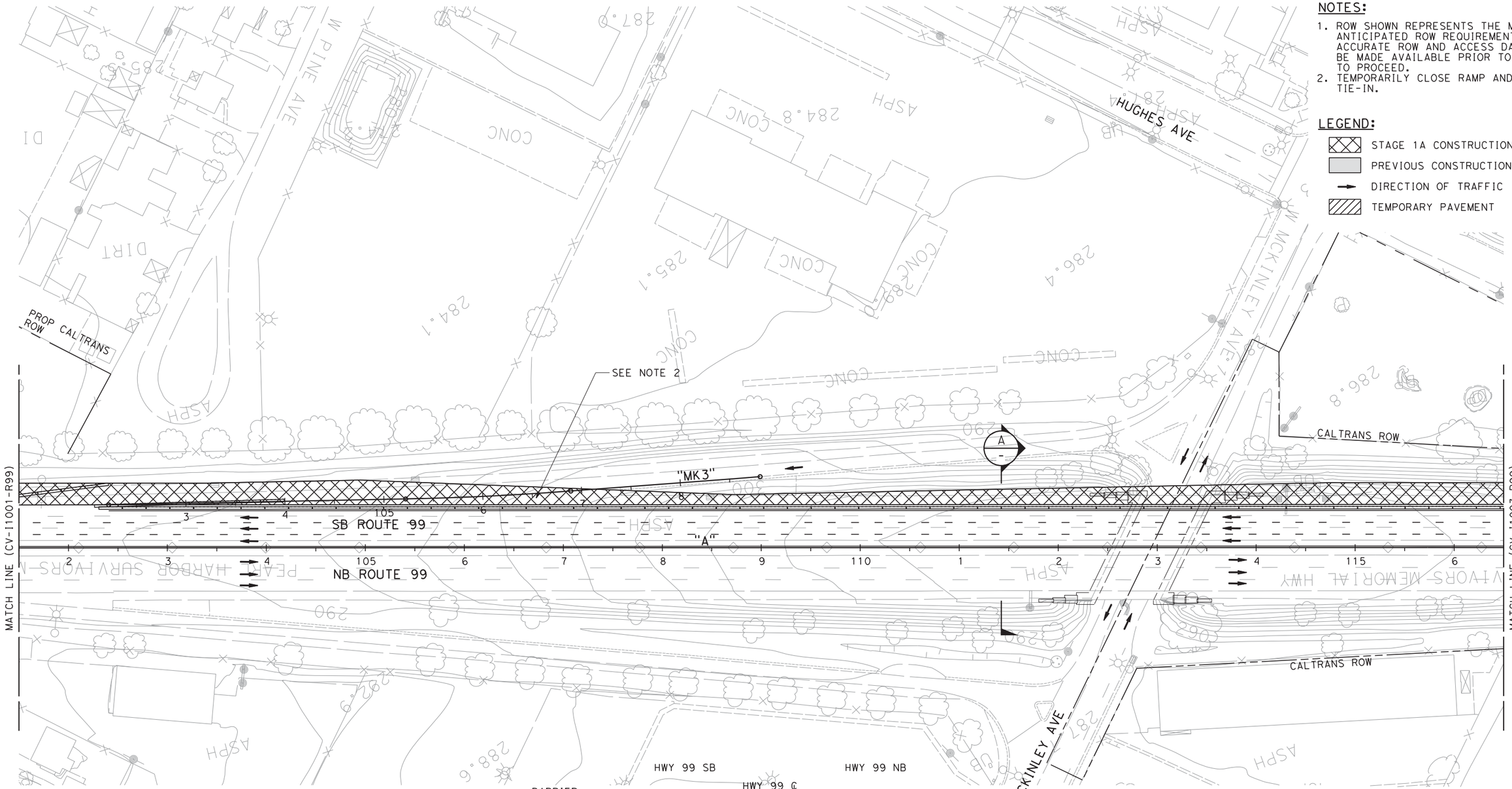

NOTES:

1. ROW SHOWN REPRESENTS THE MINIMUM ANTICIPATED ROW REQUIREMENTS. ACCURATE ROW AND ACCESS DATA WILL BE MADE AVAILABLE PRIOR TO NOTICE TO PROCEED.
2. TEMPORARILY CLOSE RAMP AND TIE-IN.

LEGEND:

- STAGE 1A CONSTRUCTION
- PREVIOUS CONSTRUCTION
- DIRECTION OF TRAFFIC
- TEMPORARY PAVEMENT

REV	DATE	BY	CHK	APP	DESCRIPTION

DESIGNED BY C. BENSON
DRAWN BY R. MEZA
CHECKED BY L. HEUSTON
IN CHARGE F. NOBARI
DATE 2/17/12

PROPOSED PRELIMINARY DESIGN

NOT FOR CONSTRUCTION

AECOM Technical Services, Inc.
2020 L Street, Suite 300
Sacramento, CA 95811
CH2MHILL

CALIFORNIA HIGH-SPEED RAIL AUTHORITY

CALIFORNIA HIGH-SPEED TRAIN PROJECT
SIERRA SUBDIVISION
PACKAGE 1A
CONSTRUCTION STAGING
STAGE 1A
SR 99 RE-ALIGNMENT

CONTRACT NO.
DRAWING NO. CV-I1002-R99
SCALE AS SHOWN
SHEET NO.

2/13/2012 10:00:48 AM CAHSRP-R1.TBL CHSR_half_black-pdf995.pdf sleong
d Settings\sleong\My Documents\NDMProj\356751 - California High Speed Rail - SR99 Improvements\1S-CV-I1003-STG1A-R99

NOTES:

1. ROW SHOWN REPRESENTS THE MINIMUM ANTICIPATED ROW REQUIREMENTS. ACCURATE ROW AND ACCESS DATA WILL BE MADE AVAILABLE PRIOR TO NOTICE TO PROCEED.
2. TEMPORARILY CLOSE RAMP AND TIE-IN.
3. PLACE TEMPORARY PAVEMENT AS NECESSARY TO MAINTAIN TRAFFIC ALONG N WOODSON AVE.

LEGEND:

- STAGE 1A CONSTRUCTION
- PREVIOUS CONSTRUCTION
- DIRECTION OF TRAFFIC
- TEMPORARY PAVEMENT

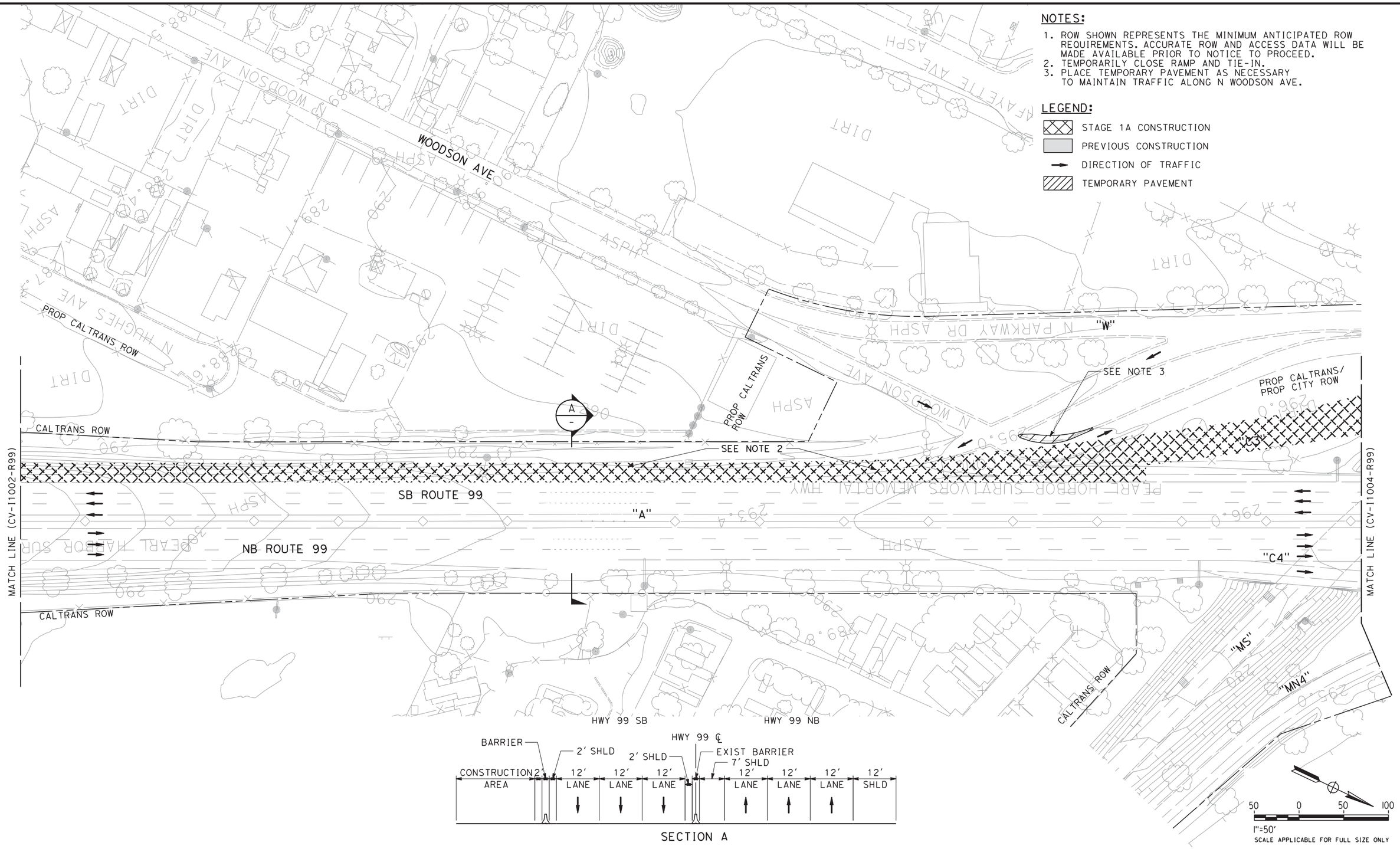

REV	DATE	BY	CHK	APP	DESCRIPTION

DESIGNED BY C. BENSON
DRAWN BY R. MEZA
CHECKED BY L. HEUSTON
IN CHARGE F. NOBARI
DATE 2/17/12

PROPOSED PRELIMINARY DESIGN

NOT FOR CONSTRUCTION

AECOM Technical Services, Inc.
2020 L Street, Suite 300
Sacramento, CA 95811
CH2MHILL

CALIFORNIA HIGH-SPEED RAIL AUTHORITY

CALIFORNIA HIGH-SPEED TRAIN PROJECT
SIERRA SUBDIVISION
PACKAGE 1A
CONSTRUCTION STAGING
STAGE 1A
SR 99 RE-ALIGNMENT

CONTRACT NO.
DRAWING NO. CV-I1003-R99
SCALE AS SHOWN
SHEET NO.

NOTES:

1. ROW SHOWN REPRESENTS THE MINIMUM ANTICIPATED ROW REQUIREMENTS. ACCURATE ROW AND ACCESS DATA WILL BE MADE AVAILABLE PRIOR TO NOTICE TO PROCEED.
2. REMOVE EXISTING STRUCTURE AT NIGHT.
3. TIE-IN TO RAMP.

LEGEND:

- STAGE 1A CONSTRUCTION
- PREVIOUS CONSTRUCTION
- DIRECTION OF TRAFFIC
- TEMPORARY PAVEMENT

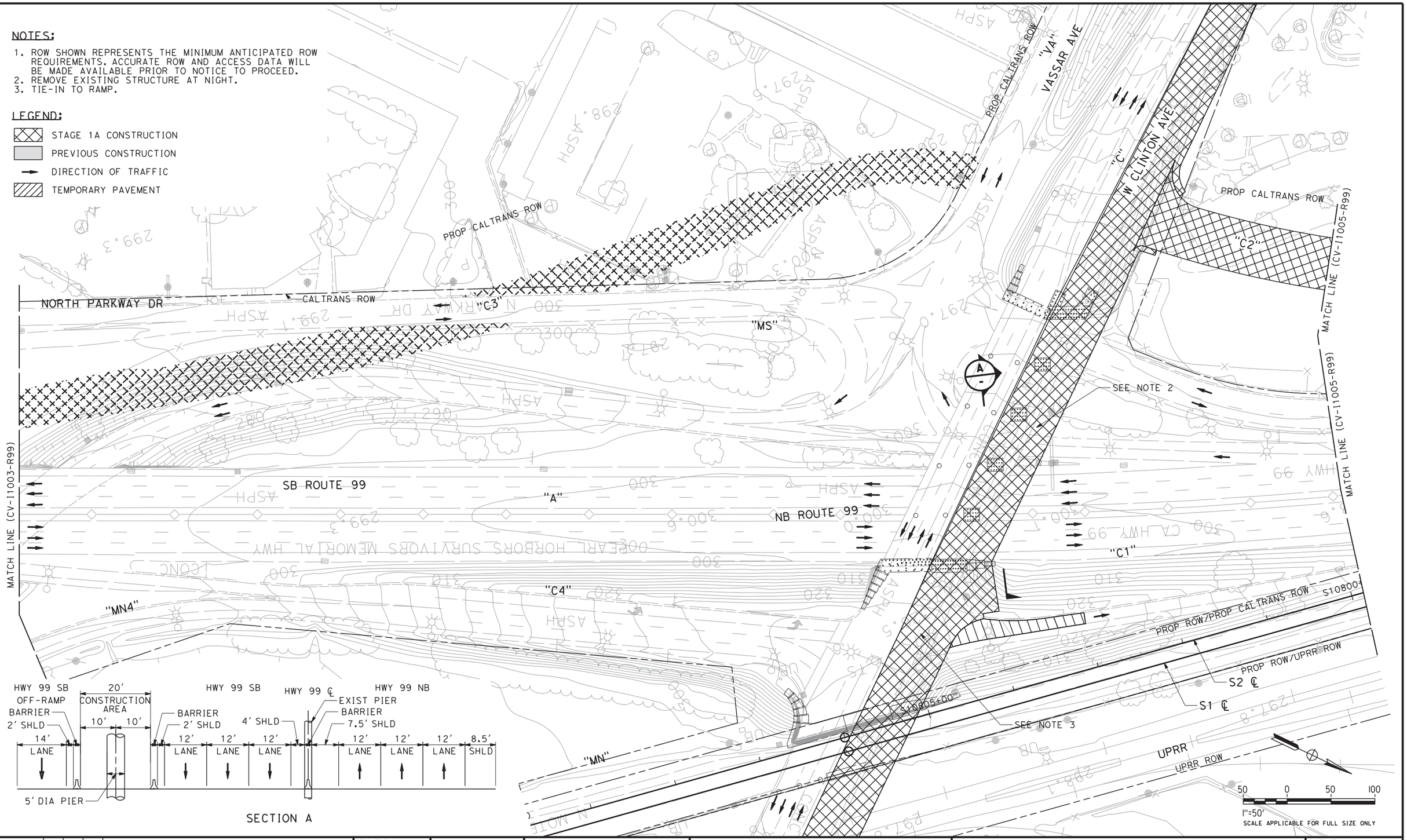

REV	DATE	BY	CHK	APP	DESCRIPTION

DESIGNED BY C. BENSON
DRAWN BY R. MEZA
CHECKED BY L. HEUSTON
IN CHARGE F. NOBARI
DATE 2/17/12

PROPOSED PRELIMINARY DESIGN

NOT FOR CONSTRUCTION

AECOM Technical Services, Inc.
2020 L Street, Suite 300
Sacramento, CA 95811
CH2MHILL

CALIFORNIA HIGH-SPEED RAIL AUTHORITY

CALIFORNIA HIGH-SPEED TRAIN PROJECT
SIERRA SUBDIVISION
PACKAGE 1A
CONSTRUCTION STAGING
STAGE 1A
SR 99 RE-ALIGNMENT

CONTRACT NO.
DRAWING NO. CV-I1004-R99
SCALE AS SHOWN
SHEET NO.

sleong 2/13/2012 10:06:35 AM CAHSRP-R1.TBL CHSR_half_black-pdf995.pt3 C:\Documents and Settings\sleong\My Documents\NDMProj\356751 - California High Speed Rail - SR99 Improvements\1S-CV-I1004-STG1A-R99

ychiu 11/15/2011 10:43:13 PM CAHSRP-r1.tbl CHSR_half_black.plt C:\Documents and Settings\ychiu\My Documents\NDMProj\356751 - California High Speed Rail - SR99 Improvements\15-CV-I1005-STG1A-R99.

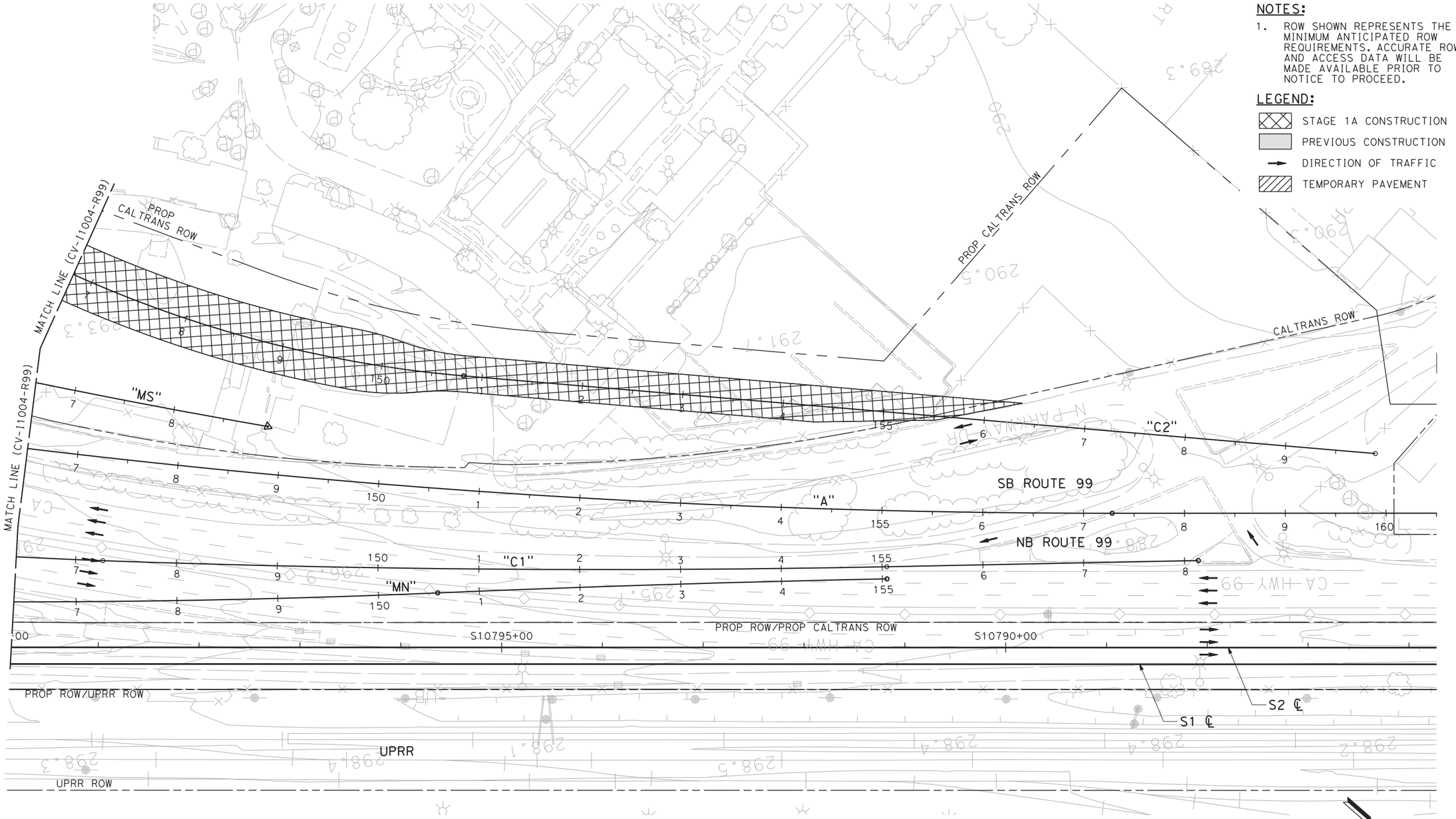

NOTES:

1. ROW SHOWN REPRESENTS THE MINIMUM ANTICIPATED ROW REQUIREMENTS. ACCURATE ROW AND ACCESS DATA WILL BE MADE AVAILABLE PRIOR TO NOTICE TO PROCEED.

LEGEND:

- STAGE 1A CONSTRUCTION
- PREVIOUS CONSTRUCTION
- DIRECTION OF TRAFFIC
- TEMPORARY PAVEMENT

50 0 50 100

1"=50'

SCALE APPLICABLE FOR FULL SIZE ONLY

REV	DATE	BY	CHK	APP	DESCRIPTION

DESIGNED BY C. BENSON
DRAWN BY R. MEZA
CHECKED BY L. HEUSTON
IN CHARGE F. NOBARI
DATE 11/22/11

PROPOSED PRELIMINARY DESIGN

NOT FOR CONSTRUCTION

AECOM Technical Services, Inc.
2020 L Street, Suite 300
Sacramento, CA 95811

CH2MHILL

CALIFORNIA HIGH-SPEED RAIL AUTHORITY

CALIFORNIA HIGH-SPEED TRAIN PROJECT
SIERRA SUBDIVISION

PACKAGE 1A
CONSTRUCTION STAGING
STAGE 1A
SR 99 RE-ALIGNMENT

CONTRACT NO.

DRAWING NO. CV-I1005-R99

SCALE AS SHOWN

SHEET NO.

2/13/2012 10:08:32 AM CAHSRP-R1.TBL CHSR_half_black-pdf995.pc3 C:\Documents and Settings\sleong\My Documents\NDMProj\356751 - California High Speed Rail - SR99 Improvements\1S-CV-I1006-STG1A-R99
sleong

NOTES:

1. ROW SHOWN REPRESENTS THE MINIMUM ANTICIPATED ROW REQUIREMENTS. ACCURATE ROW AND ACCESS DATA WILL BE MADE AVAILABLE PRIOR TO NOTICE TO
2. PROCEED. TEMPORARILY CLOSE RAMP AND TIE-IN.

LEGEND:

- STAGE 1A CONSTRUCTION
- PREVIOUS CONSTRUCTION
- DIRECTION OF TRAFFIC
- TEMPORARY PAVEMENT

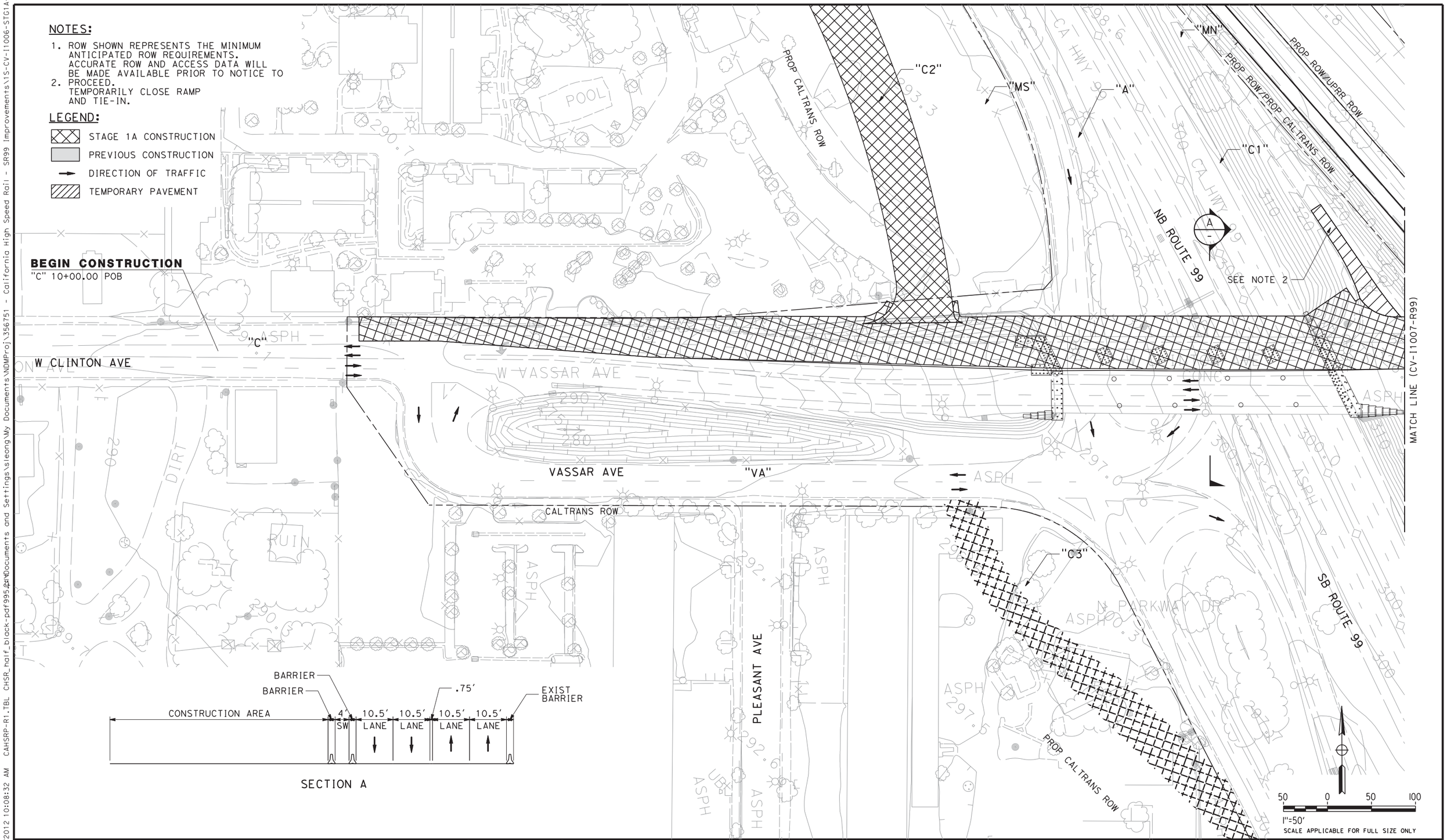

SECTION A

REV	DATE	BY	CHK	APP	DESCRIPTION

DESIGNED BY C. BENSON
DRAWN BY R. MEZA
CHECKED BY L. HEUSTON
IN CHARGE F. NOBARI
DATE 2/17/12

PROPOSED PRELIMINARY DESIGN

NOT FOR CONSTRUCTION

AECOM Technical Services, Inc.
2020 L Street, Suite 300
Sacramento, CA 95811
CH2MHILL

CALIFORNIA HIGH-SPEED RAIL AUTHORITY

CALIFORNIA HIGH-SPEED TRAIN PROJECT
SIERRA SUBDIVISION
PACKAGE 1A
CONSTRUCTION STAGING
STAGE 1A
SR 99 RE-ALIGNMENT

CONTRACT NO.
DRAWING NO. CV-I1006-R99
SCALE AS SHOWN
SHEET NO.

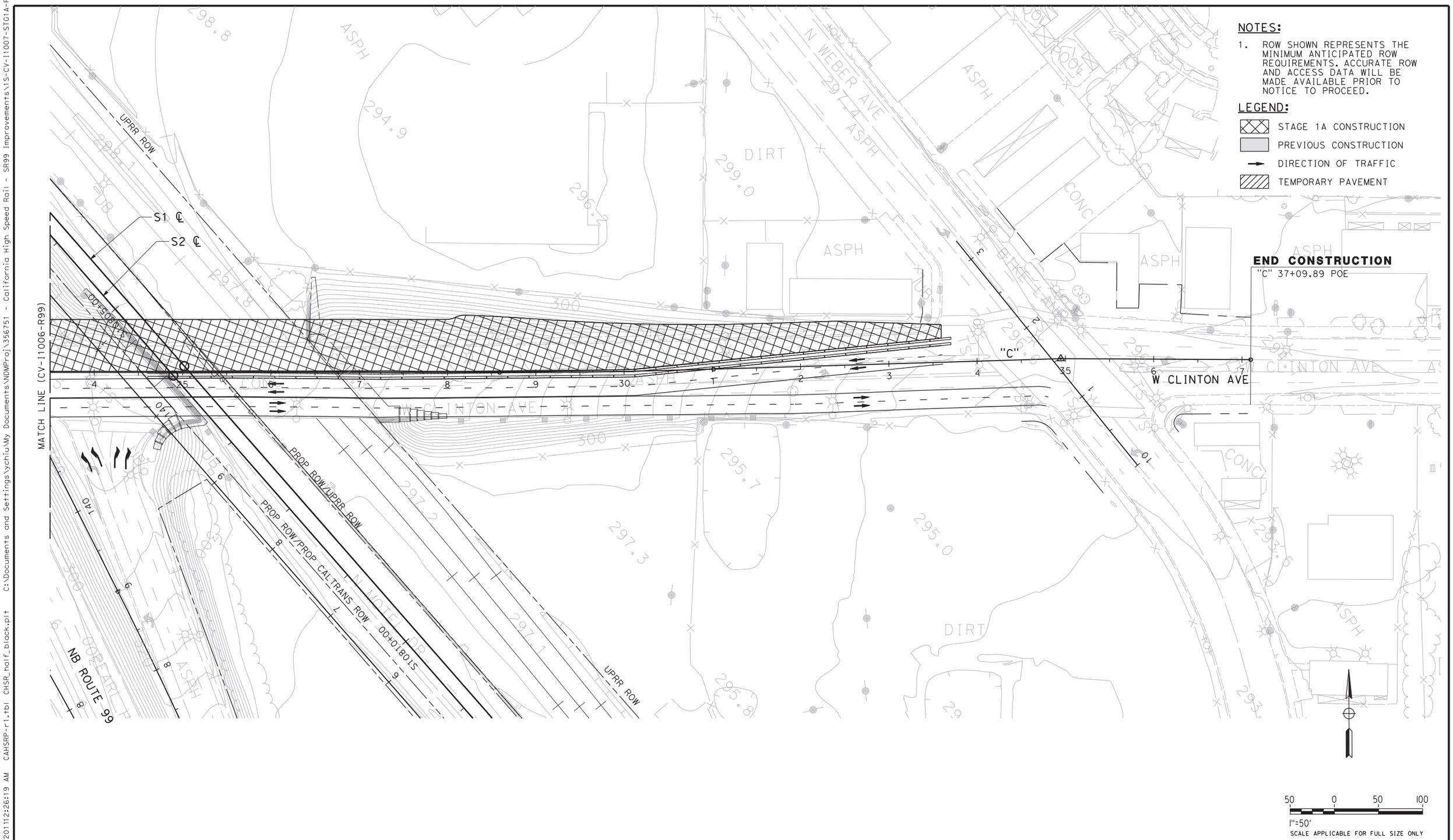

REV	DATE	BY	CHK	APP	DESCRIPTION

DESIGNED BY C. BENSON
DRAWN BY R. MEZA
CHECKED BY L. HEUSTON
IN CHARGE F. NOBARI
DATE 11/22/11

PROPOSED PRELIMINARY DESIGN

NOT FOR CONSTRUCTION

AECOM Technical Services, Inc.
2020 L Street, Suite 300
Sacramento, CA 95811

CH2MHILL

CALIFORNIA HIGH-SPEED RAIL AUTHORITY

CALIFORNIA HIGH-SPEED TRAIN PROJECT
SIERRA SUBDIVISION
PACKAGE 1A
CONSTRUCTION STAGING
STAGE 1A
SR 99 RE-ALIGNMENT

CONTRACT NO.
DRAWING NO. CV-I1007-R99
SCALE AS SHOWN
SHEET NO.

ychiu 11/16/2011 2:26:19 AM CAHSRP-r1.tbl CHSR_half_black.plt C:\Documents and Settings\ychiu\My Documents\NDMProj\356751 - California High Speed Rail - SR99 Improvements\15-CV-I1007-STG1A-R99.

NOTES:

1. ROW SHOWN REPRESENTS THE MINIMUM ANTICIPATED ROW REQUIREMENTS. ACCURATE ROW AND ACCESS DATA WILL BE MADE AVAILABLE PRIOR TO NOTICE TO PROCEED.
2. SHIFT SB ROUTE 99 LANES FOLLOWING REMOVAL OF EXISTING PIERS.
3. SHIFT TRAFFIC AS NECESSARY AND TIE-IN RAMP AT END OF STAGE.

LEGEND:

- STAGE 1B CONSTRUCTION
- PREVIOUS CONSTRUCTION
- DIRECTION OF TRAFFIC
- TEMPORARY PAVEMENT

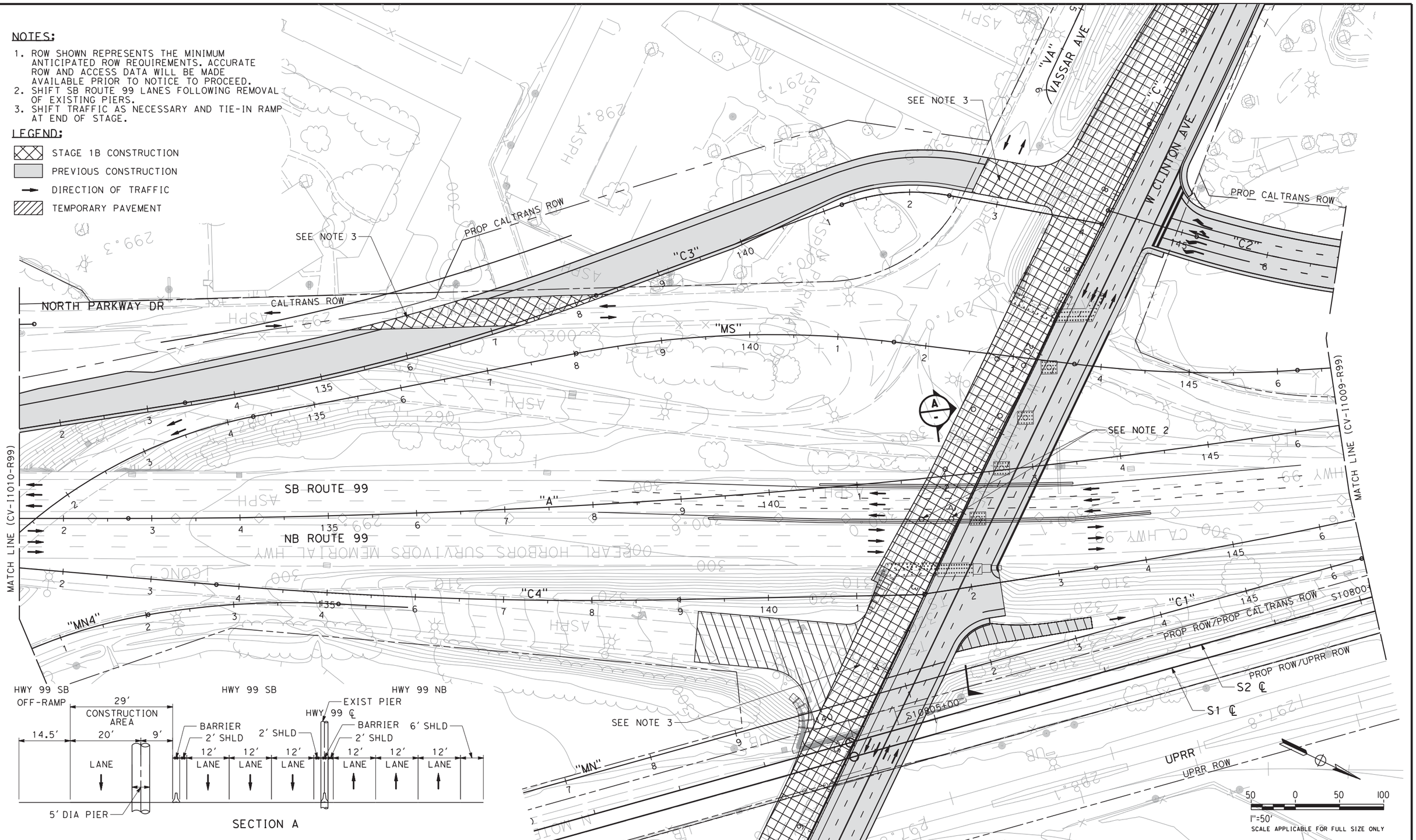

REV	DATE	BY	CHK	APP	DESCRIPTION

DESIGNED BY C. BENSON
DRAWN BY R. MEZA
CHECKED BY L. HEUSTON
IN CHARGE F. NOBARI
DATE 2/17/12

PROPOSED PRELIMINARY DESIGN

NOT FOR CONSTRUCTION

AECOM Technical Services, Inc.
2020 L Street, Suite 300
Sacramento, CA 95811

CH2MHILL

CALIFORNIA HIGH-SPEED RAIL AUTHORITY

CALIFORNIA HIGH-SPEED TRAIN PROJECT
SIERRA SUBDIVISION
PACKAGE 1A
CONSTRUCTION STAGING
STAGE 1B
SR 99 RE-ALIGNMENT

CONTRACT NO.
DRAWING NO. CV-I1008-R99
SCALE AS SHOWN
SHEET NO.

sleong 2/14/2012 10:58:27 AM CAHSRP-R1.TBL CHSR_half_black-pdf995.pc3 C:\Documents and Settings\sleong\My Documents\NDMProj\356751 - California High Speed Rail - SR99 Improvements\1S-CV-I1008-STG1B-R99

2/13/2012 10:53:59 AM CAHSRP-R1.TBL CHSR_half_black-pdf995.pc*Documents and Settings\sleong\My Documents\NDMProj\356751 - California High Speed Rail - SR99 Improvements\1S-CV-I1009-STG1B-R99
sleong

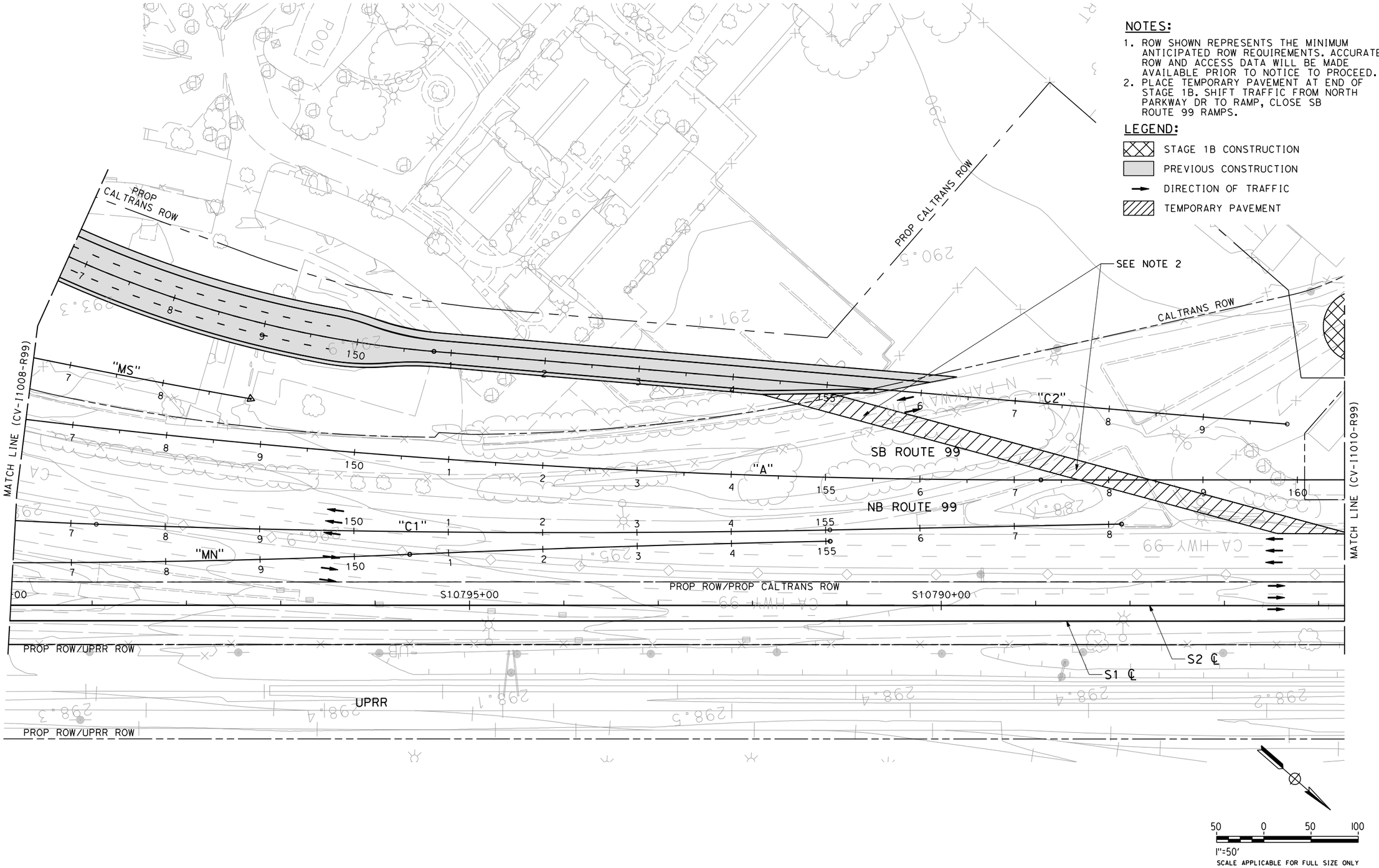

NOTES:

1. ROW SHOWN REPRESENTS THE MINIMUM ANTICIPATED ROW REQUIREMENTS. ACCURATE ROW AND ACCESS DATA WILL BE MADE AVAILABLE PRIOR TO NOTICE TO PROCEED.
2. PLACE TEMPORARY PAVEMENT AT END OF STAGE 1B. SHIFT TRAFFIC FROM NORTH PARKWAY DR TO RAMP, CLOSE SB ROUTE 99 RAMPS.

LEGEND:

- STAGE 1B CONSTRUCTION
- PREVIOUS CONSTRUCTION
- DIRECTION OF TRAFFIC
- TEMPORARY PAVEMENT

REV	DATE	BY	CHK	APP	DESCRIPTION

DESIGNED BY C. BENSON
DRAWN BY R. MEZA
CHECKED BY L. HEUSTON
IN CHARGE F. NOBARI
DATE 2/17/12

PROPOSED PRELIMINARY DESIGN

NOT FOR CONSTRUCTION

AECOM Technical Services, Inc.
2020 L Street, Suite 300
Sacramento, CA 95811
CH2MHILL

CALIFORNIA HIGH-SPEED RAIL AUTHORITY

CALIFORNIA HIGH-SPEED TRAIN PROJECT
SIERRA SUBDIVISION
PACKAGE 1A
CONSTRUCTION STAGING
STAGE 1B
SR 99 RE-ALIGNMENT

CONTRACT NO.
DRAWING NO. CV-I1009-R99
SCALE AS SHOWN
SHEET NO.

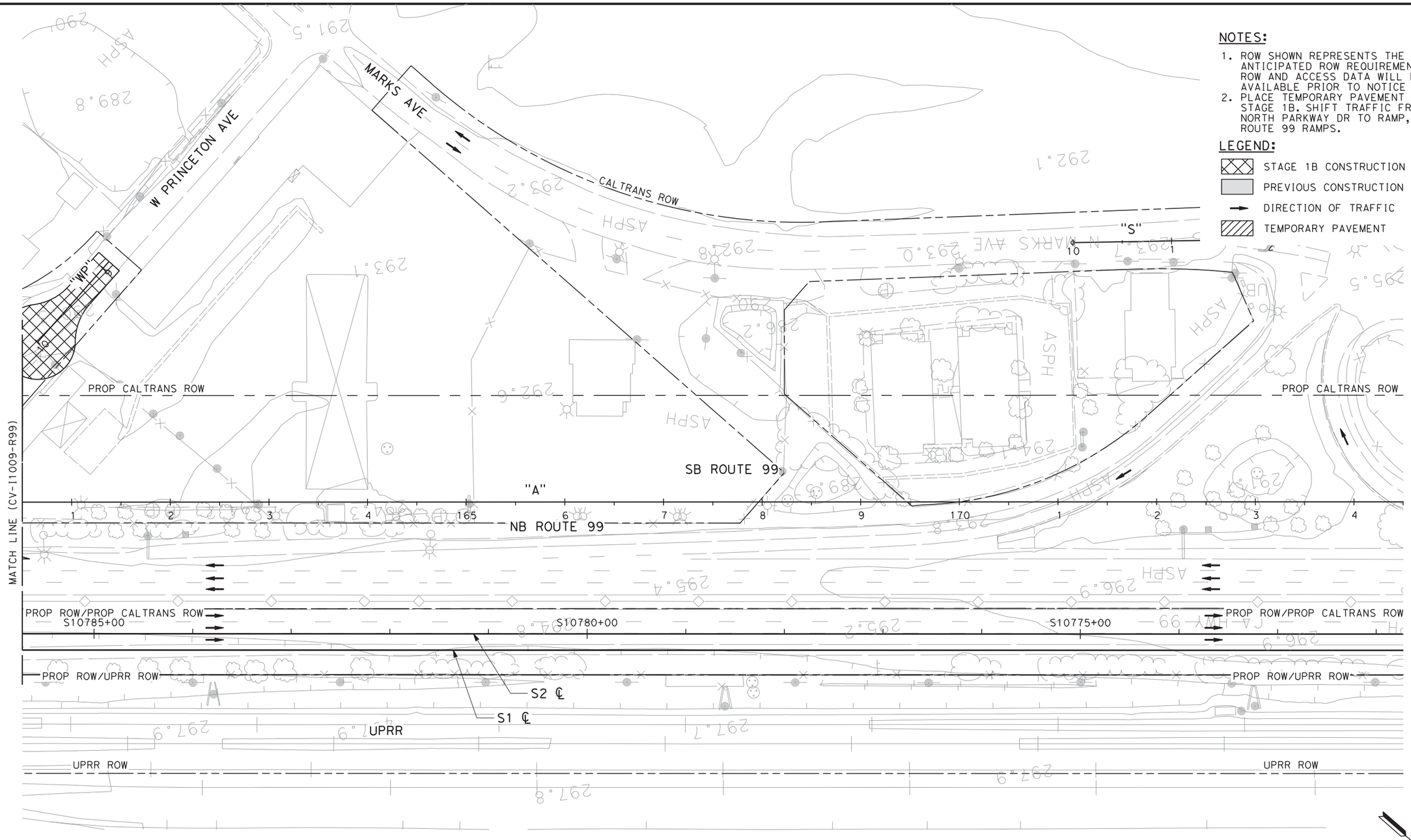

NOTES:

1. ROW SHOWN REPRESENTS THE MINIMUM ANTICIPATED ROW REQUIREMENTS. ACCURATE ROW AND ACCESS DATA WILL BE MADE AVAILABLE PRIOR TO NOTICE TO PROCEED.
2. PLACE TEMPORARY PAVEMENT AT END OF STAGE 1B. SHIFT TRAFFIC FROM NORTH PARKWAY DR TO RAMP, CLOSE SB ROUTE 99 RAMPS.

LEGEND:

- STAGE 1B CONSTRUCTION
- PREVIOUS CONSTRUCTION
- DIRECTION OF TRAFFIC
- TEMPORARY PAVEMENT

50 0 50 100

1"=50'

SCALE APPLICABLE FOR FULL SIZE ONLY

REV	DATE	BY	CHK	APP	DESCRIPTION

DESIGNED BY C. BENSON
DRAWN BY R. MEZA
CHECKED BY L. HEUSTON
IN CHARGE F. NOBARI
DATE 2/17/12

PROPOSED PRELIMINARY DESIGN

NOT FOR CONSTRUCTION

AECOM Technical Services, Inc.
2020 L Street, Suite 300
Sacramento, CA 95811

CH2MHILL

CALIFORNIA HIGH-SPEED RAIL AUTHORITY

CALIFORNIA HIGH-SPEED TRAIN PROJECT
SIERRA SUBDIVISION
PACKAGE 1A
CONSTRUCTION STAGING
STAGE 1B
SR 99 RE-ALIGNMENT

CONTRACT NO.
DRAWING NO. CV-I1010-R99
SCALE AS SHOWN
SHEET NO.

sleong 2/13/2012 10:56:13 AM CAHSRP-R1.TBL CHSR_half_black-pdf995.pc3 C:\Documents and Settings\sleong\My Documents\NDMProj\356751 - California High Speed Rail - SR99 Improvements\1S-CV-I1010-STG1B-R99

NOTES:

1. ROW SHOWN REPRESENTS THE MINIMUM ANTICIPATED ROW REQUIREMENTS. ACCURATE ROW AND ACCESS DATA WILL BE MADE AVAILABLE PRIOR TO NOTICE TO PROCEED.
2. TEMPORARILY CLOSE VASSAR AVE AND NORTH PARKWAY DR AND TIE-IN AT END OF STAGE 1B.
3. SHIFT TRAFFIC AS NECESSARY TO CONSTRUCT TIE-IN ALONG CLINTON AVE AND VASSAR AVE.

LEGEND:

- STAGE 1B CONSTRUCTION
- PREVIOUS CONSTRUCTION
- DIRECTION OF TRAFFIC
- TEMPORARY PAVEMENT

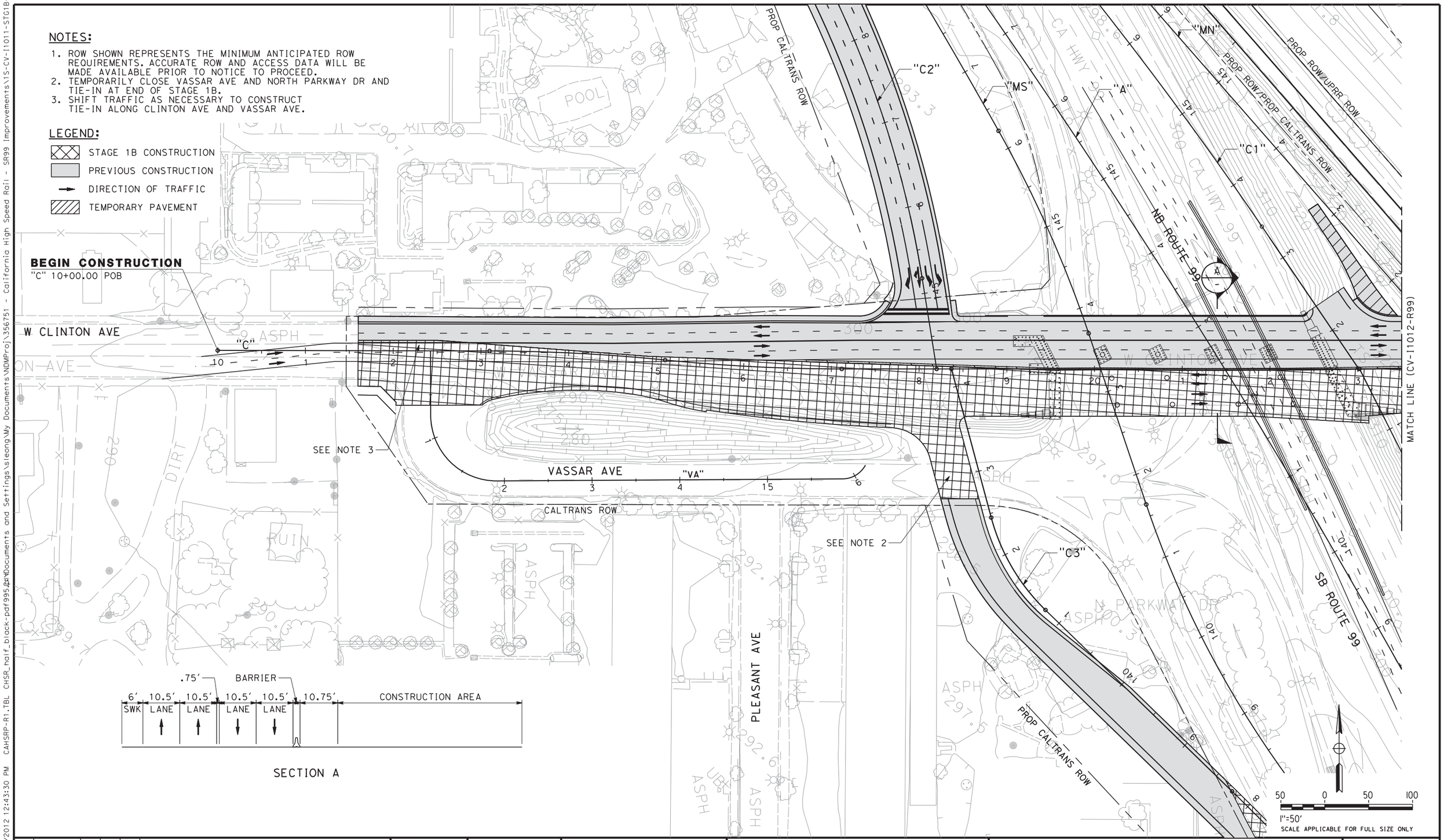

SECTION A

REV	DATE	BY	CHK	APP	DESCRIPTION

DESIGNED BY C. BENSON
DRAWN BY R. MEZA
CHECKED BY L. HEUSTON
IN CHARGE F. NOBARI
DATE 2/17/12

PROPOSED PRELIMINARY DESIGN

NOT FOR CONSTRUCTION

AECOM Technical Services, Inc.
2020 L Street, Suite 300
Sacramento, CA 95811
CH2MHILL

CALIFORNIA HIGH-SPEED RAIL AUTHORITY

CALIFORNIA HIGH-SPEED TRAIN PROJECT
SIERRA SUBDIVISION
PACKAGE 1A
CONSTRUCTION STAGING
STAGE 1B
SR 99 RE-ALIGNMENT

CONTRACT NO.
DRAWING NO. CV-I1011-R99
SCALE AS SHOWN
SHEET NO.

2/13/2012 12:43:30 PM CAHSRP-R1.TBL CHSR_half_black-pdf995.pc3 C:\Documents and Settings\sleong\My Documents\NDMProj\356751 - California High Speed Rail - SR99 Improvements\1S-CV-I1011-STG1B-R99
sleong

sleong 2/13/2012 12:57:57 PM CAHSRP-R1.TBL CHSR_half_black-pdf995.pt Documents and Settings\sleong\My Documents\NDMProj\356751 - California High Speed Rail - SR99 Improvements\1S-CV-I1012-STG1B-R99

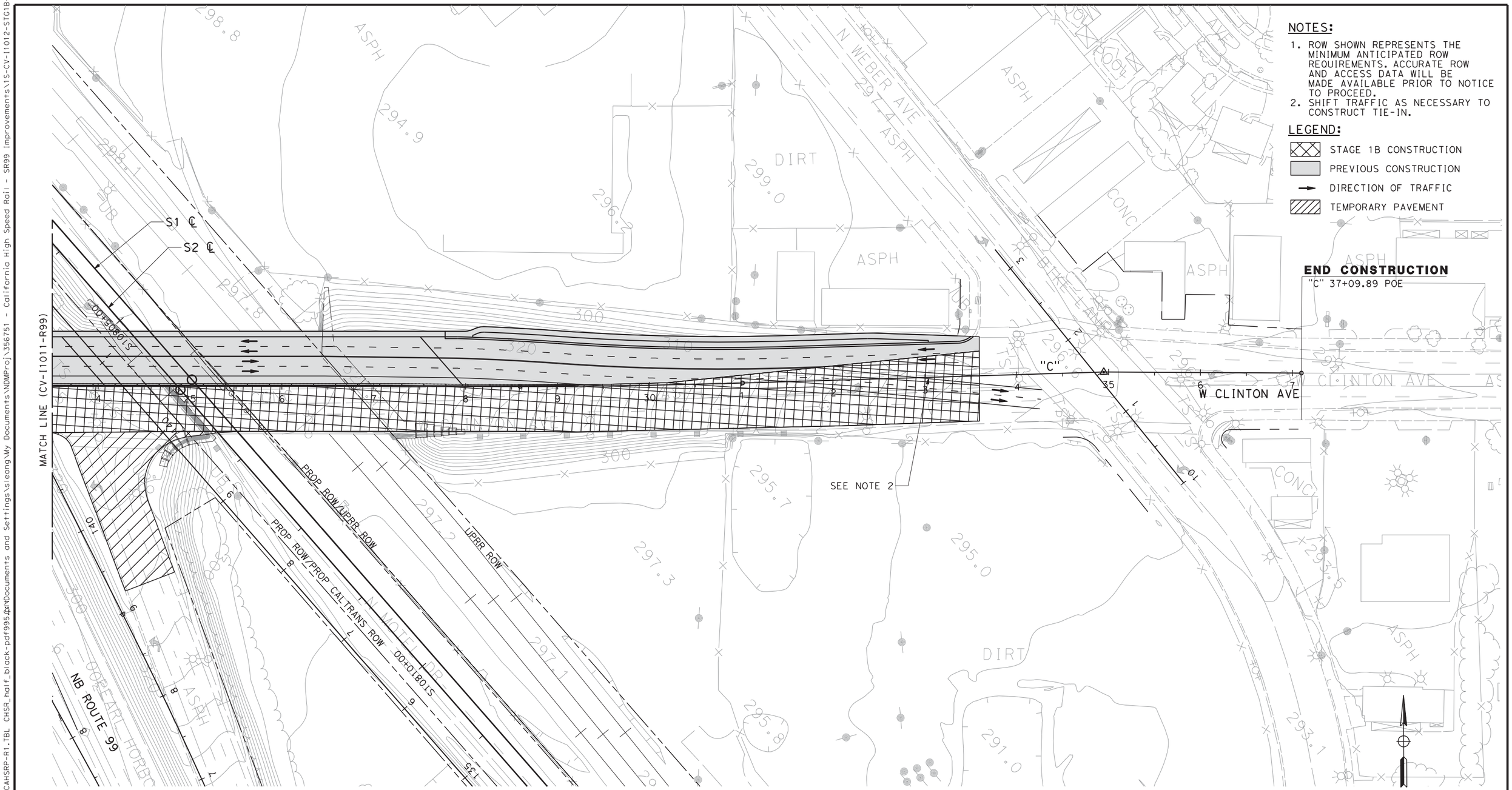

REV	DATE	BY	CHK	APP	DESCRIPTION

DESIGNED BY C. BENSON
DRAWN BY R. MEZA
CHECKED BY L. HEUSTON
IN CHARGE F. NOBARI
DATE 2/17/12

PROPOSED PRELIMINARY DESIGN

NOT FOR CONSTRUCTION

AECOM Technical Services, Inc.
2020 L Street, Suite 300
Sacramento, CA 95811

CH2MHILL

CALIFORNIA HIGH-SPEED RAIL AUTHORITY

CALIFORNIA HIGH-SPEED TRAIN PROJECT
SIERRA SUBDIVISION
PACKAGE 1A
CONSTRUCTION STAGING
STAGE 1B
SR 99 RE-ALIGNMENT

CONTRACT NO.
DRAWING NO. CV-I1012-R99
SCALE AS SHOWN
SHEET NO.

NOTES:

1. ROW SHOWN REPRESENTS THE MINIMUM ANTICIPATED ROW REQUIREMENTS. ACCURATE ROW AND ACCESS DATA WILL BE MADE AVAILABLE PRIOR TO NOTICE TO PROCEED.

LEGEND:

- STAGE 1C CONSTRUCTION
- PREVIOUS CONSTRUCTION
- DIRECTION OF TRAFFIC
- TEMPORARY PAVEMENT

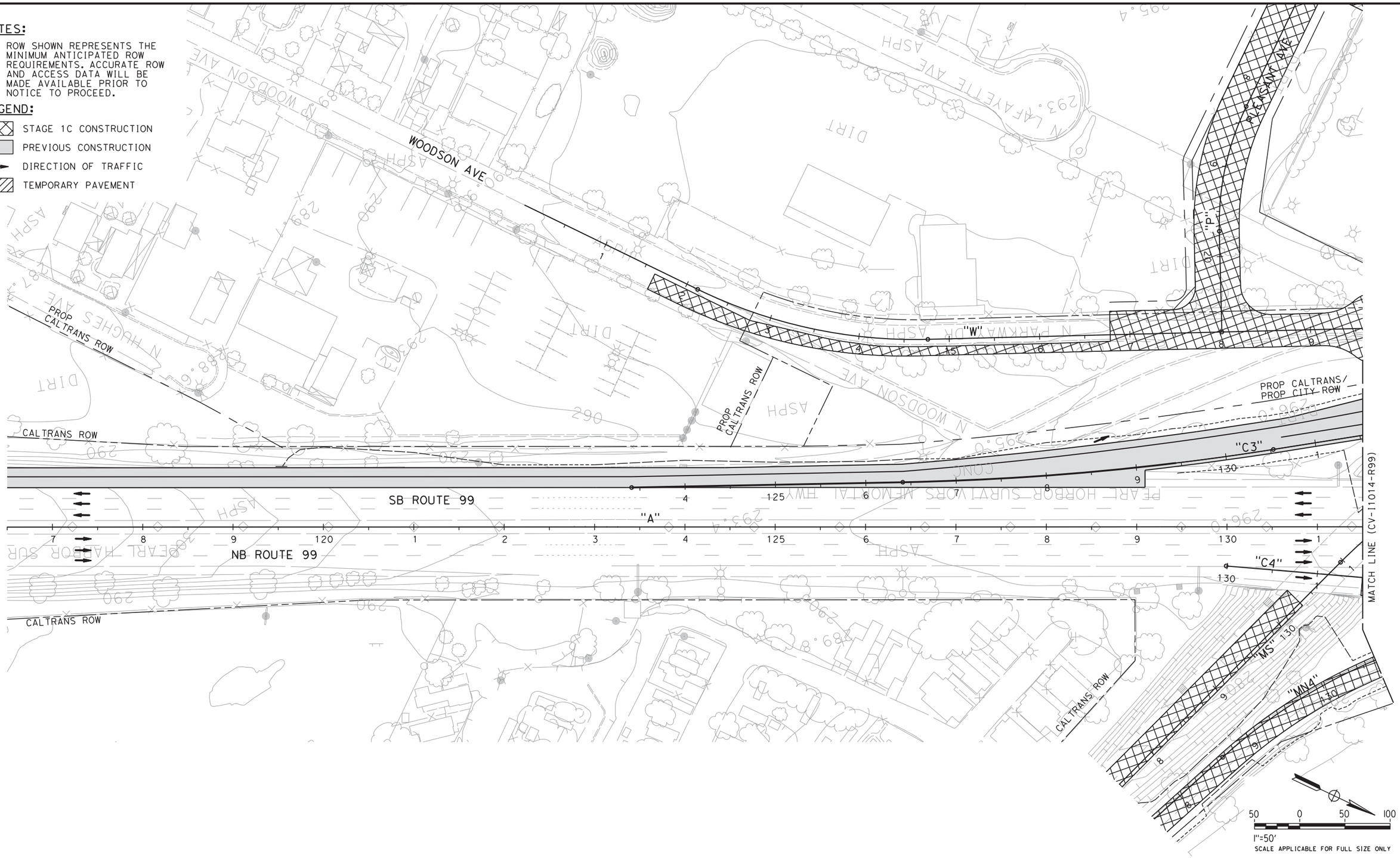

REV	DATE	BY	CHK	APP	DESCRIPTION

DESIGNED BY C. BENSON
DRAWN BY R. MEZA
CHECKED BY L. HEUSTON
IN CHARGE F. NOBARI
DATE 2/17/12

PROPOSED PRELIMINARY DESIGN

NOT FOR CONSTRUCTION

AECOM Technical Services, Inc.
2020 L Street, Suite 300
Sacramento, CA 95811

CH2MHILL

CALIFORNIA HIGH-SPEED RAIL AUTHORITY

CALIFORNIA HIGH-SPEED TRAIN PROJECT
SIERRA SUBDIVISION
PACKAGE 1A
CONSTRUCTION STAGING
STAGE 1C
SR 99 RE-ALIGNMENT

CONTRACT NO.
DRAWING NO. CV-I1013-R99
SCALE AS SHOWN
SHEET NO.

sleong 2/14/2012 10:59:30 AM CAHSRP-R1.TBL CHSR_half_black-pdf995.pt N:\Documents and Settings\sleong\My Documents\NDMProj\356751 - California High Speed Rail - SR99 Improvements\1S-CV-I1013-STG1C-R99

NOTES:

1. ROW SHOWN REPRESENTS THE MINIMUM ANTICIPATED ROW REQUIREMENTS. ACCURATE ROW AND ACCESS DATA WILL BE MADE AVAILABLE PRIOR TO NOTICE TO PROCEED.
2. SB ROUTE 99 OFFRAMP TO BE CLOSED. DETOUR TO MCKINLEY BLVD OFFRAMP TO N WEBER AVE.
3. NORTH PARKWAY DR, VASSAR AVE, AND SB ROUTE 99 ON AND OFF RAMPS CLOSED.
4. SB ROUTE 99 TO SB GOLDEN STATE BLVD RAMP CLOSED. DETOUR TO N WEBER TO MCKINLEY BLVD TO GOLDEN STATE BLVD.

LEGEND:

- STAGE 1C CONSTRUCTION
- PREVIOUS CONSTRUCTION
- DIRECTION OF TRAFFIC
- TEMPORARY PAVEMENT

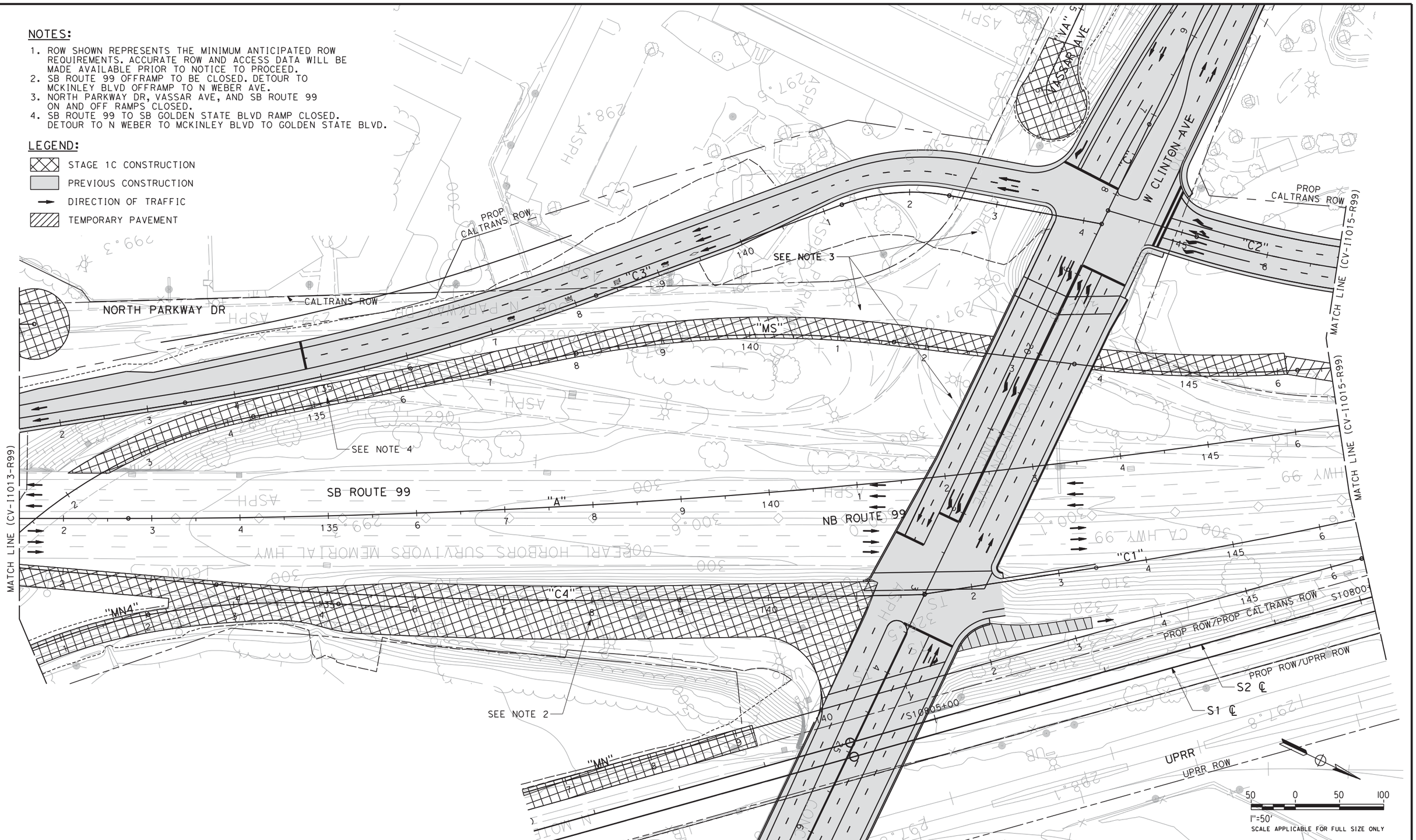

REV	DATE	BY	CHK	APP	DESCRIPTION

DESIGNED BY C. BENSON
DRAWN BY R. MEZA
CHECKED BY L. HEUSTON
IN CHARGE F. NOBARI
DATE 2/17/12

PROPOSED PRELIMINARY DESIGN

NOT FOR CONSTRUCTION

AECOM Technical Services, Inc.
2020 L Street, Suite 300
Sacramento, CA 95811

CH2MHILL

CALIFORNIA HIGH-SPEED RAIL AUTHORITY

CALIFORNIA HIGH-SPEED TRAIN PROJECT
SIERRA SUBDIVISION
PACKAGE 1A
CONSTRUCTION STAGING
STAGE 1C
SR 99 RE-ALIGNMENT

CONTRACT NO.
DRAWING NO. CV-I1014-R99
SCALE AS SHOWN
SHEET NO.

2/14/2012 11:00:17 AM CAHSRP-R1.TBL CHSR_half_black-pdf995.pc3 C:\Documents and Settings\sleong\My Documents\NDMProj\356751 - California High Speed Rail - SR99 Improvements\1S-CV-I1014-STG1C-R99 sleong

sleong 2/13/2012 1:00:24 PM CAHSRP-R1.TBL CHSR_half_black-pdf995.pt C:\Documents and Settings\sleong\My Documents\NDMProj\356751 - California High Speed Rail - SR99 Improvements\1S-CV-I1015-STG1C-R99

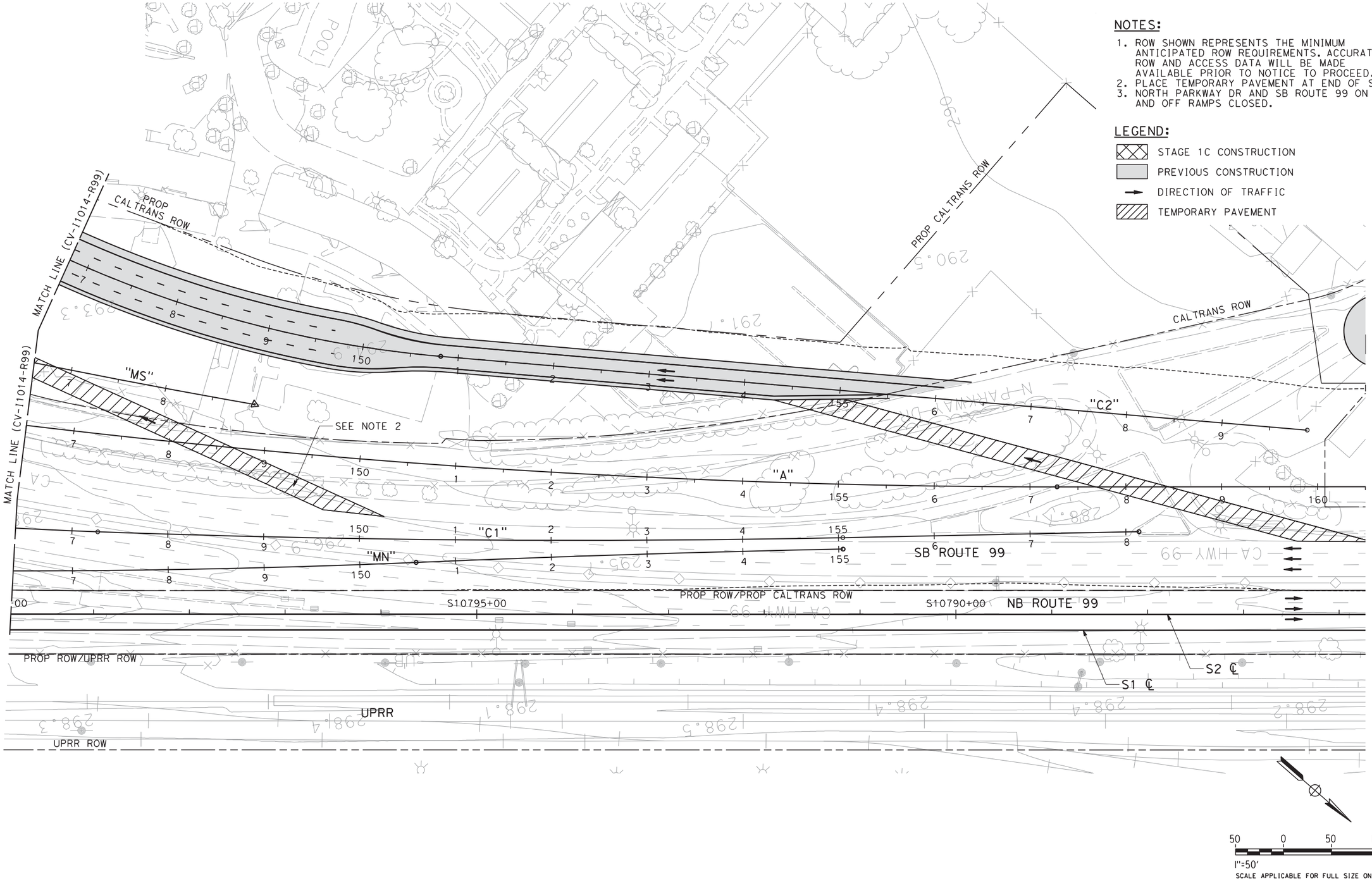

NOTES:

1. ROW SHOWN REPRESENTS THE MINIMUM ANTICIPATED ROW REQUIREMENTS. ACCURATE ROW AND ACCESS DATA WILL BE MADE AVAILABLE PRIOR TO NOTICE TO PROCEED.
2. PLACE TEMPORARY PAVEMENT AT END OF STAGE.
3. NORTH PARKWAY DR AND SB ROUTE 99 ON AND OFF RAMPS CLOSED.

LEGEND:

- STAGE 1C CONSTRUCTION
- PREVIOUS CONSTRUCTION
- DIRECTION OF TRAFFIC
- TEMPORARY PAVEMENT

REV	DATE	BY	CHK	APP	DESCRIPTION

DESIGNED BY C. BENSON
DRAWN BY R. MEZA
CHECKED BY L. HEUSTON
IN CHARGE F. NOBARI
DATE 2/17/12

PROPOSED PRELIMINARY DESIGN

NOT FOR CONSTRUCTION

AECOM Technical Services, Inc.
2020 L Street, Suite 300
Sacramento, CA 95811

CH2MHILL

CALIFORNIA HIGH-SPEED RAIL AUTHORITY

CALIFORNIA HIGH-SPEED TRAIN PROJECT
SIERRA SUBDIVISION
PACKAGE 1A
CONSTRUCTION STAGING
STAGE 1C
SR 99 RE-ALIGNMENT

CONTRACT NO.
DRAWING NO. CV-I1015-R99
SCALE AS SHOWN
SHEET NO.

sleong 2/14/2012 11:18:09 AM CAHSRP-R1.TBL CHSR_half_black-pdf995.pc N:\Documents and Settings\sleong\My Documents\NDMProj\356751 - California High Speed Rail - SR99 Improvements\1S-CV-I1016-STG1C-R99

LEGEND:

- STAGE 1C CONSTRUCTION
- PREVIOUS CONSTRUCTION
- DIRECTION OF TRAFFIC
- TEMPORARY PAVEMENT

NOTES:

1. ROW SHOWN REPRESENTS THE MINIMUM ANTICIPATED ROW REQUIREMENTS. ACCURATE ROW AND ACCESS DATA WILL BE MADE AVAILABLE PRIOR TO NOTICE TO PROCEED.
2. CONSTRUCT N MARKS AVE/SHIELDS AVE AND SHIFT TRAFFIC AS NECESSARY. MAINTAIN ACCESS TO SB ROUTE 99 ON AND OFF RAMPS.
3. NORTH PARKWAY DR AND SB ROUTE 99 ON AND OFF RAMPS CLOSED AT END OF STAGE.

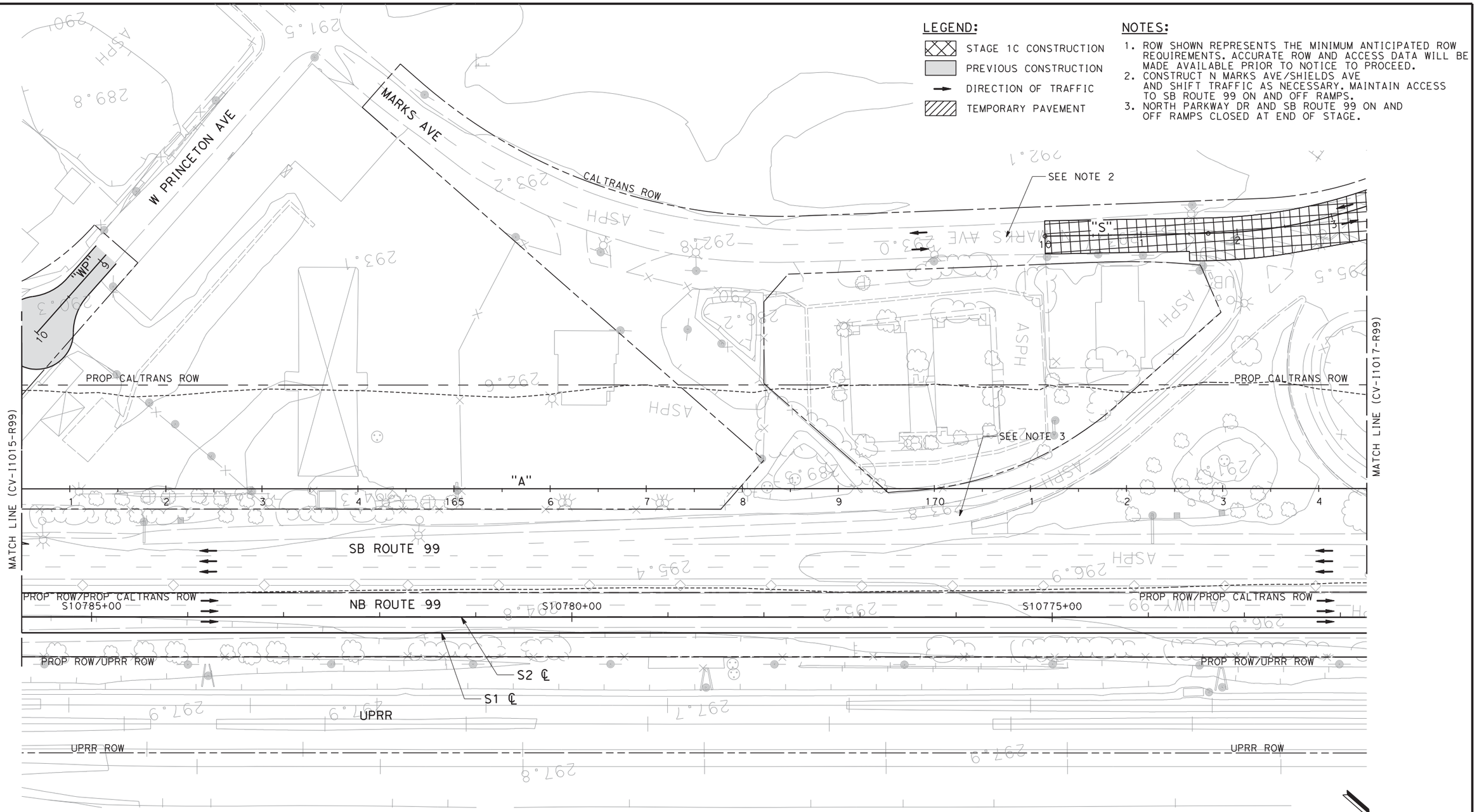

50 0 50 100

1"=50'

SCALE APPLICABLE FOR FULL SIZE ONLY

REV	DATE	BY	CHK	APP	DESCRIPTION

DESIGNED BY C. BENSON
DRAWN BY R. MEZA
CHECKED BY L. HEUSTON
IN CHARGE F. NOBARI
DATE 2/17/12

PROPOSED PRELIMINARY DESIGN

NOT FOR CONSTRUCTION

AECOM Technical Services, Inc.
2020 L Street, Suite 300
Sacramento, CA 95811

CH2MHILL

CALIFORNIA HIGH-SPEED RAIL AUTHORITY

CALIFORNIA HIGH-SPEED TRAIN PROJECT
SIERRA SUBDIVISION
PACKAGE 1A
CONSTRUCTION STAGING
STAGE 1C
SR 99 RE-ALIGNMENT

CONTRACT NO.

DRAWING NO. CV-I1016-R99

SCALE AS SHOWN

SHEET NO.

sleong 2/13/2012 1:06:15 PM CAHSRP-R1.TBL CHSR_half_black-pdf995.pt1 C:\Documents and Settings\sleong\My Documents\NDMProj\356751 - California High Speed Rail - SR99 Improvements\1S-CV-I1017-STG1C-R99

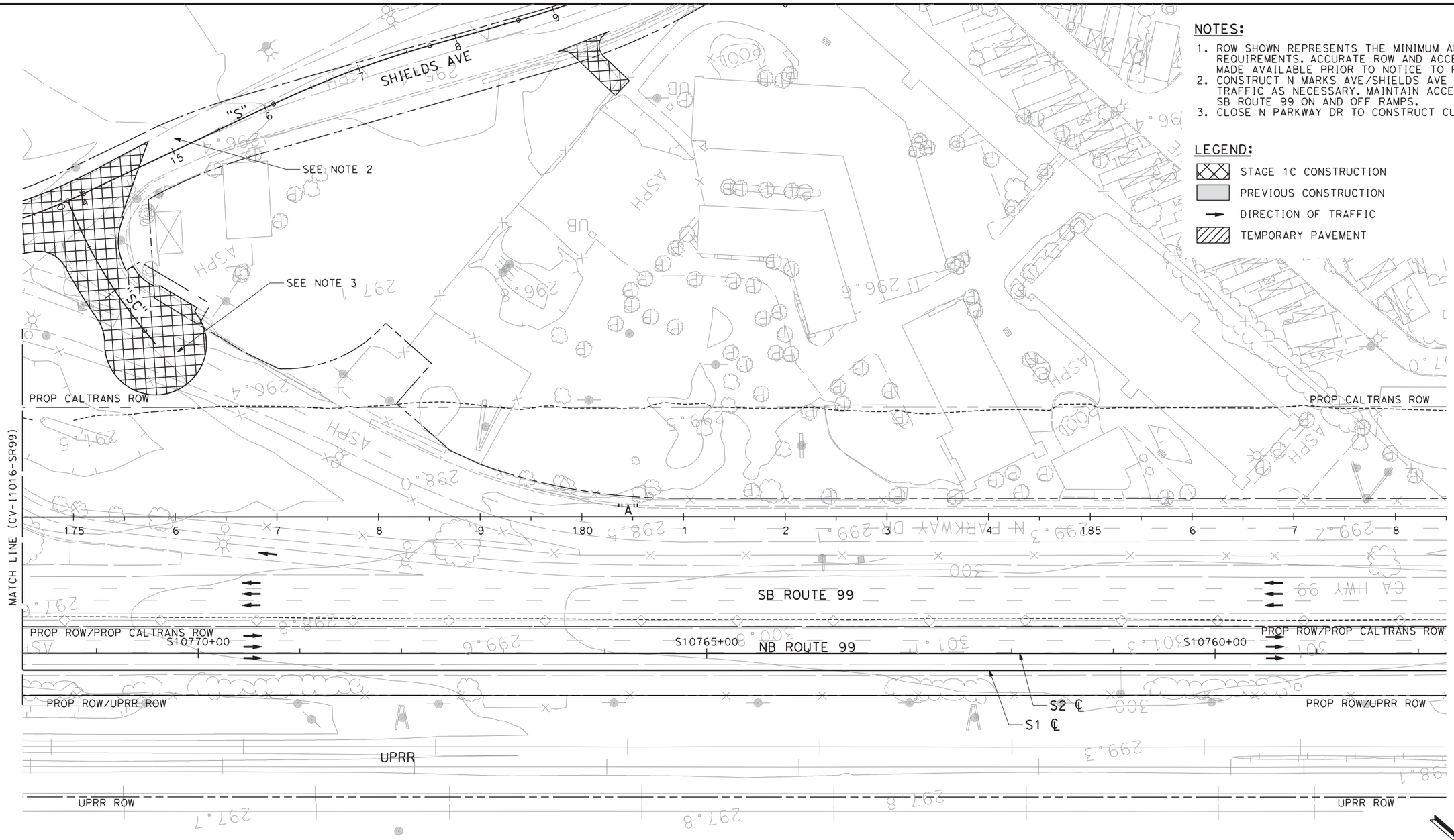

NOTES:

1. ROW SHOWN REPRESENTS THE MINIMUM ANTICIPATED ROW REQUIREMENTS. ACCURATE ROW AND ACCESS DATA WILL BE MADE AVAILABLE PRIOR TO NOTICE TO PROCEED.
2. CONSTRUCT N MARKS AVE/SHIELDS AVE AND SHIFT TRAFFIC AS NECESSARY. MAINTAIN ACCESS TO SB ROUTE 99 ON AND OFF RAMPS.
3. CLOSE N PARKWAY DR TO CONSTRUCT CUL-DE-SAC.

LEGEND:

- STAGE 1C CONSTRUCTION
- PREVIOUS CONSTRUCTION
- DIRECTION OF TRAFFIC
- TEMPORARY PAVEMENT

50 0 50 100

1"=50'

SCALE APPLICABLE FOR FULL SIZE ONLY

REV	DATE	BY	CHK	APP	DESCRIPTION

DESIGNED BY C. BENSON
DRAWN BY R. MEZA
CHECKED BY L. HEUSTON
IN CHARGE F. NOBARI
DATE 2/17/12

PROPOSED PRELIMINARY DESIGN

NOT FOR CONSTRUCTION

AECOM Technical Services, Inc.
2020 L Street, Suite 300
Sacramento, CA 95811

CH2MHILL

CALIFORNIA HIGH-SPEED RAIL AUTHORITY

CALIFORNIA HIGH-SPEED TRAIN PROJECT
SIERRA SUBDIVISION
PACKAGE 1A
CONSTRUCTION STAGING
STAGE 1C
SR 99 RE-ALIGNMENT

CONTRACT NO.

DRAWING NO. CV-I1017-R99

SCALE AS SHOWN

SHEET NO.

NOTES:

1. ROW SHOWN REPRESENTS THE MINIMUM ANTICIPATED ROW REQUIREMENTS. ACCURATE ROW AND ACCESS DATA WILL BE MADE AVAILABLE PRIOR TO NOTICE TO PROCEED.
2. CONSTRUCT VALENTINE AVE, DAKOTA AVE, AND NORTH PARKWAY DR AND SHIFT TRAFFIC AS NECESSARY.

LEGEND:

- STAGE 1C CONSTRUCTION
- PREVIOUS CONSTRUCTION
- DIRECTION OF TRAFFIC
- TEMPORARY PAVEMENT

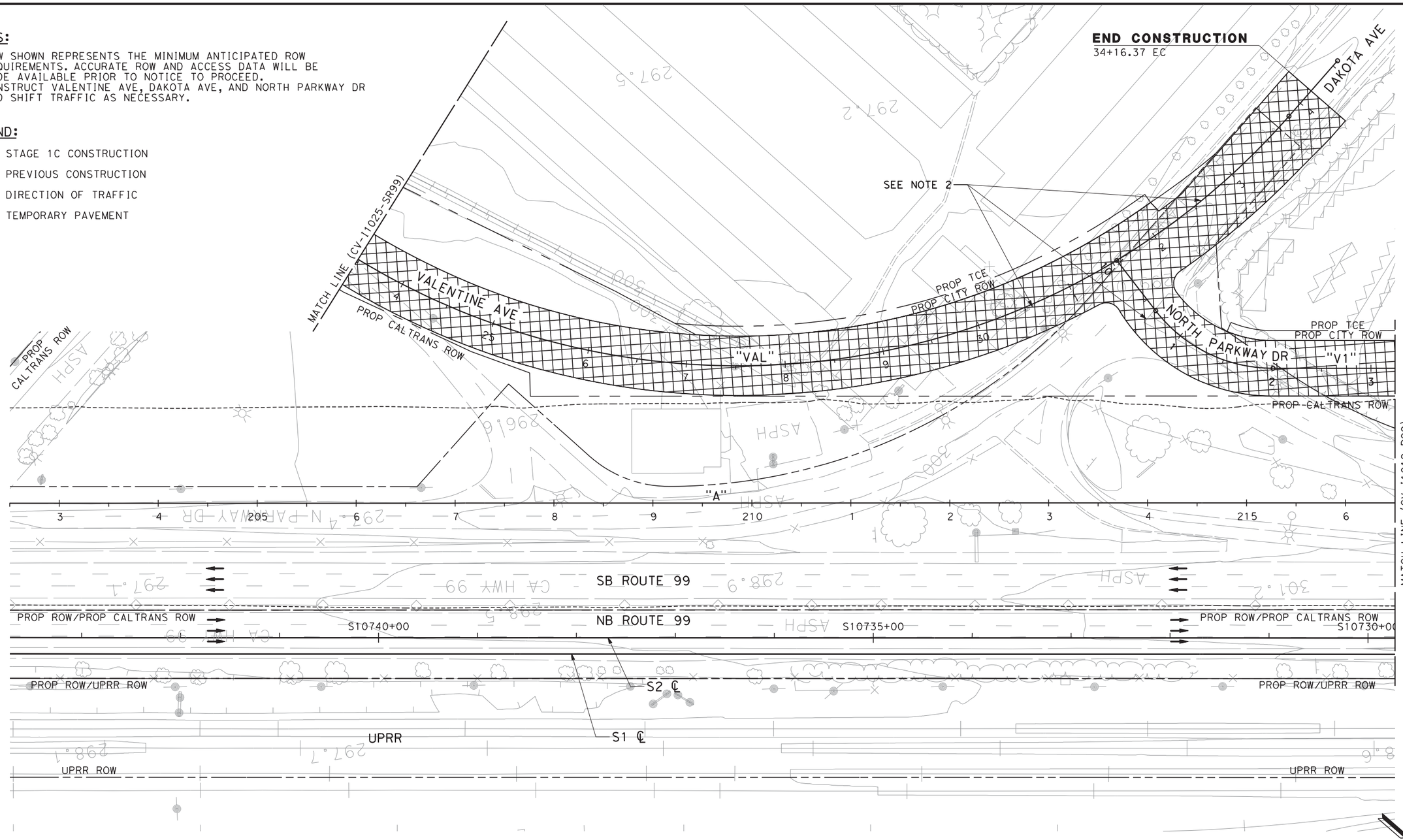

REV	DATE	BY	CHK	APP	DESCRIPTION

DESIGNED BY C. BENSON
DRAWN BY R. MEZA
CHECKED BY L. HEUSTON
IN CHARGE F. NOBARI
DATE 2/17/12

PROPOSED PRELIMINARY DESIGN

NOT FOR CONSTRUCTION

AECOM Technical Services, Inc.
2020 L Street, Suite 300
Sacramento, CA 95811
CH2MHILL

CALIFORNIA HIGH-SPEED RAIL AUTHORITY

CALIFORNIA HIGH-SPEED TRAIN PROJECT
SIERRA SUBDIVISION
PACKAGE 1A
CONSTRUCTION STAGING
STAGE 1C
SR 99 RE-ALIGNMENT

CONTRACT NO.
DRAWING NO. CV-I1018-R99
SCALE AS SHOWN
SHEET NO.

sleong 2/13/2012 1:09:49 PM CAHSRP-R1.TBL CHSR_half_black-pdf995.pc*N Documents and Settings\sleong\My Documents\NDMProj\356751 - California High Speed Rail - SR99 Improvements\1S-CV-I1018-STG1C-R99

sleong 2/13/2012 1:11:39 PM CAHSRP-R1.TBL CHSR_half_black-pdf995.pmp C:\Documents and Settings\sleong\My Documents\NDMProj\356751 - California High Speed Rail - SR99 Improvements\1S-CV-I1019-STG1C-R99

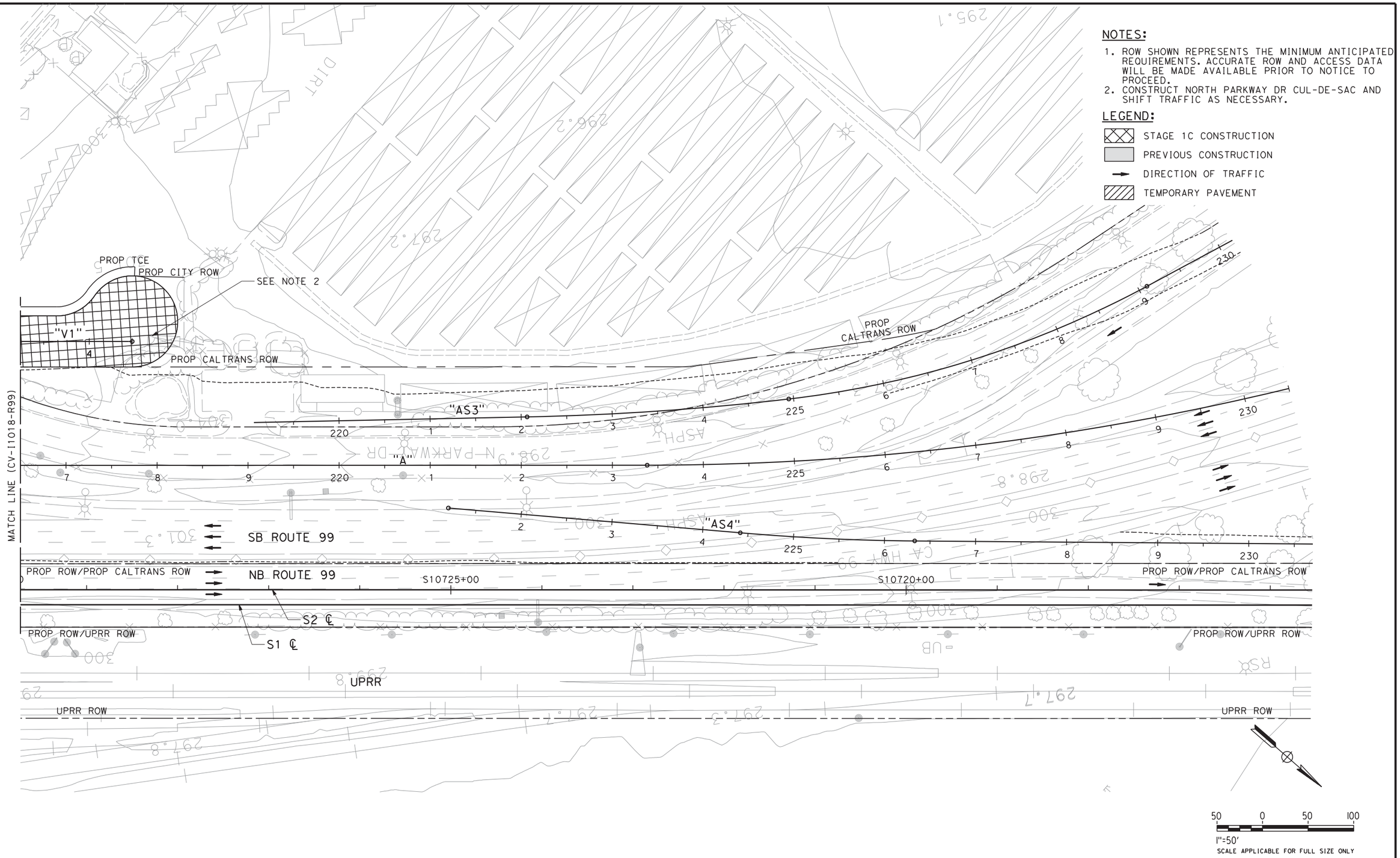

NOTES:

1. ROW SHOWN REPRESENTS THE MINIMUM ANTICIPATED REQUIREMENTS. ACCURATE ROW AND ACCESS DATA WILL BE MADE AVAILABLE PRIOR TO NOTICE TO PROCEED.
2. CONSTRUCT NORTH PARKWAY DR CUL-DE-SAC AND SHIFT TRAFFIC AS NECESSARY.

LEGEND:

- STAGE 1C CONSTRUCTION
- PREVIOUS CONSTRUCTION
- DIRECTION OF TRAFFIC
- TEMPORARY PAVEMENT

REV	DATE	BY	CHK	APP	DESCRIPTION

DESIGNED BY C. BENSON
DRAWN BY R. MEZA
CHECKED BY L. HEUSTON
IN CHARGE F. NOBARI
DATE 2/17/12

PROPOSED PRELIMINARY DESIGN

NOT FOR CONSTRUCTION

AECOM Technical Services, Inc.
2020 L Street, Suite 300
Sacramento, CA 95811
CH2MHILL

CALIFORNIA HIGH-SPEED RAIL AUTHORITY

CALIFORNIA HIGH-SPEED TRAIN PROJECT
SIERRA SUBDIVISION
PACKAGE 1A
CONSTRUCTION STAGING
STAGE 1C
SR 99 RE-ALIGNMENT

CONTRACT NO.
DRAWING NO. CV-I1019-R99
SCALE AS SHOWN
SHEET NO.

2/14/2012 11:26:03 AM CAHSRP-R1.TBL CHSR_half_black-pdf995.pc3 C:\Documents and Settings\sleong\My Documents\NDMProj\356751 - California High Speed Rail - SR99 Improvements\1S-CV-I1020-STG1C-R99
sleong

NOTES:

1. ROW SHOWN REPRESENTS THE MINIMUM ANTICIPATED ROW REQUIREMENTS. ACCURATE ROW AND ACCESS DATA WILL BE MADE AVAILABLE PRIOR TO NOTICE TO PROCEED.

LEGEND:

- STAGE 1C CONSTRUCTION
- PREVIOUS CONSTRUCTION
- DIRECTION OF TRAFFIC
- TEMPORARY PAVEMENT

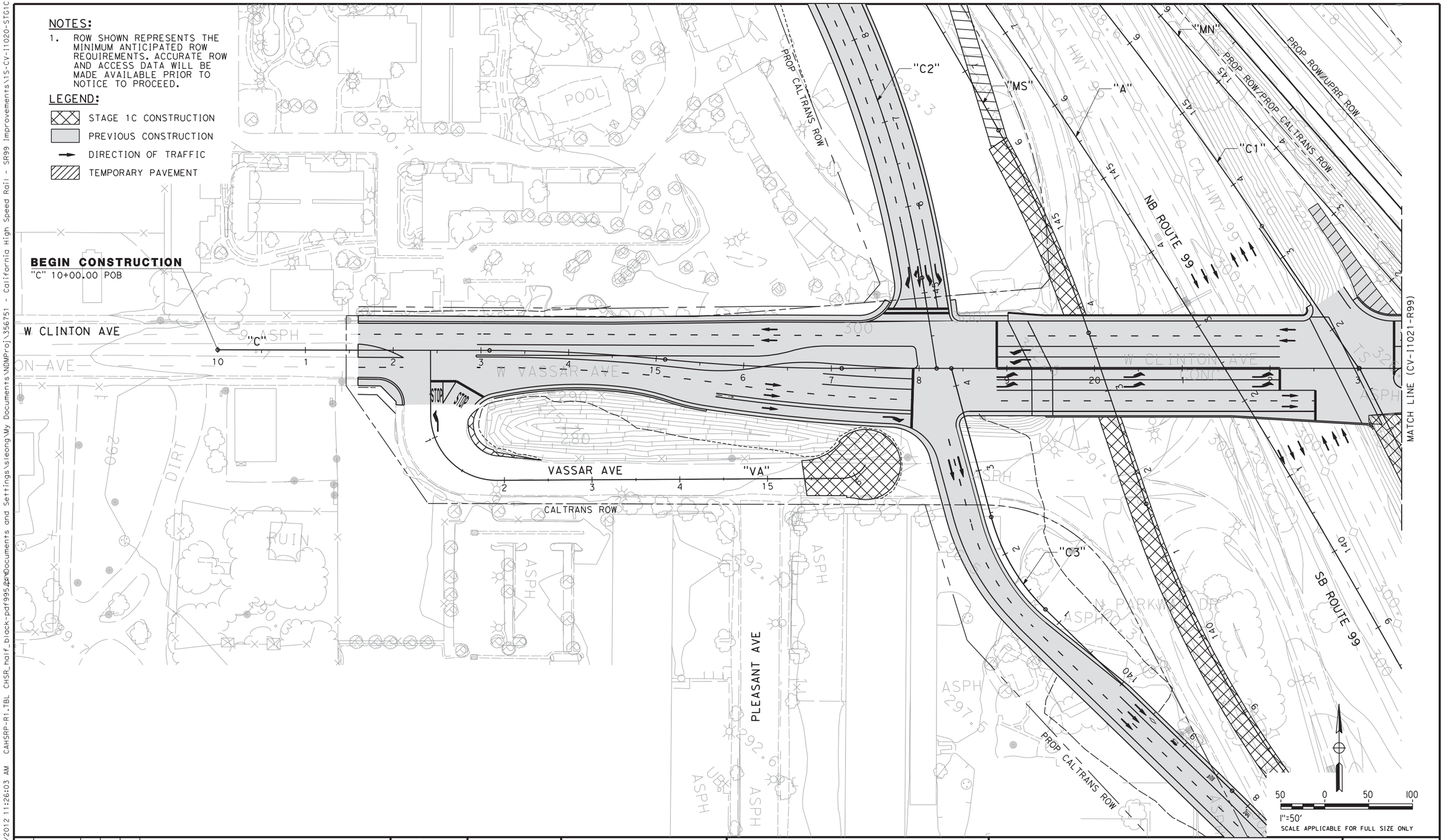

REV	DATE	BY	CHK	APP	DESCRIPTION

DESIGNED BY C. BENSON
DRAWN BY R. MEZA
CHECKED BY L. HEUSTON
IN CHARGE F. NOBARI
DATE 2/17/12

PROPOSED PRELIMINARY DESIGN

NOT FOR CONSTRUCTION

AECOM Technical Services, Inc.
2020 L Street, Suite 300
Sacramento, CA 95811

CH2MHILL

CALIFORNIA HIGH-SPEED RAIL AUTHORITY

CALIFORNIA HIGH-SPEED TRAIN PROJECT
SIERRA SUBDIVISION

PACKAGE 1A
CONSTRUCTION STAGING
STAGE 1C
SR 99 RE-ALIGNMENT

CONTRACT NO.
DRAWING NO. CV-I1020-R99
SCALE AS SHOWN
SHEET NO.

sleong 2/13/2012 1:13:38 PM CAHSRP-R1.TBL CHSR_half_black-pdf995.pt C:\Documents and Settings\sleong\My Documents\NDMProj\356751 - California High Speed Rail - SR99 Improvements\1S-CV-I1021-STG1C-R99

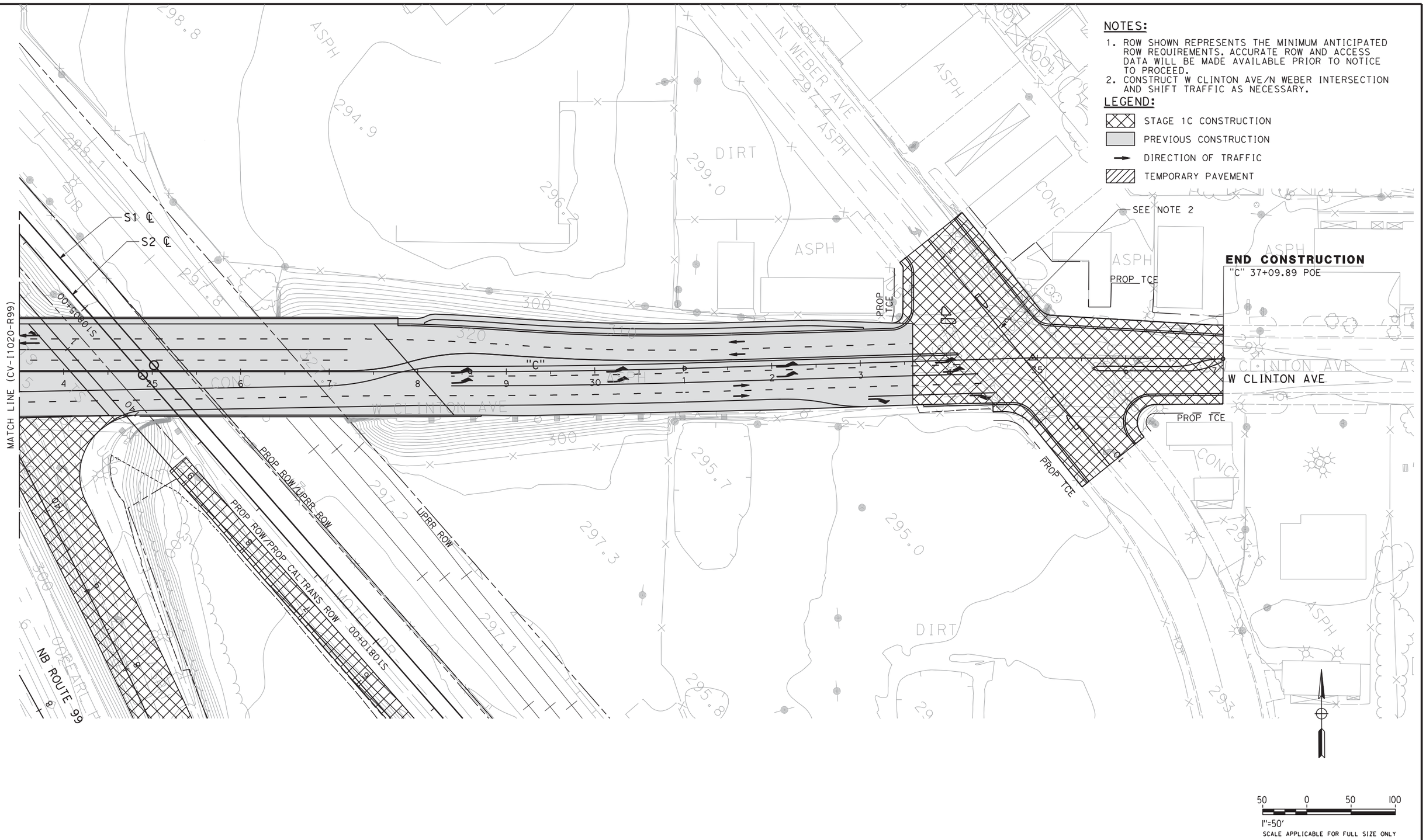

REV	DATE	BY	CHK	APP	DESCRIPTION

DESIGNED BY C. BENSON
DRAWN BY R. MEZA
CHECKED BY L. HEUSTON
IN CHARGE F. NOBARI
DATE 2/17/12

PROPOSED PRELIMINARY DESIGN

NOT FOR CONSTRUCTION

AECOM Technical Services, Inc.
2020 L Street, Suite 300
Sacramento, CA 95811

CH2MHILL

CALIFORNIA HIGH-SPEED RAIL AUTHORITY

CALIFORNIA HIGH-SPEED TRAIN PROJECT
SIERRA SUBDIVISION
PACKAGE 1A
CONSTRUCTION STAGING
STAGE 1C
SR 99 RE-ALIGNMENT

CONTRACT NO.
DRAWING NO. CV-I1021-R99
SCALE AS SHOWN
SHEET NO.

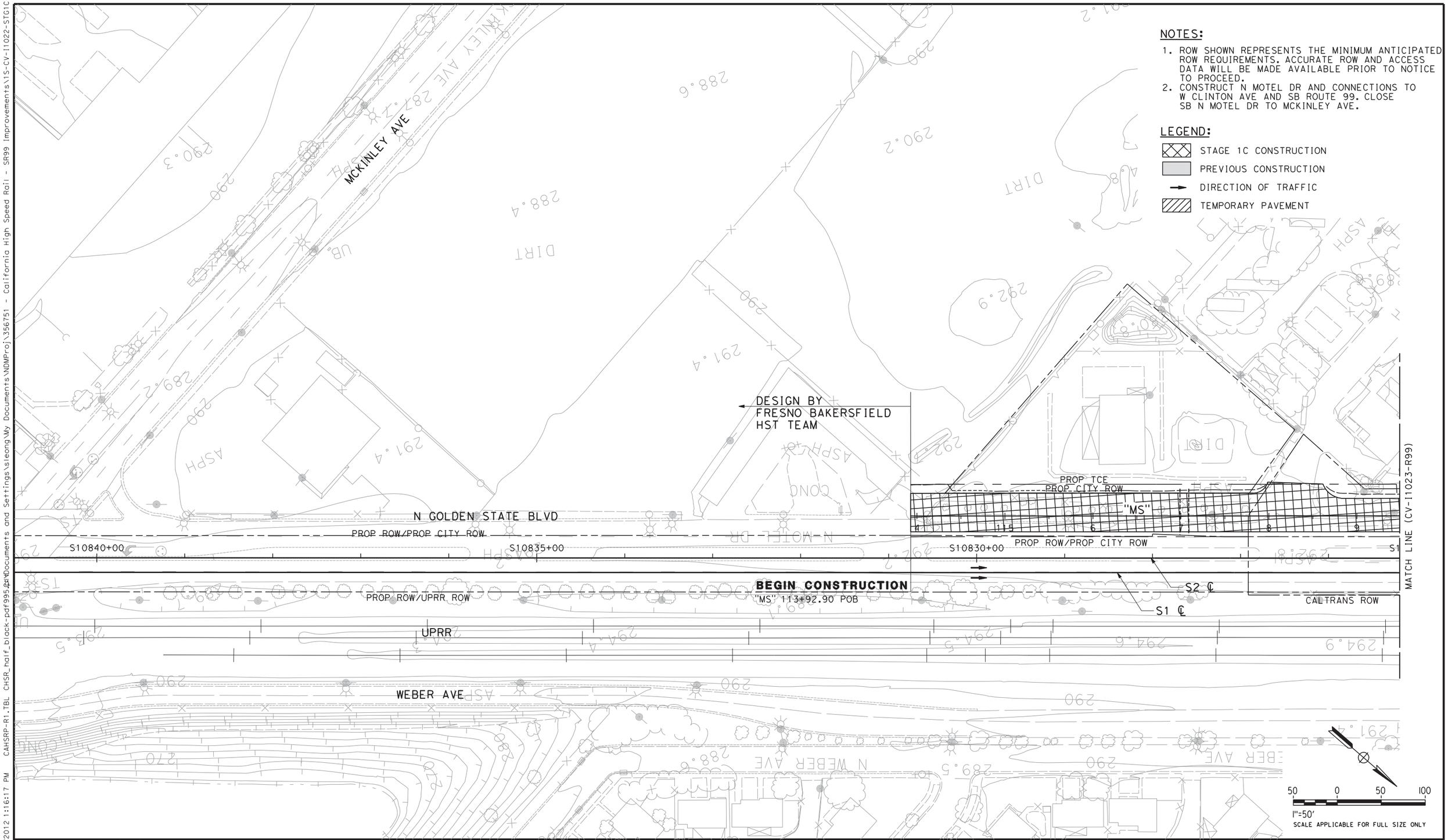

NOTES:

1. ROW SHOWN REPRESENTS THE MINIMUM ANTICIPATED ROW REQUIREMENTS. ACCURATE ROW AND ACCESS DATA WILL BE MADE AVAILABLE PRIOR TO NOTICE TO PROCEED.
2. CONSTRUCT N MOTEL DR AND CONNECTIONS TO W CLINTON AVE AND SB ROUTE 99. CLOSE SB N MOTEL DR TO MCKINLEY AVE.

LEGEND:

- STAGE 1C CONSTRUCTION
- PREVIOUS CONSTRUCTION
- DIRECTION OF TRAFFIC
- TEMPORARY PAVEMENT

REV	DATE	BY	CHK	APP	DESCRIPTION

DESIGNED BY C. BENSON
DRAWN BY R. MEZA
CHECKED BY L. HEUSTON
IN CHARGE F. NOBARI
DATE 2/17/12

PROPOSED PRELIMINARY DESIGN

NOT FOR CONSTRUCTION

AECOM Technical Services, Inc.
2020 L Street, Suite 300
Sacramento, CA 95811
CH2MHILL

CALIFORNIA HIGH-SPEED RAIL AUTHORITY

CALIFORNIA HIGH-SPEED TRAIN PROJECT
SIERRA SUBDIVISION
PACKAGE 1A
CONSTRUCTION STAGING
STAGE 1C
SR 99 RE-ALIGNMENT

CONTRACT NO.
DRAWING NO. CV-I1022-R99
SCALE AS SHOWN
SHEET NO.

2/13/2012 1:16:17 PM CAHSRP-R1.TBL CHSR_half_black-pdf995.pdf sleong
C:\Documents and Settings\sleong\My Documents\NDMProj\356751 - California High Speed Rail - SR99 Improvements\1S-CV-I1022-STG1C-R99

2/13/2012 1:21:18 PM CAHSRP-R1.TBL CHSR_half_black-pdf995.pc3 C:\Documents and Settings\sleong\My Documents\NDMProj\356751 - California High Speed Rail - SR99 Improvements\1S-CV-I1023-STG1C-R99
sleong

NOTES:

1. ROW SHOWN REPRESENTS THE MINIMUM ANTICIPATED ROW REQUIREMENTS. ACCURATE ROW AND ACCESS DATA WILL BE MADE AVAILABLE PRIOR TO NOTICE TO PROCEED.
2. CONSTRUCT N MOTEL DR AND SB ROUTE 99 CONNECTION TO N MOTEL DR AND N MOTEL DR CONNECTION TO W CLINTON AVE. CLOSE SB N MOTEL DR TO MCKINLEY AVE.

LEGEND:

- STAGE 1C CONSTRUCTION
- PREVIOUS CONSTRUCTION
- DIRECTION OF TRAFFIC
- TEMPORARY PAVEMENT

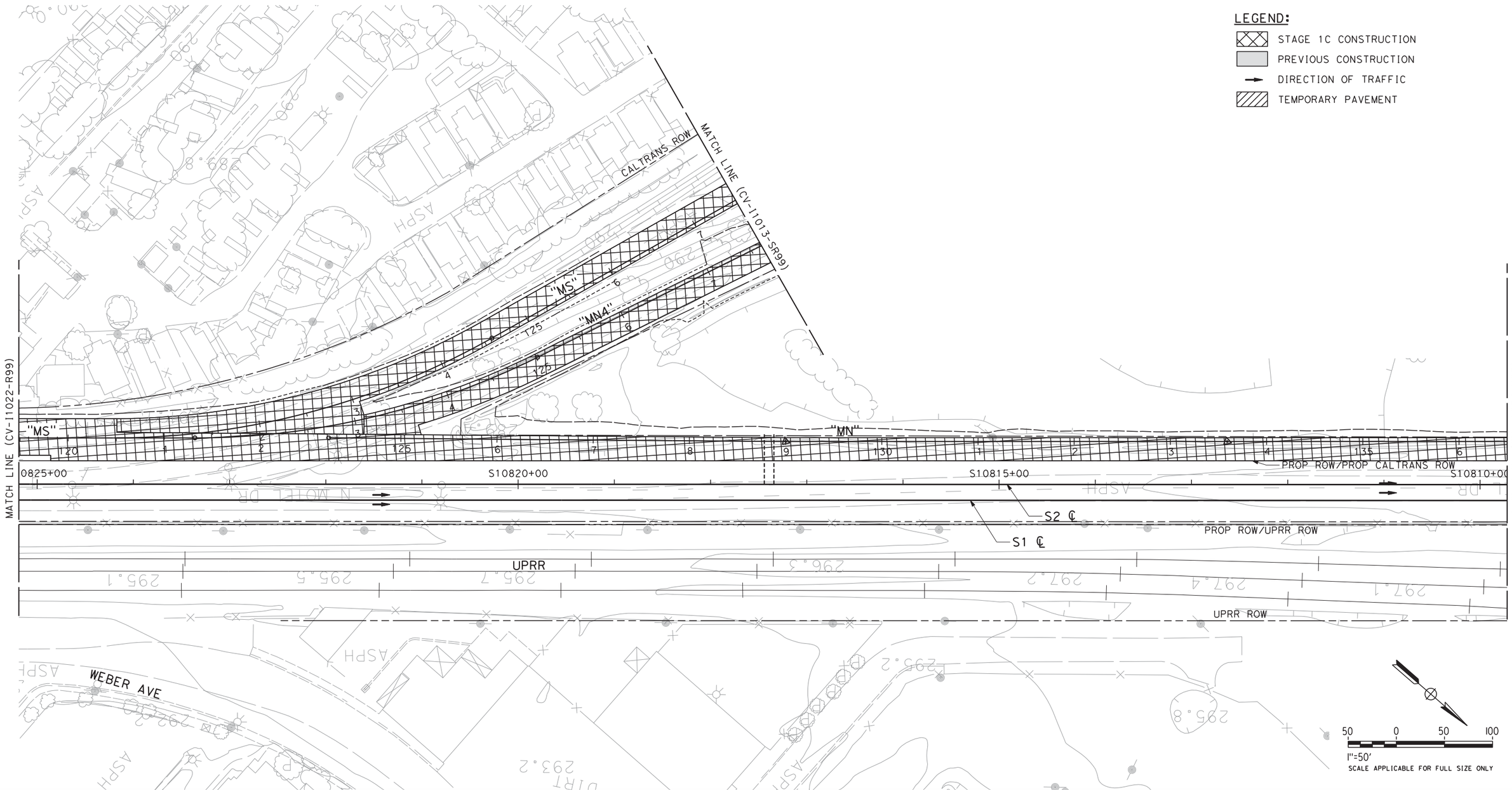

REV	DATE	BY	CHK	APP	DESCRIPTION

DESIGNED BY C. BENSON
DRAWN BY R. MEZA
CHECKED BY L. HEUSTON
IN CHARGE F. NOBARI
DATE 2/17/12

PROPOSED PRELIMINARY DESIGN

NOT FOR CONSTRUCTION

AECOM Technical Services, Inc.
2020 L Street, Suite 300
Sacramento, CA 95811
CH2MHILL

CALIFORNIA HIGH-SPEED RAIL AUTHORITY

CALIFORNIA HIGH-SPEED TRAIN PROJECT
SIERRA SUBDIVISION
PACKAGE 1A
CONSTRUCTION STAGING
STAGE 1C
SR 99 RE-ALIGNMENT

CONTRACT NO.
DRAWING NO. CV-I1023-R99
SCALE AS SHOWN
SHEET NO.

11/16/2011 2:34:19 AM CAHSRP-r1.tbl CHSR_half_black.plt C:\Documents and Settings\ychiu\My Documents\NDMProj\356751 - California High Speed Rail - SR99 Improvements\15-CV-I1024-STG1C-R99.
ychiu

NOTES:

1. ROW SHOWN REPRESENTS THE MINIMUM ANTICIPATED ROW REQUIREMENTS. ACCURATE ROW AND ACCESS DATA WILL BE MADE AVAILABLE PRIOR TO NOTICE TO PROCEED.

LEGEND:

- STAGE 1C CONSTRUCTION
- PREVIOUS CONSTRUCTION
- DIRECTION OF TRAFFIC
- TEMPORARY PAVEMENT

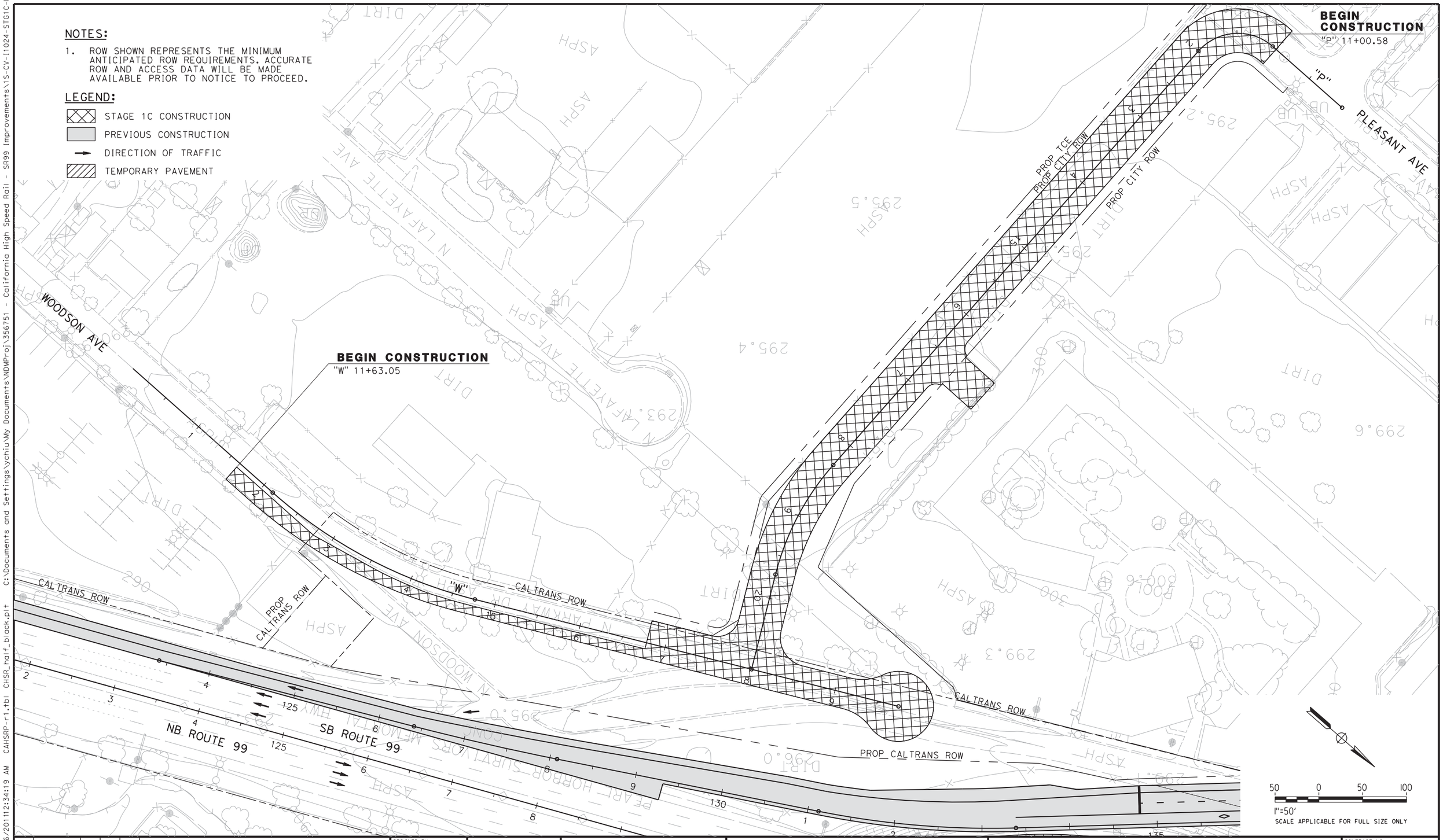

REV	DATE	BY	CHK	APP	DESCRIPTION

DESIGNED BY C. BENSON
DRAWN BY R. MEZA
CHECKED BY L. HEUSTON
IN CHARGE F. NOBARI
DATE 11/22/11

PROPOSED PRELIMINARY DESIGN

NOT FOR CONSTRUCTION

AECOM Technical Services, Inc.
2020 L Street, Suite 300
Sacramento, CA 95811
CH2MHILL

CALIFORNIA HIGH-SPEED RAIL AUTHORITY

CALIFORNIA HIGH-SPEED TRAIN PROJECT
SIERRA SUBDIVISION
PACKAGE 1A
CONSTRUCTION STAGING
STAGE 1C
SR 99 RE-ALIGNMENT

CONTRACT NO.
DRAWING NO. CV-I1024-R99
SCALE AS SHOWN
SHEET NO.

2/13/2012 1:23:20 PM CAHSRP-R1.TBL CHSR_half_black-pdf995.pt C:\Documents and Settings\sleong\My Documents\NDMProj\356751 - California High Speed Rail - SR99 Improvements\1S-CV-I1025-STG1C-R99

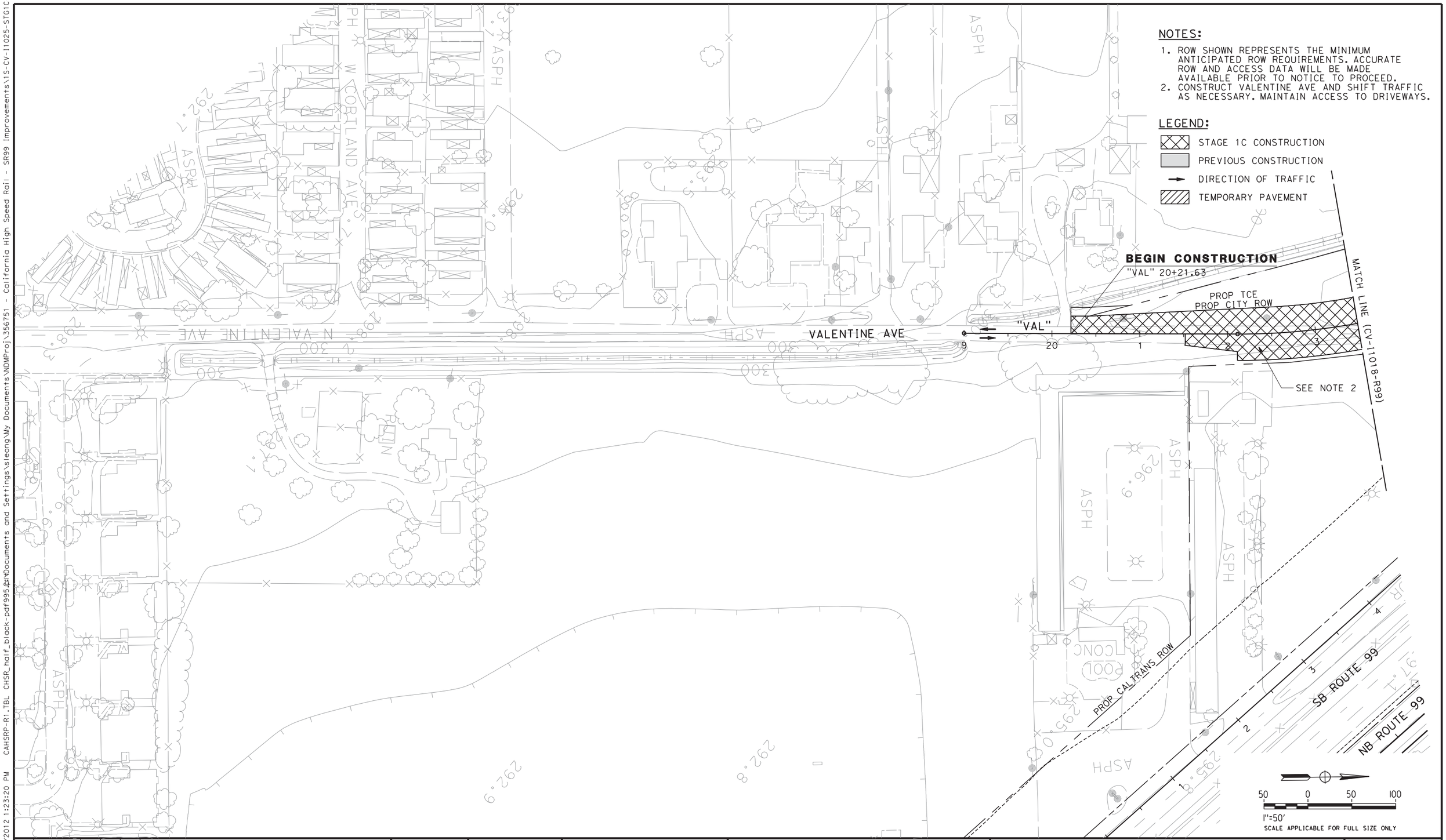

REV	DATE	BY	CHK	APP	DESCRIPTION

DESIGNED BY C. BENSON
DRAWN BY R. MEZA
CHECKED BY L. HEUSTON
IN CHARGE F. NOBARI
DATE 2/17/12

PROPOSED PRELIMINARY DESIGN

NOT FOR CONSTRUCTION

AECOM Technical Services, Inc.
2020 L Street, Suite 300
Sacramento, CA 95811
CH2MHILL

CALIFORNIA HIGH-SPEED RAIL AUTHORITY

CALIFORNIA HIGH-SPEED TRAIN PROJECT
SIERRA SUBDIVISION
PACKAGE 1A
CONSTRUCTION STAGING
STAGE 1C
SR 99 RE-ALIGNMENT

CONTRACT NO.
DRAWING NO. CV-I1025-R99
SCALE AS SHOWN
SHEET NO.

sleong

NOTES:

1. ROW SHOWN REPRESENTS THE MINIMUM ANTICIPATED ROW REQUIREMENTS. ACCURATE ROW AND ACCESS DATA WILL BE MADE AVAILABLE PRIOR TO NOTICE TO PROCEED.

LEGEND:

- STAGE 2A CONSTRUCTION
- PREVIOUS CONSTRUCTION
- DIRECTION OF TRAFFIC
- TEMPORARY PAVEMENT

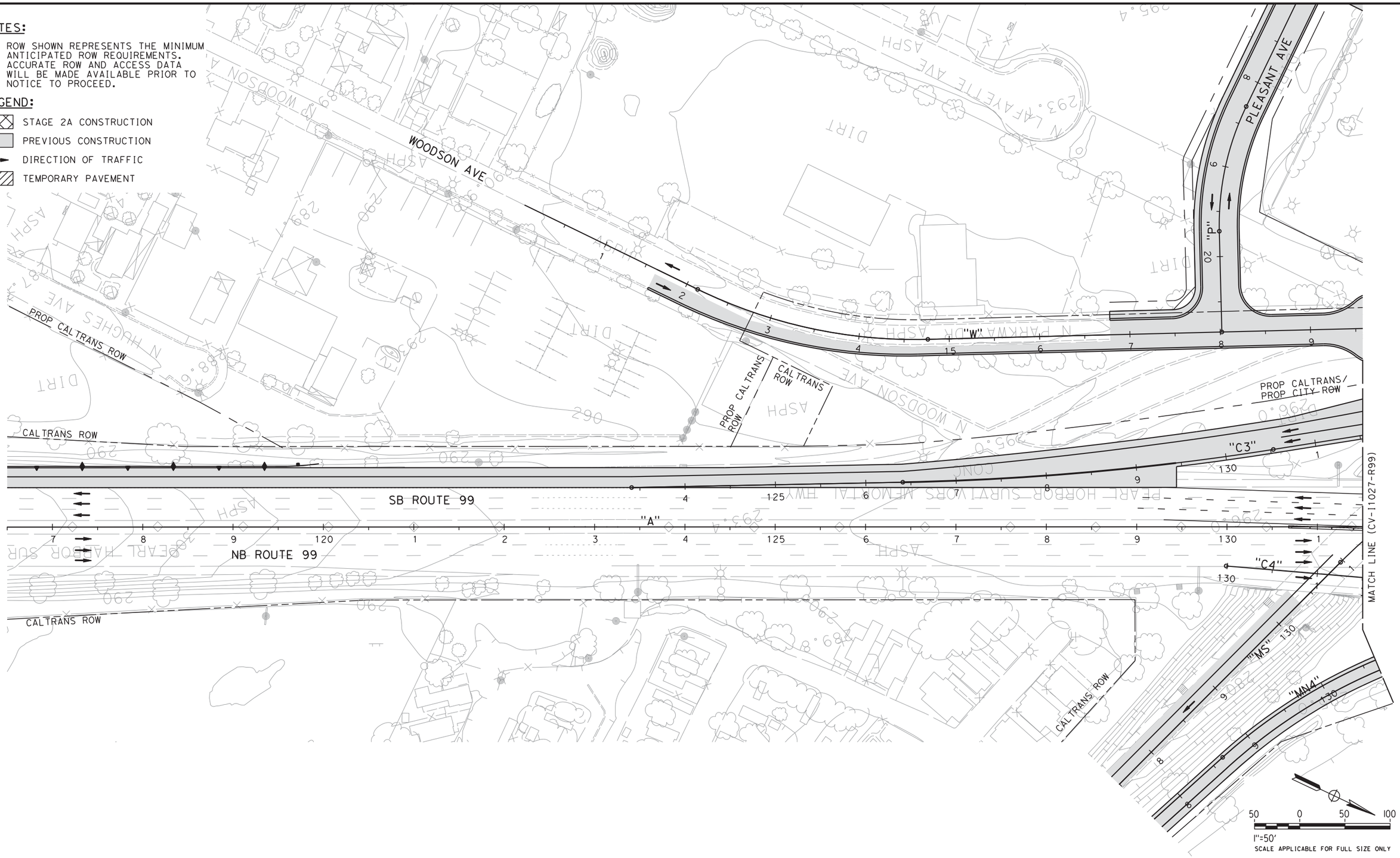

REV	DATE	BY	CHK	APP	DESCRIPTION

DESIGNED BY C. BENSON
DRAWN BY R. MEZA
CHECKED BY L. HEUSTON
IN CHARGE F. NOBARI
DATE 2/17/12

PROPOSED PRELIMINARY DESIGN

NOT FOR CONSTRUCTION

AECOM Technical Services, Inc.
2020 L Street, Suite 300
Sacramento, CA 95811

CH2MHILL

CALIFORNIA HIGH-SPEED RAIL AUTHORITY

CALIFORNIA HIGH-SPEED TRAIN PROJECT
SIERRA SUBDIVISION
PACKAGE 1A
CONSTRUCTION STAGING
STAGE 2A
SR 99 RE-ALIGNMENT

CONTRACT NO.
DRAWING NO. CV-I1026-R99
SCALE AS SHOWN
SHEET NO.

sleong 2/14/2012 11:01:10 AM CAHSRP-R1.TBL CHSR_half_black-pdf995.pt N:\Documents and Settings\sleong\My Documents\NDMProj\356751 - California High Speed Rail - SR99 Improvements\1S-CV-I1026-STG2A-R99

NOTES:

1. ROW SHOWN REPRESENTS THE MINIMUM ANTICIPATED ROW REQUIREMENTS. ACCURATE ROW AND ACCESS DATA WILL BE MADE AVAILABLE PRIOR TO NOTICE TO PROCEED.

LEGEND:

- STAGE 2A CONSTRUCTION
- PREVIOUS CONSTRUCTION
- DIRECTION OF TRAFFIC
- TEMPORARY PAVEMENT

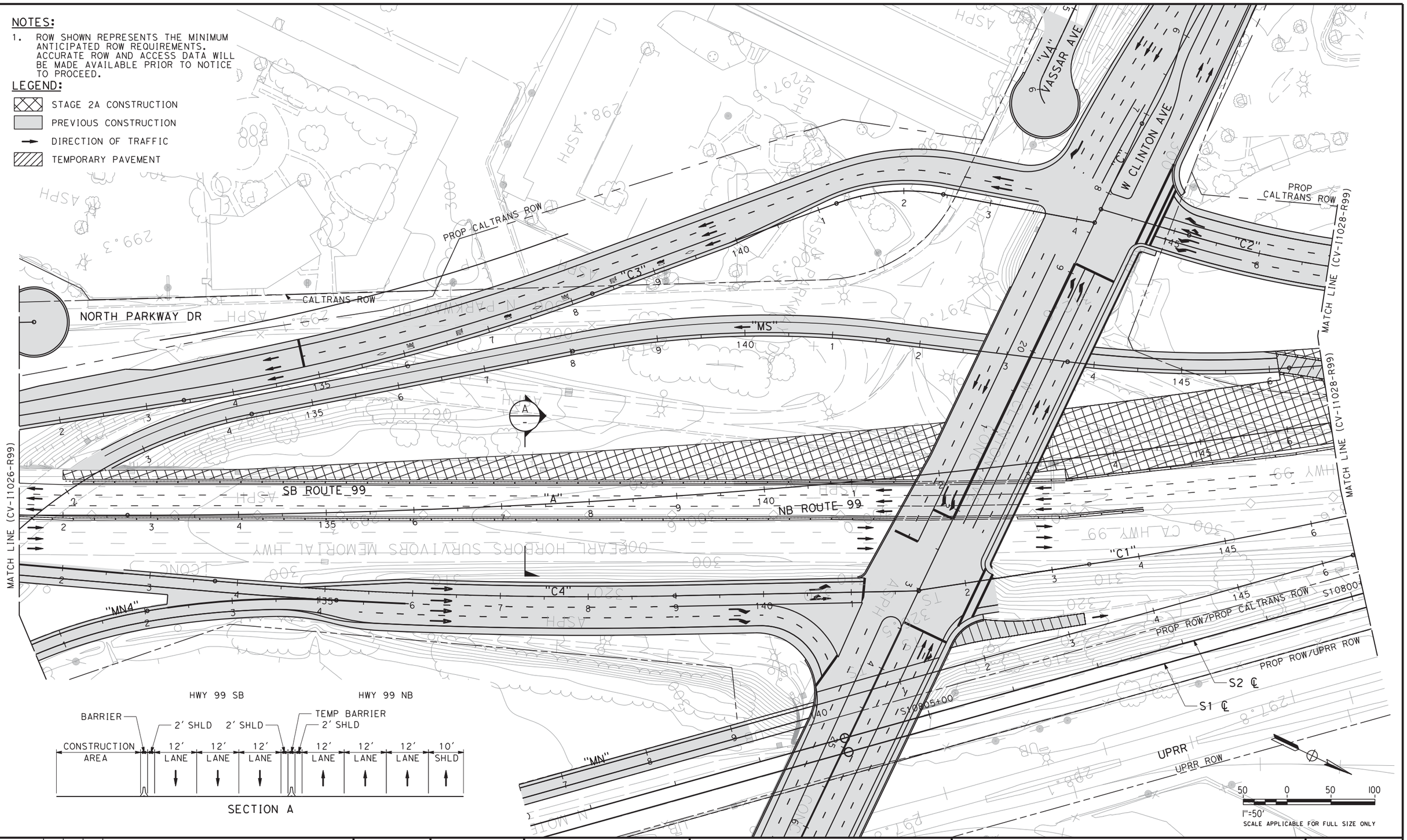

REV	DATE	BY	CHK	APP	DESCRIPTION

DESIGNED BY C. BENSON
DRAWN BY R. MEZA
CHECKED BY L. HEUSTON
IN CHARGE F. NOBARI
DATE 2/17/12

PROPOSED PRELIMINARY DESIGN

NOT FOR CONSTRUCTION

AECOM Technical Services, Inc.
2020 L Street, Suite 300
Sacramento, CA 95811

CH2MHILL

CALIFORNIA HIGH-SPEED RAIL AUTHORITY

CALIFORNIA HIGH-SPEED TRAIN PROJECT
SIERRA SUBDIVISION
PACKAGE 1A
CONSTRUCTION STAGING
STAGE 2A
SR 99 RE-ALIGNMENT

CONTRACT NO.
DRAWING NO. CV-I1027-R99
SCALE AS SHOWN
SHEET NO.

sleong 2/14/2012 11:02:01 AM CAHSRP-R1.TBL CHSR_half_black-pdf995.pt C:\Documents and Settings\sleong\My Documents\NDMProj\356751 - California High Speed Rail - SR99 Improvements\1S-CV-I1027-STG2A-R99

sleong 2/13/2012 1:26:19 PM CAHSRP-R1.TBL CHSR_half_black-pdf995.pt Documents and Settings\sleong\My Documents\NDMProj\356751 - California High Speed Rail - SR99 Improvements\1S-CV-I1028-STG2A-R99

NOTES:

1. ROW SHOWN REPRESENTS THE MINIMUM ANCITIPATED ROW REQUIRMENTS. ACCURATE ROW AND ACCESS DATA WILL BE MADE AVAILABLE PRIOR TO NOTICE TO PROCEED.
2. SHIFT TRAFFIC AS NECESSARY TO CONSTRUCT ROUTE 99 ACROSS TEMPORARY PAVEMENT.

LEGEND:

- STAGE 2A CONSTRUCTION
- PREVIOUS CONSTRUCTION
- DIRECTION OF TRAFFIC
- TEMPORARY PAVEMENT

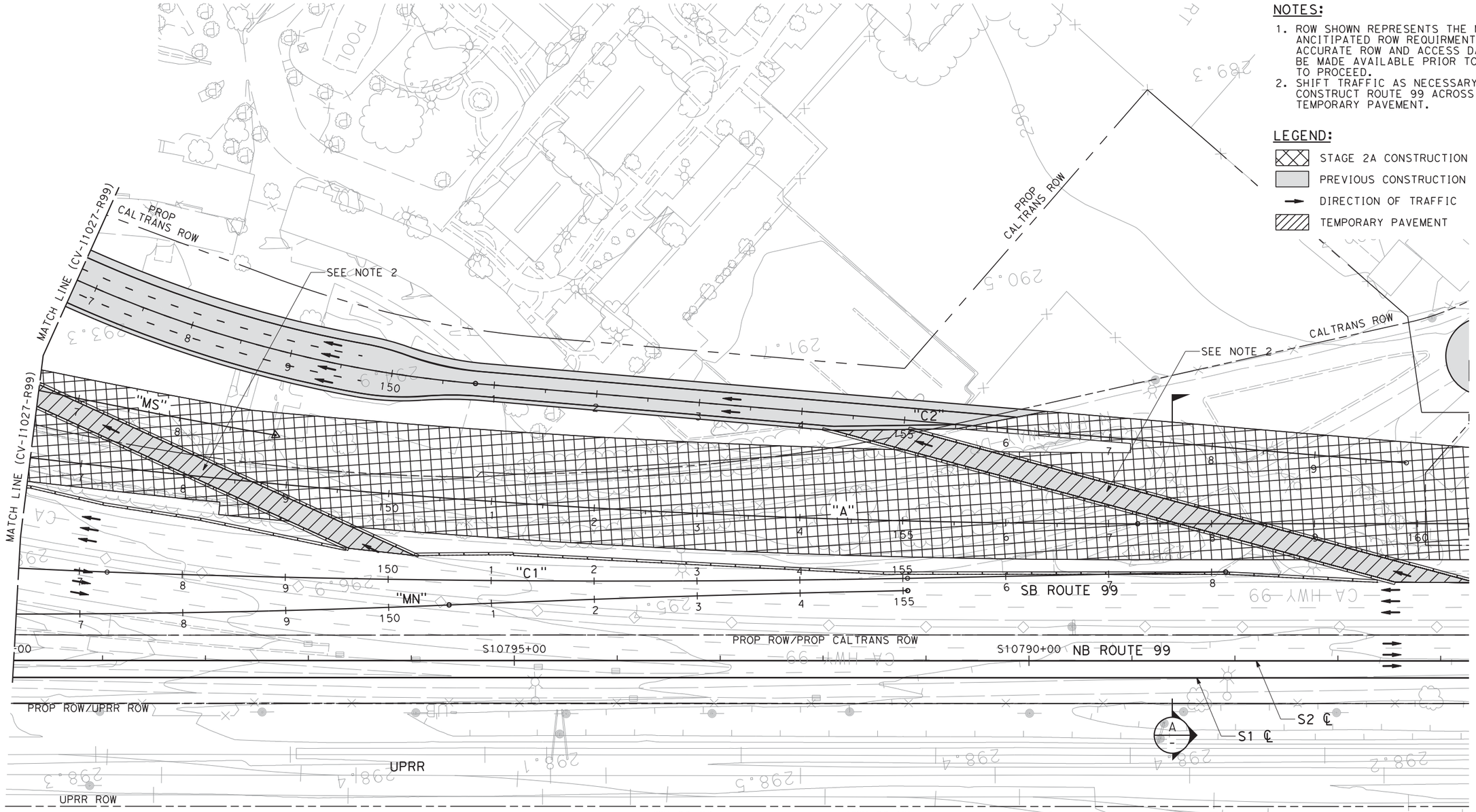

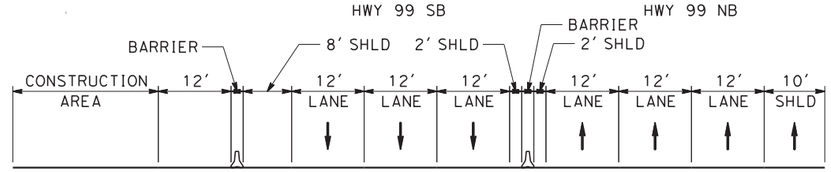

SECTION A

50 0 50 100

1"=50'

SCALE APPLICABLE FOR FULL SIZE ONLY

REV	DATE	BY	CHK	APP	DESCRIPTION

DESIGNED BY C. BENSON
DRAWN BY R. MEZA
CHECKED BY L. HEUSTON
IN CHARGE F. NOBARI
DATE 2/17/12

PROPOSED PRELIMINARY DESIGN

NOT FOR CONSTRUCTION

AECOM Technical Services, Inc.
2020 L Street, Suite 300
Sacramento, CA 95811

CH2MHILL

CALIFORNIA HIGH-SPEED RAIL AUTHORITY

CALIFORNIA HIGH-SPEED TRAIN PROJECT
SIERRA SUBDIVISION
PACKAGE 1A
CONSTRUCTION STAGING
STAGE 2A
SR 99 RE-ALIGNMENT

CONTRACT NO.
DRAWING NO. CV-I1028-R99
SCALE AS SHOWN
SHEET NO.

ychiu 11/16/2011 12:36:36 AM CAHSRP-r1.tbl CHSR_half_black.plt C:\Documents and Settings\ychiu\My Documents\NDMProj\356751 - California High Speed Rail - SR99 Improvements\15-CV-I1029-STG2A-R99.

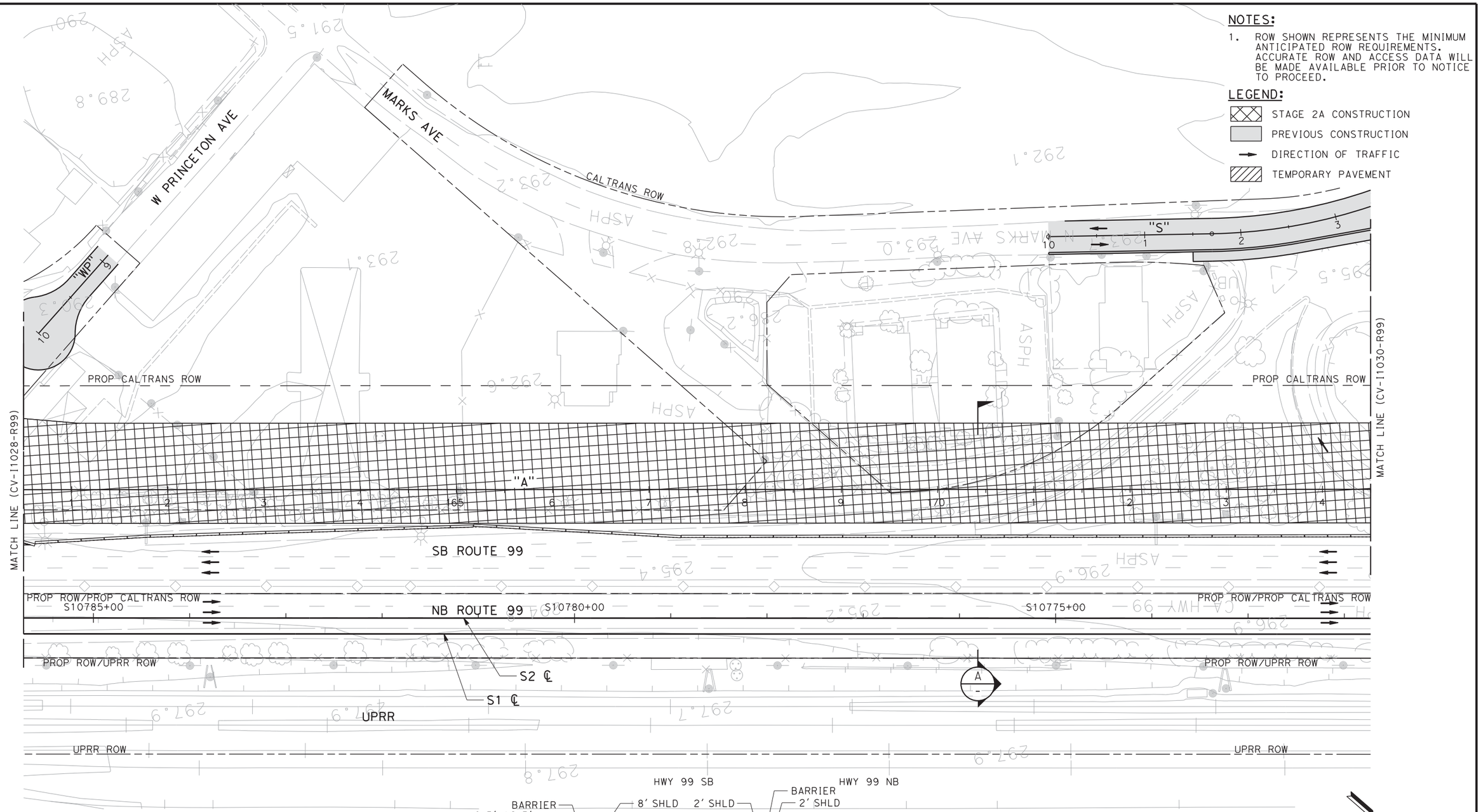

NOTES:

1. ROW SHOWN REPRESENTS THE MINIMUM ANTICIPATED ROW REQUIREMENTS. ACCURATE ROW AND ACCESS DATA WILL BE MADE AVAILABLE PRIOR TO NOTICE TO PROCEED.

LEGEND:

- STAGE 2A CONSTRUCTION
- PREVIOUS CONSTRUCTION
- DIRECTION OF TRAFFIC
- TEMPORARY PAVEMENT

REV	DATE	BY	CHK	APP	DESCRIPTION

DESIGNED BY C. BENSON
DRAWN BY R. MEZA
CHECKED BY L. HEUSTON
IN CHARGE F. NOBARI
DATE 11/22/11

PROPOSED PRELIMINARY DESIGN

NOT FOR CONSTRUCTION

AECOM Technical Services, Inc.
2020 L Street, Suite 300
Sacramento, CA 95811
CH2MHILL

CALIFORNIA HIGH-SPEED RAIL AUTHORITY

CALIFORNIA HIGH-SPEED TRAIN PROJECT
SIERRA SUBDIVISION
PACKAGE 1A
CONSTRUCTION STAGING
STAGE 2A
SR 99 RE-ALIGNMENT

CONTRACT NO.
DRAWING NO. CV-I1029-R99
SCALE AS SHOWN
SHEET NO.

11/16/2011 12:37:03 AM CAHSRP-r1.tbl CHSR_half_black.plt C:\Documents and Settings\ychiu\My Documents\NDMProj\356751 - California High Speed Rail - SR99 Improvements\1S-CV-I1030-STG2A-R99.
ychiu

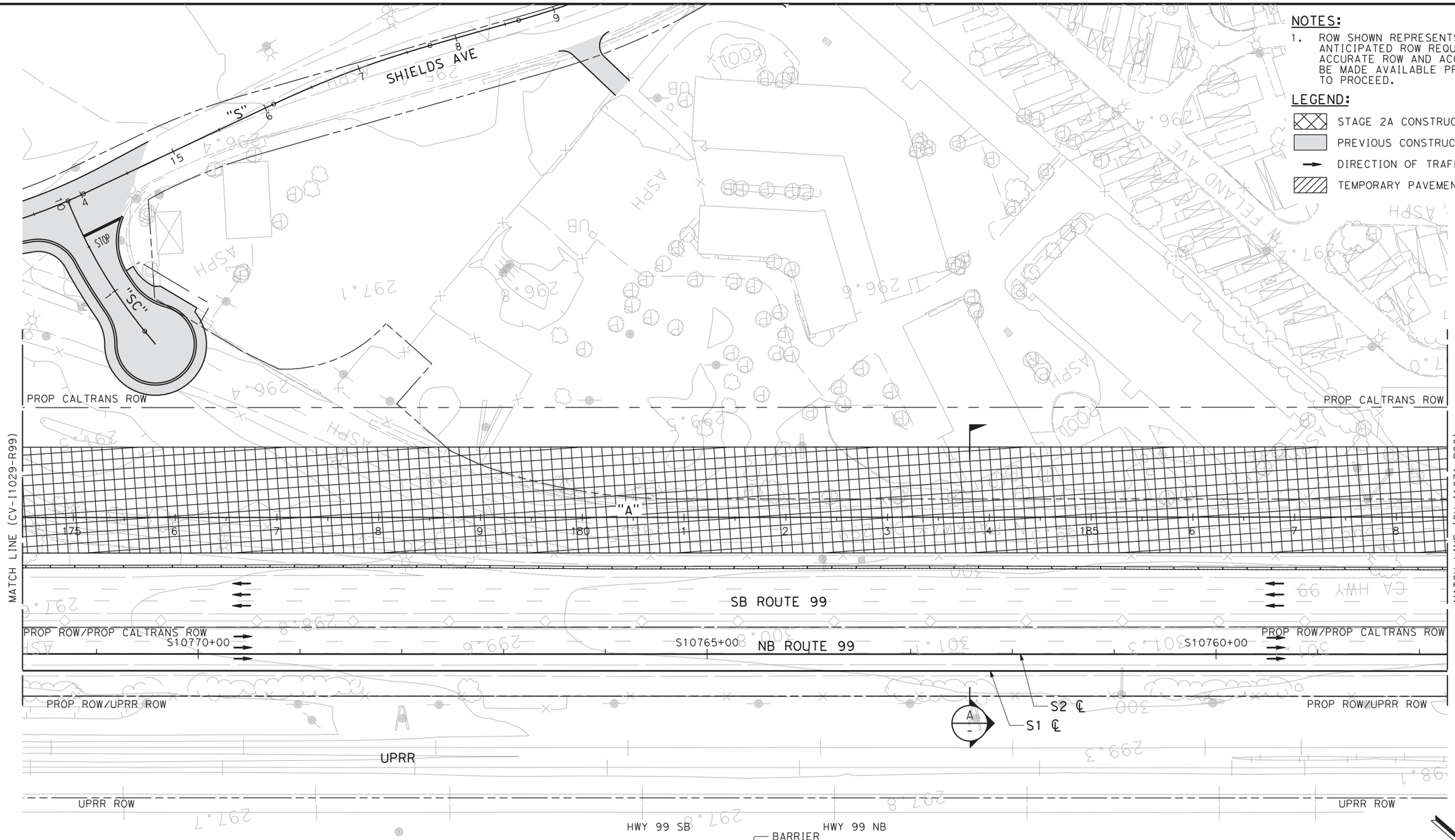

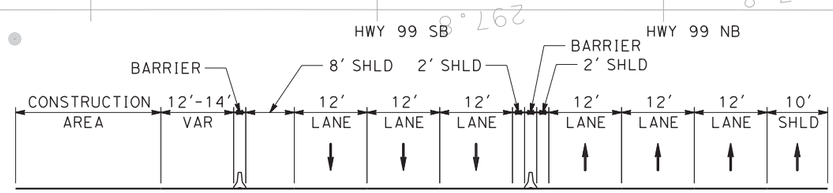

SECTION A

NOTES:

1. ROW SHOWN REPRESENTS THE MINIMUM ANTICIPATED ROW REQUIREMENTS. ACCURATE ROW AND ACCESS DATA WILL BE MADE AVAILABLE PRIOR TO NOTICE TO PROCEED.

LEGEND:

- STAGE 2A CONSTRUCTION
- PREVIOUS CONSTRUCTION
- DIRECTION OF TRAFFIC
- TEMPORARY PAVEMENT

50 0 50 100

1"=50'

SCALE APPLICABLE FOR FULL SIZE ONLY

REV	DATE	BY	CHK	APP	DESCRIPTION

DESIGNED BY C. BENSON
DRAWN BY R. MEZA
CHECKED BY L. HEUSTON
IN CHARGE F. NOBARI
DATE 11/22/11

PROPOSED PRELIMINARY DESIGN

NOT FOR CONSTRUCTION

AECOM Technical Services, Inc.
2020 L Street, Suite 300
Sacramento, CA 95811

CH2MHILL

CALIFORNIA HIGH-SPEED RAIL AUTHORITY

CALIFORNIA HIGH-SPEED TRAIN PROJECT
SIERRA SUBDIVISION
PACKAGE 1A
CONSTRUCTION STAGING
STAGE 2A
SR 99 RE-ALIGNMENT

CONTRACT NO.
DRAWING NO. CV-I1030-R99
SCALE AS SHOWN
SHEET NO.

ychiu 11/16/2011 2:37:29 AM CAHSRP-r1.tbl CHSR_half_black.plt C:\Documents and Settings\ychiu\My Documents\NDMProj\356751 - California High Speed Rail - SR99 Improvements\1S-CV-I1031-STG2A-R99.

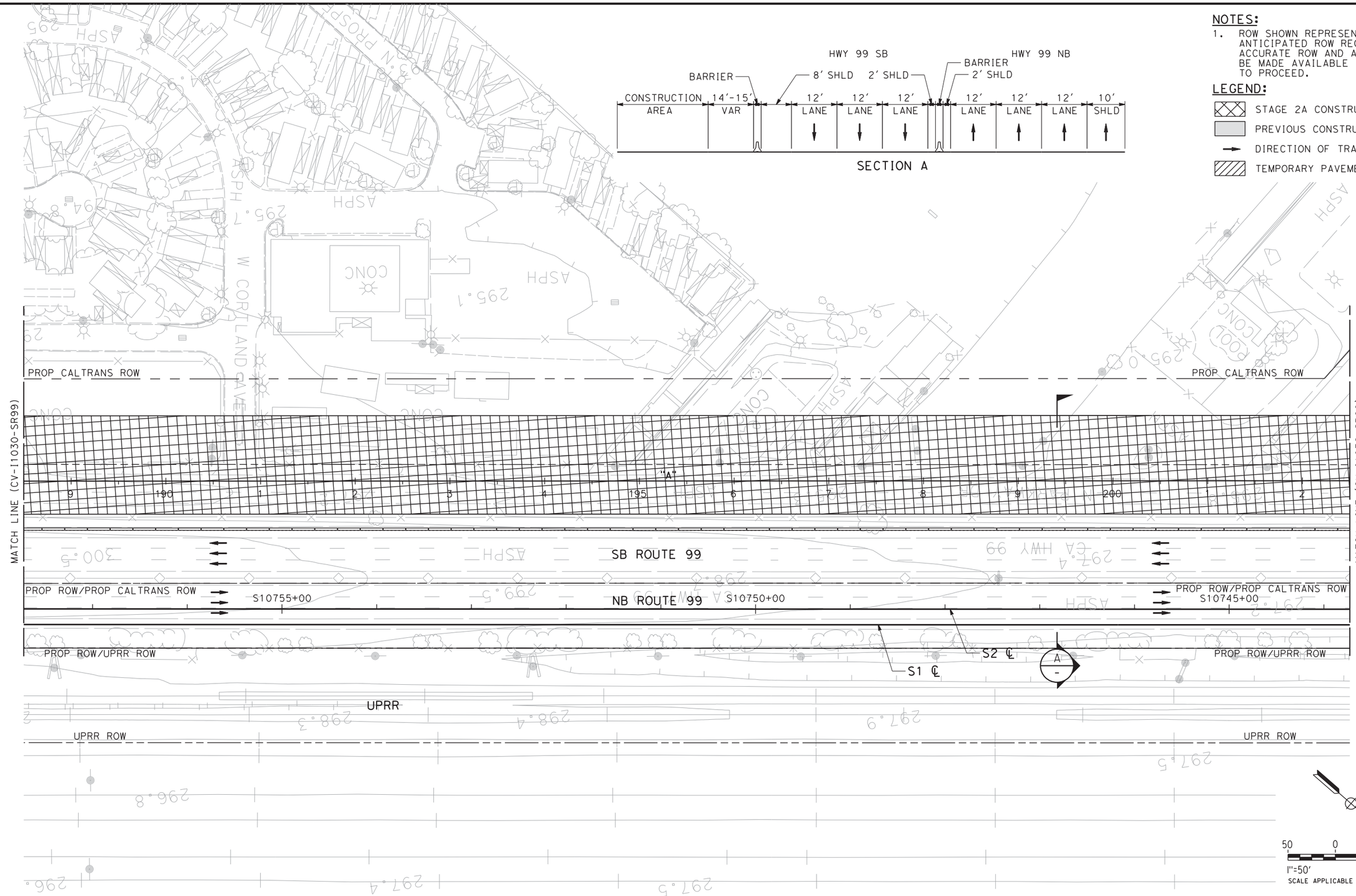

NOTES:

1. ROW SHOWN REPRESENTS THE MINIMUM ANTICIPATED ROW REQUIREMENTS. ACCURATE ROW AND ACCESS DATA WILL BE MADE AVAILABLE PRIOR TO NOTICE TO PROCEED.

LEGEND:

- STAGE 2A CONSTRUCTION
- PREVIOUS CONSTRUCTION
- DIRECTION OF TRAFFIC
- TEMPORARY PAVEMENT

REV	DATE	BY	CHK	APP	DESCRIPTION

DESIGNED BY C. BENSON
DRAWN BY R. MEZA
CHECKED BY L. HEUSTON
IN CHARGE F. NOBARI
DATE 11/22/11

PROPOSED PRELIMINARY DESIGN

NOT FOR CONSTRUCTION

AECOM Technical Services, Inc.
2020 L Street, Suite 300
Sacramento, CA 95811
CH2MHILL

CALIFORNIA HIGH-SPEED RAIL AUTHORITY

CALIFORNIA HIGH-SPEED TRAIN PROJECT
SIERRA SUBDIVISION
PACKAGE 1A
CONSTRUCTION STAGING
STAGE 2A
SR 99 RE-ALIGNMENT

CONTRACT NO.
DRAWING NO. CV-I1031-R99
SCALE AS SHOWN
SHEET NO.

NOTES:

1. ROW SHOWN REPRESENTS THE MINIMUM ANTICIPTED ROW REQUIREMENTS. ACCURATE ROW AND ACCESS DATA WILL BE MADE AVAILABLE PRIOR TO NOTICE TO PROCEED.

LEGEND:

- STAGE 2A CONSTRUCTION
- PREVIOUS CONSTRUCTION
- DIRECTION OF TRAFFIC
- TEMPORARY PAVEMENT

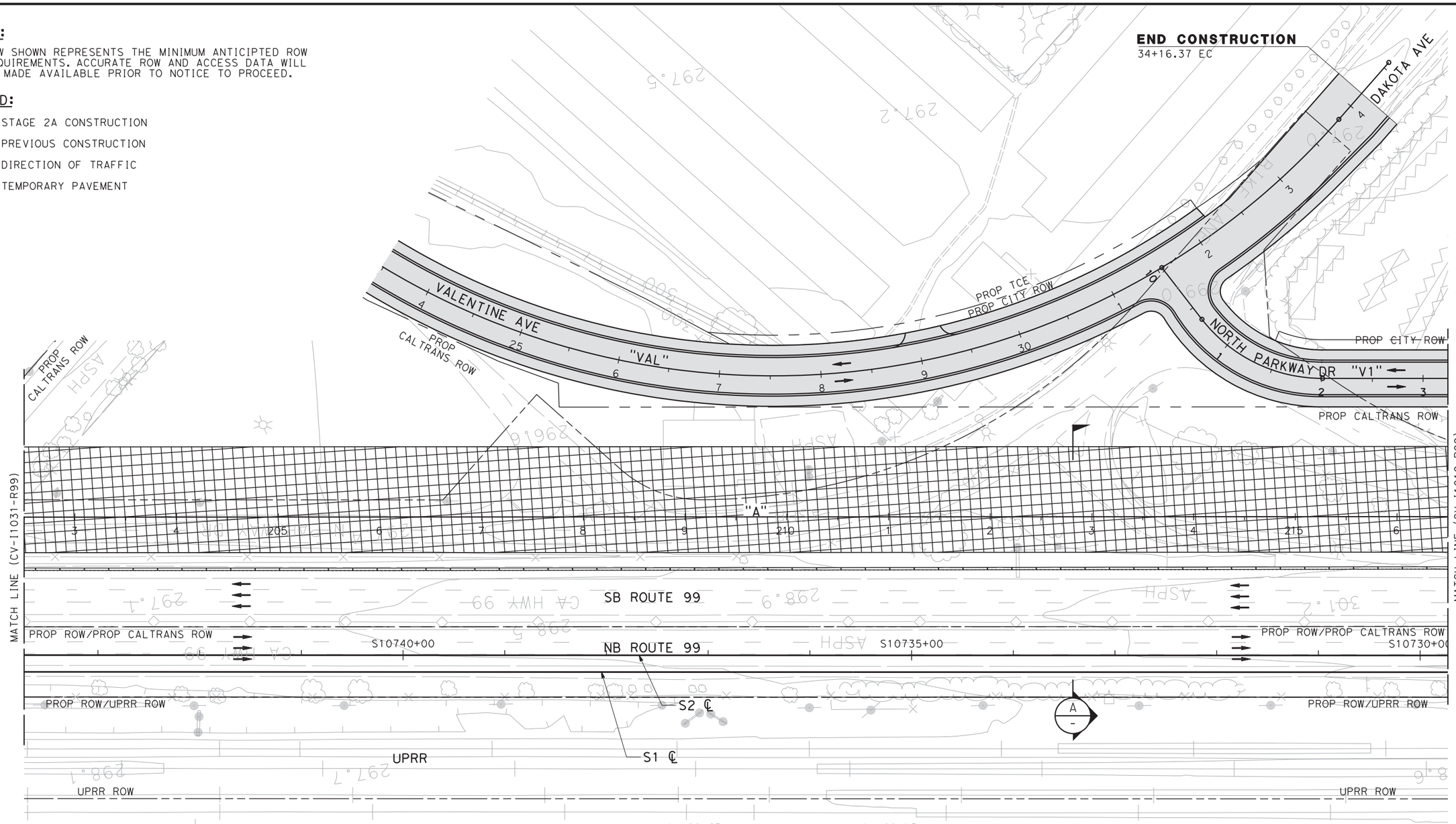

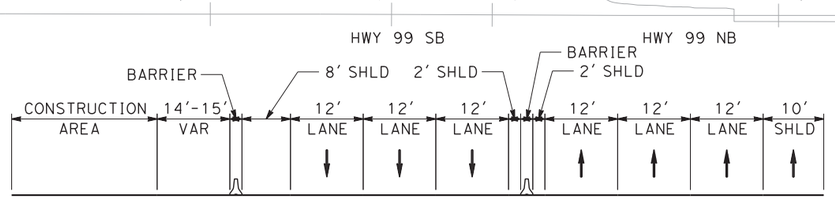

SECTION A

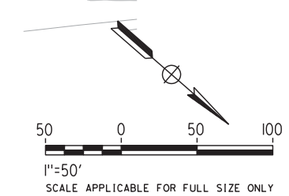

REV	DATE	BY	CHK	APP	DESCRIPTION

DESIGNED BY C. BENSON
DRAWN BY R. MEZA
CHECKED BY L. HEUSTON
IN CHARGE F. NOBARI
DATE 11/22/11

PROPOSED PRELIMINARY DESIGN

NOT FOR CONSTRUCTION

AECOM Technical Services, Inc.
2020 L Street, Suite 300
Sacramento, CA 95811
CH2MHILL

CALIFORNIA HIGH-SPEED RAIL AUTHORITY

CALIFORNIA HIGH-SPEED TRAIN PROJECT
SIERRA SUBDIVISION
PACKAGE 1A
CONSTRUCTION STAGING
STAGE 2A
SR 99 RE-ALIGNMENT

CONTRACT NO.
DRAWING NO. CV-I1032-R99
SCALE AS SHOWN
SHEET NO.

ychiu 11/16/2011 2:37:58 AM CAHSRP-r1.tbl CHSR_half_black.plt C:\Documents and Settings\ychiu\My Documents\NDMProj\356751 - California High Speed Rail - SR99 Improvements\15-CV-I1032-STG2A-R99.

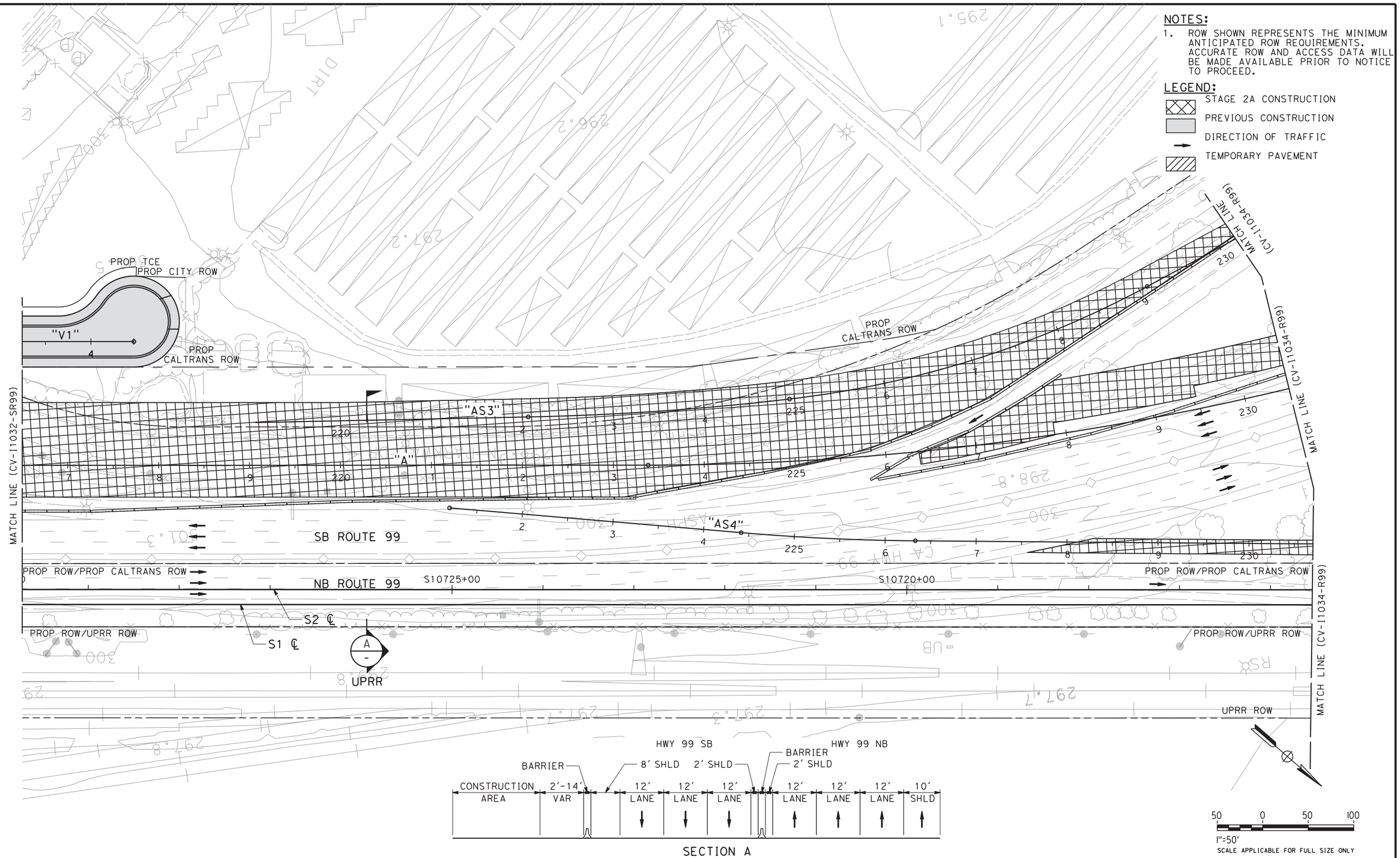

REV	DATE	BY	CHK	APP	DESCRIPTION

DESIGNED BY C. BENSON
DRAWN BY R. MEZA
CHECKED BY L. HEUSTON
IN CHARGE F. NOBARI
DATE 2/17/12

PROPOSED PRELIMINARY DESIGN

NOT FOR CONSTRUCTION

AECOM Technical Services, Inc.
2020 L Street, Suite 300
Sacramento, CA 95811
CH2MHILL

CALIFORNIA HIGH-SPEED RAIL AUTHORITY

CALIFORNIA HIGH-SPEED TRAIN PROJECT
SIERRA SUBDIVISION
PACKAGE 1A
CONSTRUCTION STAGING
STAGE 2A
SR 99 RE-ALIGNMENT

CONTRACT NO.
DRAWING NO. CV-I1033-R99
SCALE AS SHOWN
SHEET NO.

sleong 2/14/2012 11:02:38 AM CAHSRP-R1.TBL CHSR_half_black-pdf995.pxi C:\Documents and Settings\sleong\My Documents\NDMProj\356751 - California High Speed Rail - SR99 Improvements\1S-CV-I1033-STG2A-R99

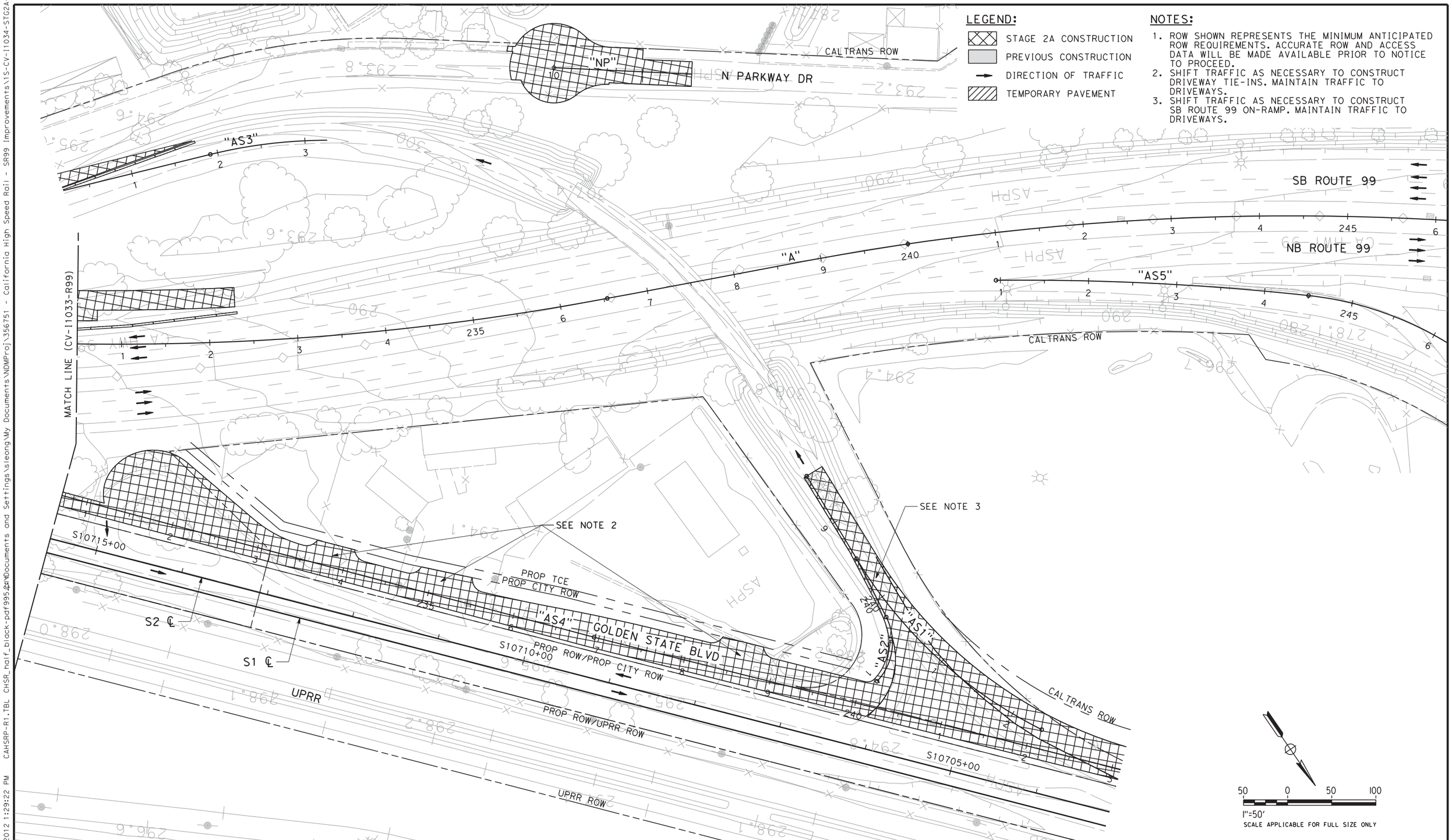

LEGEND:

- STAGE 2A CONSTRUCTION
- PREVIOUS CONSTRUCTION
- DIRECTION OF TRAFFIC
- TEMPORARY PAVEMENT

NOTES:

1. ROW SHOWN REPRESENTS THE MINIMUM ANTICIPATED ROW REQUIREMENTS. ACCURATE ROW AND ACCESS DATA WILL BE MADE AVAILABLE PRIOR TO NOTICE TO PROCEED.
2. SHIFT TRAFFIC AS NECESSARY TO CONSTRUCT DRIVEWAY TIE-INS. MAINTAIN TRAFFIC TO DRIVEWAYS.
3. SHIFT TRAFFIC AS NECESSARY TO CONSTRUCT SB ROUTE 99 ON-RAMP. MAINTAIN TRAFFIC TO DRIVEWAYS.

REV	DATE	BY	CHK	APP	DESCRIPTION

DESIGNED BY C. BENSON
DRAWN BY R. MEZA
CHECKED BY L. HEUSTON
IN CHARGE F. NOBARI
DATE 2/17/12

PROPOSED PRELIMINARY DESIGN

NOT FOR CONSTRUCTION

AECOM Technical Services, Inc.
2020 L Street, Suite 300
Sacramento, CA 95811
CH2MHILL

CALIFORNIA HIGH-SPEED RAIL AUTHORITY

CALIFORNIA HIGH-SPEED TRAIN PROJECT
SIERRA SUBDIVISION
PACKAGE 1A
CONSTRUCTION STAGING
STAGE 2A
SR 99 RE-ALIGNMENT

CONTRACT NO.
DRAWING NO. CV-I1034-R99
SCALE AS SHOWN
SHEET NO.

sleong 2/13/2012 1:29:22 PM CAHSRP-R1.TBL CHSR_half_black-pdf995.pc3 C:\Documents and Settings\sleong\My Documents\NDMProj\356751 - California High Speed Rail - SR99 Improvements\1S-CV-I1034-STG2A-R99

2/14/2012 11:03:23 AM CAHSRP-R1.TBL CHSR_half_black-pdf995.pc*Documents and Settings\sleong\My Documents\MDMProj\356751 - California High Speed Rail - SR99 Improvements\1S-CV-I1035-STG2A-R99
sleong

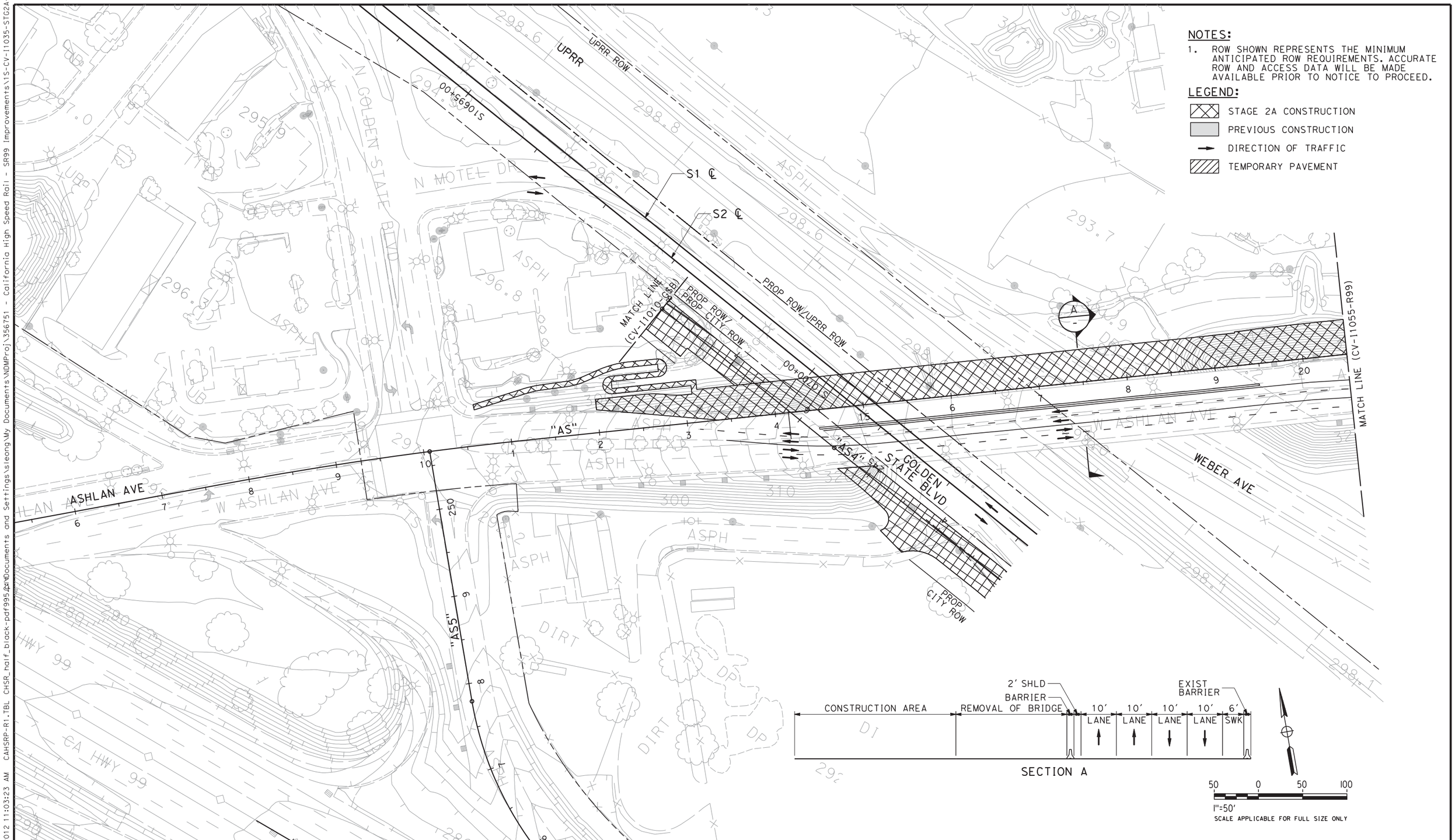

REV	DATE	BY	CHK	APP	DESCRIPTION

DESIGNED BY C. BENSON
DRAWN BY R. MEZA
CHECKED BY L. HEUSTON
IN CHARGE F. NOBARI
DATE 2/17/12

PROPOSED PRELIMINARY DESIGN

NOT FOR CONSTRUCTION

AECOM Technical Services, Inc.
2020 L Street, Suite 300
Sacramento, CA 95811
CH2MHILL

CALIFORNIA HIGH-SPEED RAIL AUTHORITY

CALIFORNIA HIGH-SPEED TRAIN PROJECT
SIERRA SUBDIVISION
PACKAGE 1A
CONSTRUCTION STAGING
STAGE 2A
SR 99 RE-ALIGNMENT

CONTRACT NO.
DRAWING NO. CV-I1035-R99
SCALE AS SHOWN
SHEET NO.

sleong 2/14/2012 11:04:06 AM CAHSRP-R1.TBL CHSR_half_black-pdf995.pc3 C:\Documents and Settings\sleong\My Documents\NDMProj\356751 - California High Speed Rail - SR99 Improvements\1S-CV-I1036-STG2A-R99

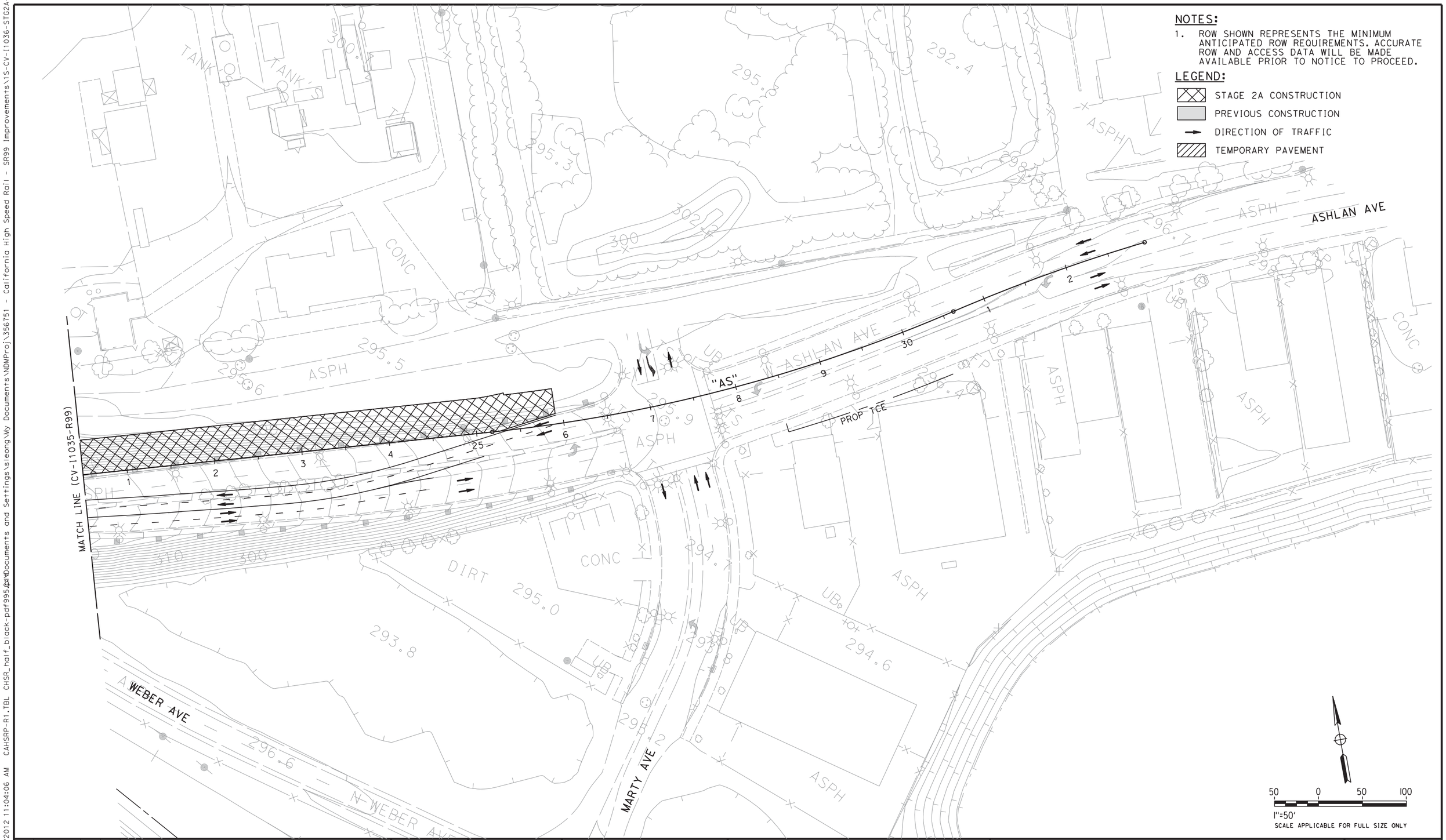

NOTES:

1. ROW SHOWN REPRESENTS THE MINIMUM ANTICIPATED ROW REQUIREMENTS. ACCURATE ROW AND ACCESS DATA WILL BE MADE AVAILABLE PRIOR TO NOTICE TO PROCEED.

LEGEND:

- STAGE 2A CONSTRUCTION
- PREVIOUS CONSTRUCTION
- DIRECTION OF TRAFFIC
- TEMPORARY PAVEMENT

REV	DATE	BY	CHK	APP	DESCRIPTION

DESIGNED BY C. BENSON
DRAWN BY R. MEZA
CHECKED BY L. HEUSTON
IN CHARGE F. NOBARI
DATE 2/17/12

PROPOSED PRELIMINARY DESIGN

NOT FOR CONSTRUCTION

AECOM Technical Services, Inc.
2020 L Street, Suite 300
Sacramento, CA 95811

CH2MHILL

CALIFORNIA HIGH-SPEED RAIL AUTHORITY

CALIFORNIA HIGH-SPEED TRAIN PROJECT
SIERRA SUBDIVISION
PACKAGE 1A
CONSTRUCTION STAGING
STAGE 2A
SR 99 RE-ALIGNMENT

CONTRACT NO.
DRAWING NO. CV-I1036-R99
SCALE AS SHOWN
SHEET NO.

11/16/2011 12:40:56 AM CAHSRP-r1.tbl CHSR_half_black.plt C:\Documents and Settings\ychiu\My Documents\NDMProj\356751 - California High Speed Rail - SR99 Improvements\15-CV-I1037-STG2B-R99.
ychiu

NOTES:

1. ROW SHOWN REPRESENTS THE MINIMUM ANTICIPATED ROW REQUIREMENTS. ACCURATE ROW AND ACCESS DATA WILL BE MADE AVAILABLE PRIOR TO NOTICE TO PROCEED.

LEGEND:

- STAGE 2B CONSTRUCTION
- PREVIOUS CONSTRUCTION
- DIRECTION OF TRAFFIC
- TEMPORARY PAVEMENT

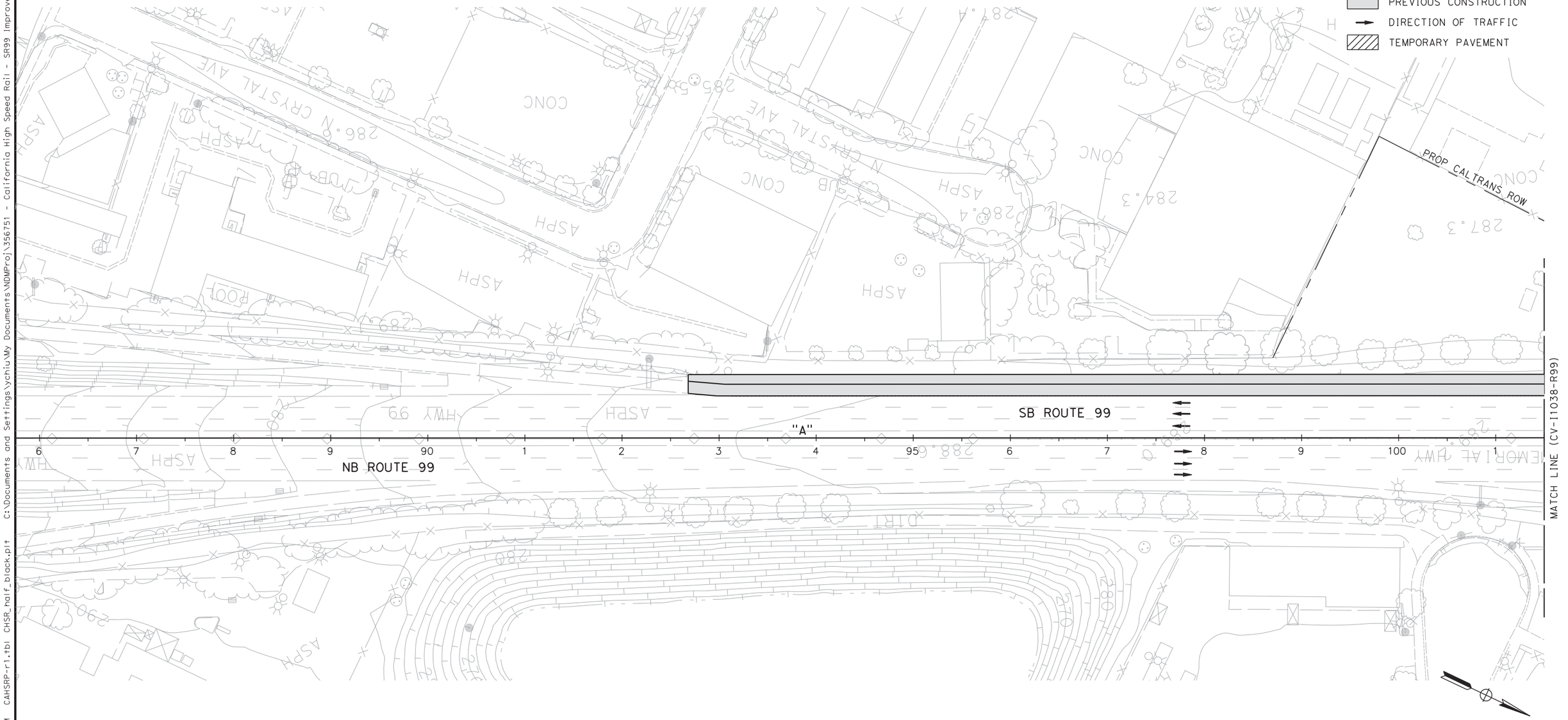

REV	DATE	BY	CHK	APP	DESCRIPTION

DESIGNED BY C. BENSON
DRAWN BY R. MEZA
CHECKED BY L. HEUSTON
IN CHARGE F. NOBARI
DATE 11/22/11

PROPOSED PRELIMINARY DESIGN

NOT FOR CONSTRUCTION

AECOM Technical Services, Inc.
2020 L Street, Suite 300
Sacramento, CA 95811
CH2MHILL

CALIFORNIA HIGH-SPEED RAIL AUTHORITY

CALIFORNIA HIGH-SPEED TRAIN PROJECT
SIERRA SUBDIVISION
PACKAGE 1A
CONSTRUCTION STAGING
STAGE 2B
SR 99 RE-ALIGNMENT

CONTRACT NO.
DRAWING NO. CV-I1037-R99
SCALE AS SHOWN
SHEET NO.

ychiu 11/16/2011 2:41:44 AM CAHSRP-r1.tbl CHSR_half_black.plt C:\Documents and Settings\ychiu\My Documents\NDMProj\356751 - California High Speed Rail - SR99 Improvements\15-CV-I1038-STG2B-R99.

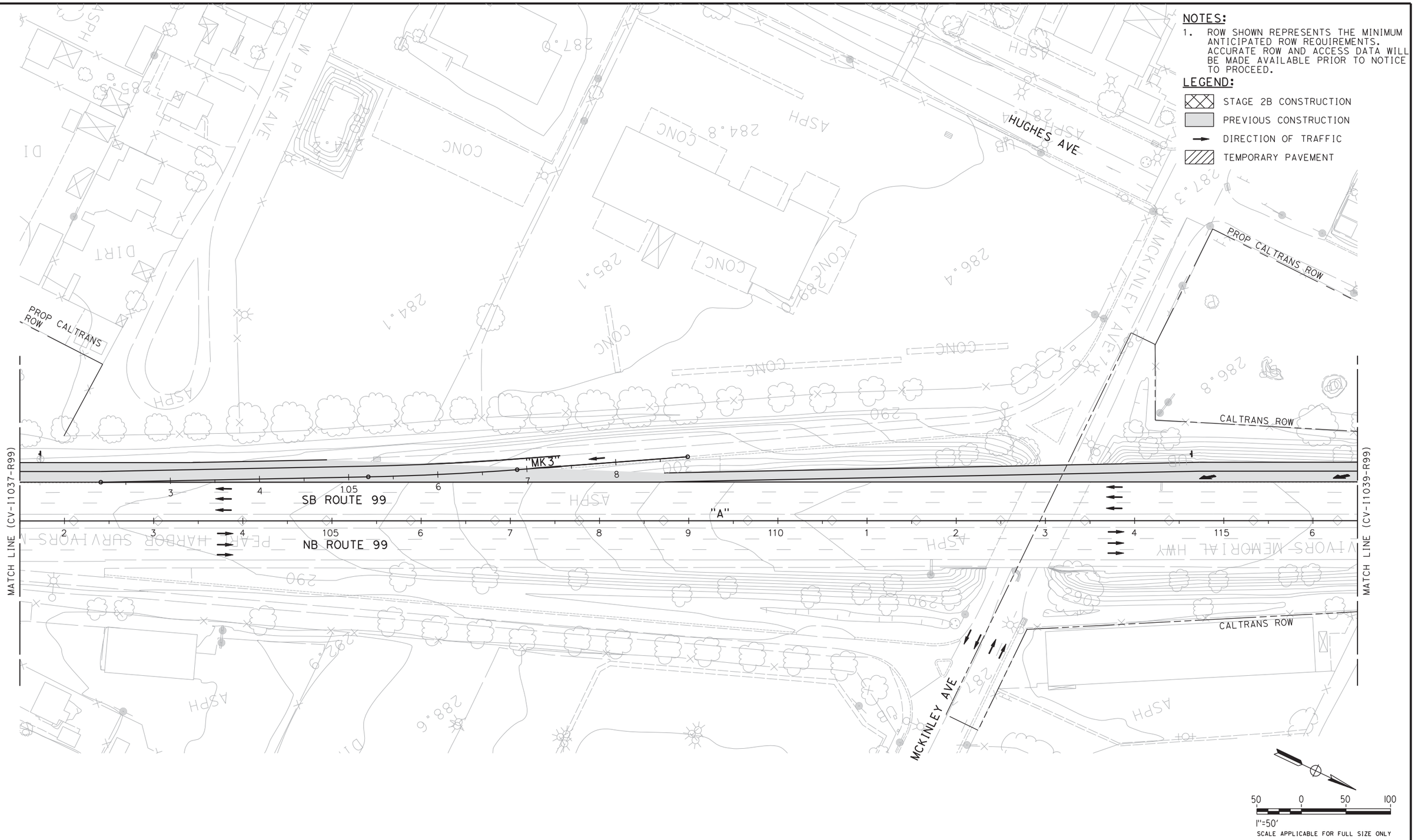

REV	DATE	BY	CHK	APP	DESCRIPTION

DESIGNED BY C. BENSON
DRAWN BY R. MEZA
CHECKED BY L. HEUSTON
IN CHARGE F. NOBARI
DATE 11/22/11

PROPOSED PRELIMINARY DESIGN

NOT FOR CONSTRUCTION

AECOM Technical Services, Inc.
2020 L Street, Suite 300
Sacramento, CA 95811
CH2MHILL

CALIFORNIA HIGH-SPEED RAIL AUTHORITY

CALIFORNIA HIGH-SPEED TRAIN PROJECT
SIERRA SUBDIVISION
PACKAGE 1A
CONSTRUCTION STAGING
STAGE 2B
SR 99 RE-ALIGNMENT

CONTRACT NO.
DRAWING NO. CV-I1038-R99
SCALE AS SHOWN
SHEET NO.

NOTES:

1. ROW SHOWN REPRESENTS THE MINIMUM ANTICIPATED ROW REQUIREMENTS. ACCURATE ROW AND ACCESS DATA WILL BE MADE AVAILABLE PRIOR TO NOTICE TO PROCEED.

LEGEND:

- STAGE 2B CONSTRUCTION
- PREVIOUS CONSTRUCTION
- DIRECTION OF TRAFFIC
- TEMPORARY PAVEMENT

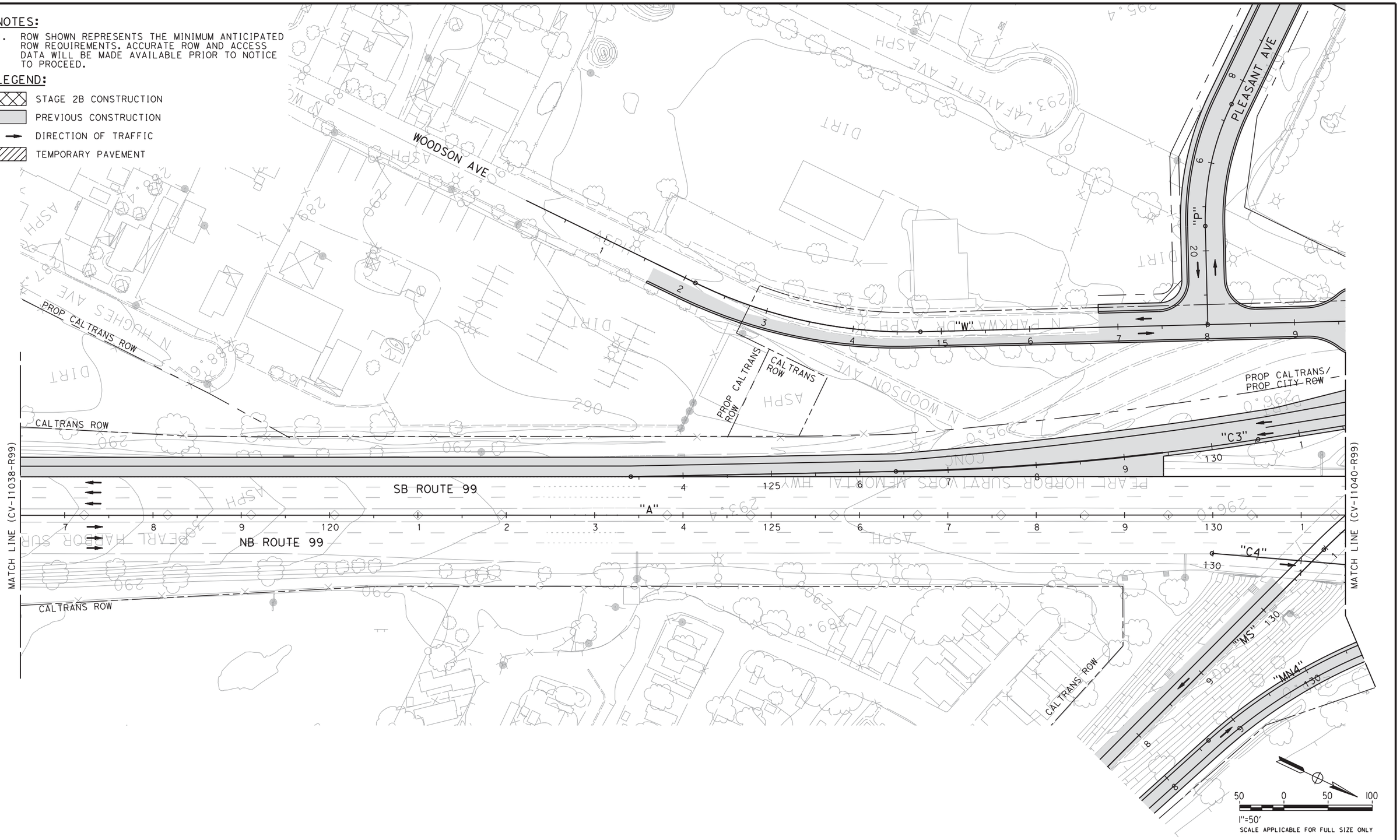

REV	DATE	BY	CHK	APP	DESCRIPTION

DESIGNED BY C. BENSON
DRAWN BY R. MEZA
CHECKED BY L. HEUSTON
IN CHARGE F. NOBARI
DATE 2/17/12

PROPOSED PRELIMINARY DESIGN

NOT FOR CONSTRUCTION

AECOM Technical Services, Inc.
2020 L Street, Suite 300
Sacramento, CA 95811

CH2MHILL

CALIFORNIA HIGH-SPEED RAIL AUTHORITY

CALIFORNIA HIGH-SPEED TRAIN PROJECT
SIERRA SUBDIVISION
PACKAGE 1A
CONSTRUCTION STAGING
STAGE 2B
SR 99 RE-ALIGNMENT

CONTRACT NO.
DRAWING NO. CV-I1039-R99
SCALE AS SHOWN
SHEET NO.

sleong 2/14/2012 11:04:53 AM CAHSRP-R1.TBL CHSR_half_black-pdf995.pt N:\Documents and Settings\sleong\My Documents\NDMProj\356751 - California High Speed Rail - SR99 Improvements\1S-CV-I1039-STG2B-R99

NOTES:

1. ROW SHOWN REPRESENTS THE MINIMUM ANTICIPATED ROW REQUIREMENTS. ACCURATE ROW AND ACCESS DATA WILL BE MADE AVAILABLE PRIOR TO NOTICE TO PROCEED.
2. SHIFT TRAFFIC AS NECESSARY TO CONSTRUCT TIE-IN ALONG ROUTE 99.
3. SHIFT TRAFFIC AS NECESSARY TO CONSTRUCT NB ROUTE 99 ON-RAMP.

LEGEND:

- STAGE 2B CONSTRUCTION
- PREVIOUS CONSTRUCTION
- DIRECTION OF TRAFFIC
- TEMPORARY PAVEMENT

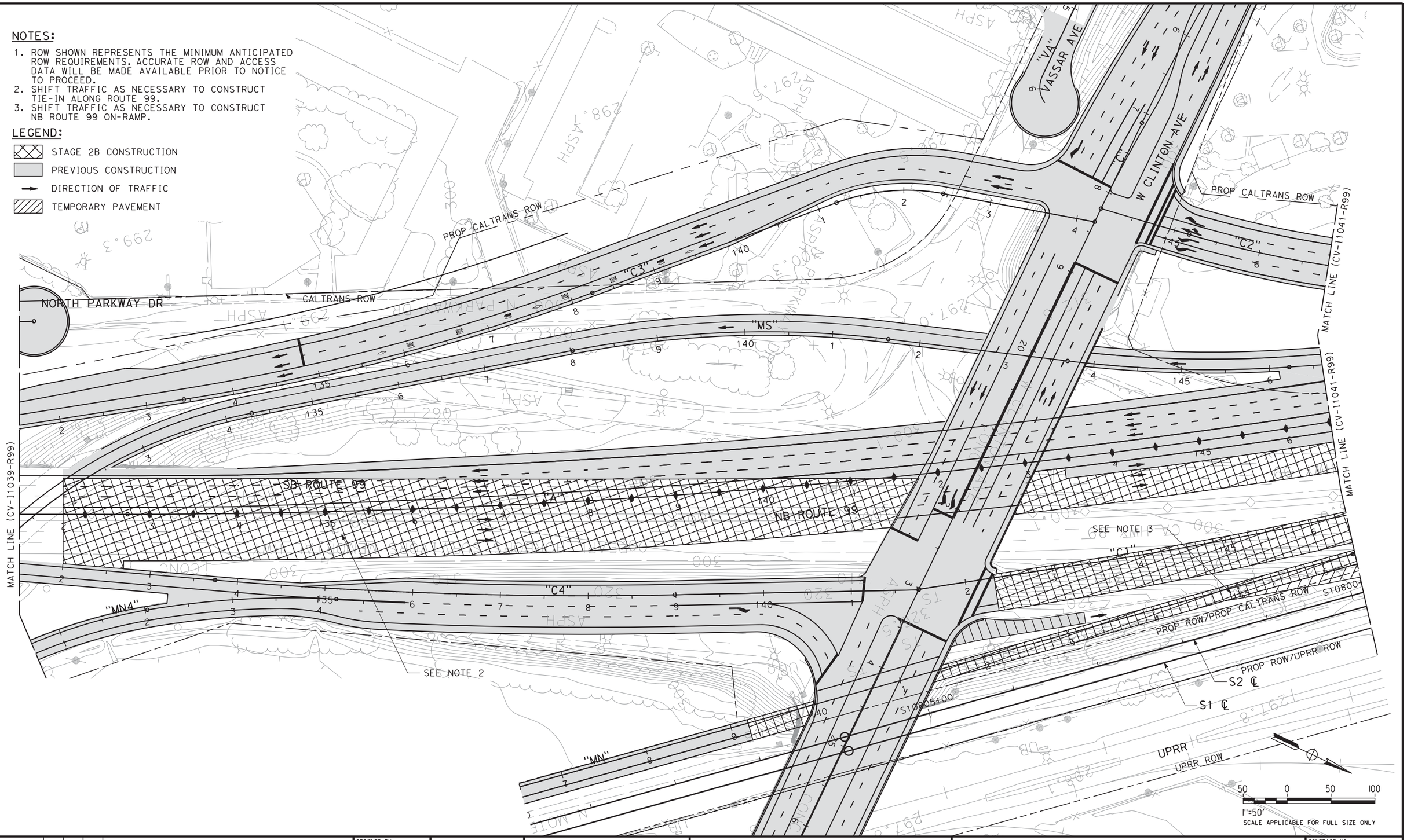

REV	DATE	BY	CHK	APP	DESCRIPTION

DESIGNED BY C. BENSON
DRAWN BY R. MEZA
CHECKED BY L. HEUSTON
IN CHARGE F. NOBARI
DATE 2/17/12

PROPOSED PRELIMINARY DESIGN

NOT FOR CONSTRUCTION

AECOM Technical Services, Inc.
2020 L Street, Suite 300
Sacramento, CA 95811

CH2MHILL

CALIFORNIA HIGH-SPEED RAIL AUTHORITY

CALIFORNIA HIGH-SPEED TRAIN PROJECT
SIERRA SUBDIVISION
PACKAGE 1A
CONSTRUCTION STAGING
STAGE 2B
SR 99 RE-ALIGNMENT

CONTRACT NO.
DRAWING NO. CV-I1040-R99
SCALE AS SHOWN
SHEET NO.

sleong 2/13/2012 1:31:16 PM CAHSRP-R1.TBL CHSR_half_black-pdf995.pc3 C:\Documents and Settings\sleong\My Documents\NDMProj\356751 - California High Speed Rail - SR99 Improvements\1S-CV-I1040-STG2B-R99

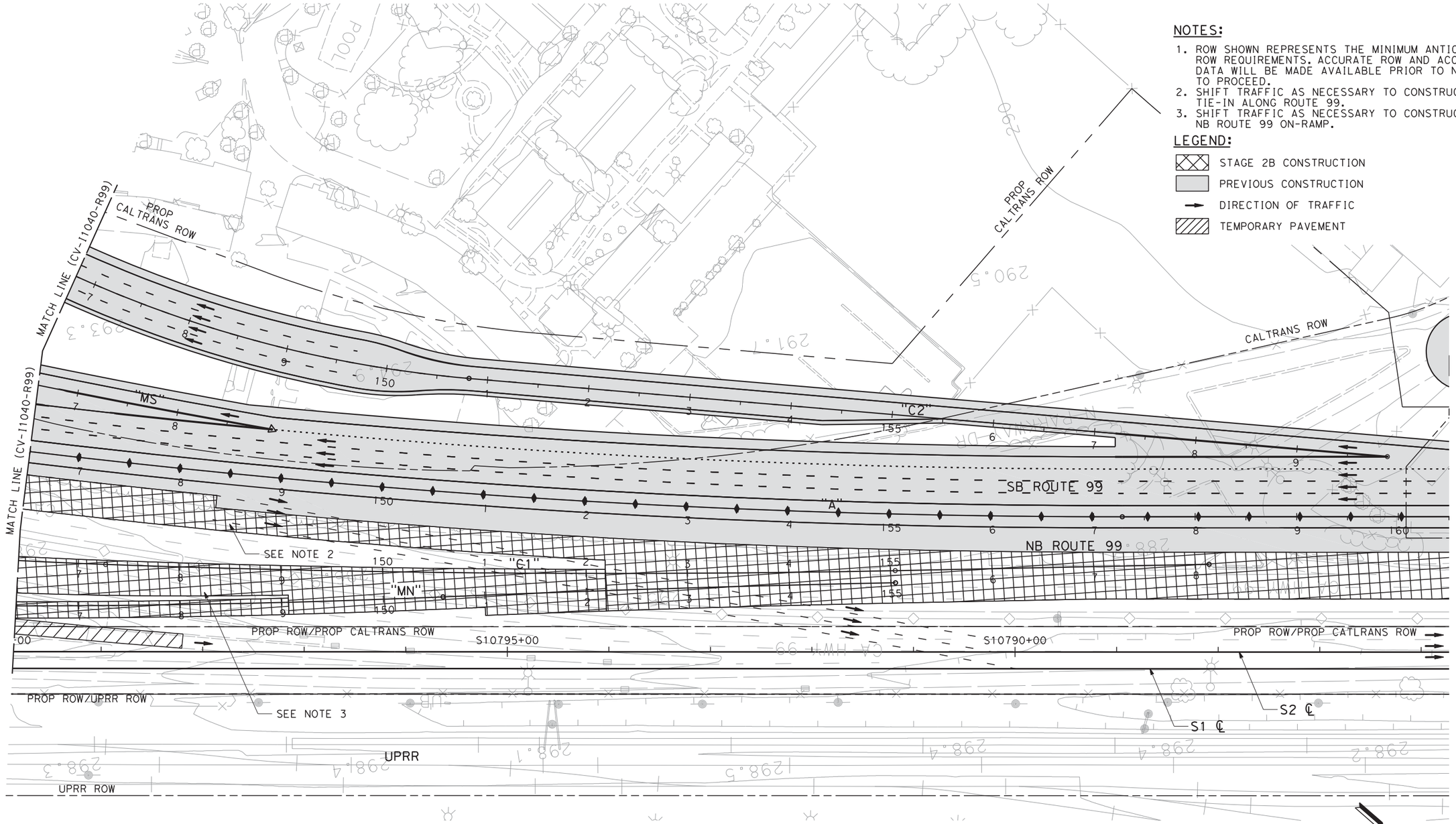

NOTES:

1. ROW SHOWN REPRESENTS THE MINIMUM ANTICIPATED ROW REQUIREMENTS. ACCURATE ROW AND ACCESS DATA WILL BE MADE AVAILABLE PRIOR TO NOTICE TO PROCEED.
2. SHIFT TRAFFIC AS NECESSARY TO CONSTRUCT TIE-IN ALONG ROUTE 99.
3. SHIFT TRAFFIC AS NECESSARY TO CONSTRUCT NB ROUTE 99 ON-RAMP.

LEGEND:

- STAGE 2B CONSTRUCTION
- PREVIOUS CONSTRUCTION
- DIRECTION OF TRAFFIC
- TEMPORARY PAVEMENT

50 0 50 100

1"=50'

SCALE APPLICABLE FOR FULL SIZE ONLY

REV	DATE	BY	CHK	APP	DESCRIPTION

DESIGNED BY C. BENSON
DRAWN BY R. MEZA
CHECKED BY L. HEUSTON
IN CHARGE F. NOBARI
DATE 2/17/12

PROPOSED PRELIMINARY DESIGN

NOT FOR CONSTRUCTION

AECOM Technical Services, Inc.
2020 L Street, Suite 300
Sacramento, CA 95811

CH2MHILL

CALIFORNIA HIGH-SPEED RAIL AUTHORITY

CALIFORNIA HIGH-SPEED TRAIN PROJECT
SIERRA SUBDIVISION
PACKAGE 1A
CONSTRUCTION STAGING
STAGE 2B
SR 99 RE-ALIGNMENT

CONTRACT NO.
DRAWING NO. CV-I1041-R99
SCALE AS SHOWN
SHEET NO.

sleong 2/13/2012 1:33:15 PM CAHSRP-R1.TBL CHSR_half_black-pdf995.pc3 C:\Documents and Settings\sleong\My Documents\NDMProj\356751 - California High Speed Rail - SR99 Improvements\1S-CV-I1041-STG2B-R99

ychiu 11/16/2011 2:46:04 AM CAHSRP-r1.tbl CHSR_half_black.plt C:\Documents and Settings\ychiu\My Documents\NDMProj\356751 - California High Speed Rail - SR99 Improvements\1S-CV-I1042-STG2B-R99.

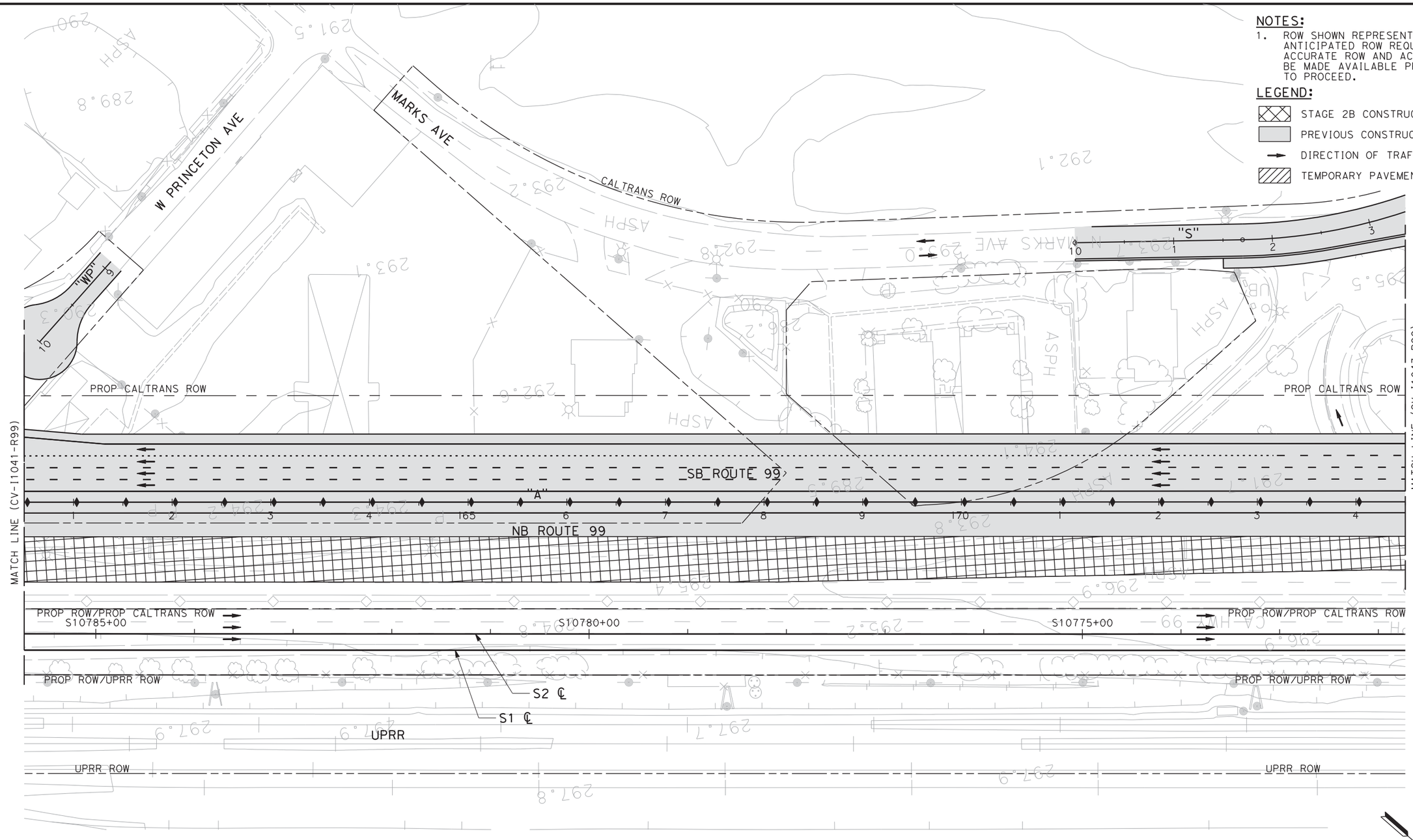

NOTES:

1. ROW SHOWN REPRESENTS THE MINIMUM ANTICIPATED ROW REQUIREMENTS. ACCURATE ROW AND ACCESS DATA WILL BE MADE AVAILABLE PRIOR TO NOTICE TO PROCEED.

LEGEND:

- STAGE 2B CONSTRUCTION
- PREVIOUS CONSTRUCTION
- DIRECTION OF TRAFFIC
- TEMPORARY PAVEMENT

50 0 50 100

1"=50'

SCALE APPLICABLE FOR FULL SIZE ONLY

REV	DATE	BY	CHK	APP	DESCRIPTION

DESIGNED BY C. BENSON
DRAWN BY R. MEZA
CHECKED BY L. HEUSTON
IN CHARGE F. NOBARI
DATE 11/22/11

PROPOSED PRELIMINARY DESIGN

NOT FOR CONSTRUCTION

AECOM Technical Services, Inc.
2020 L Street, Suite 300
Sacramento, CA 95811

CH2MHILL

CALIFORNIA HIGH-SPEED RAIL AUTHORITY

CALIFORNIA HIGH-SPEED TRAIN PROJECT
SIERRA SUBDIVISION
PACKAGE 1A
CONSTRUCTION STAGING
STAGE 2B
SR 99 RE-ALIGNMENT

CONTRACT NO.
DRAWING NO. CV-I1042-R99
SCALE AS SHOWN
SHEET NO.

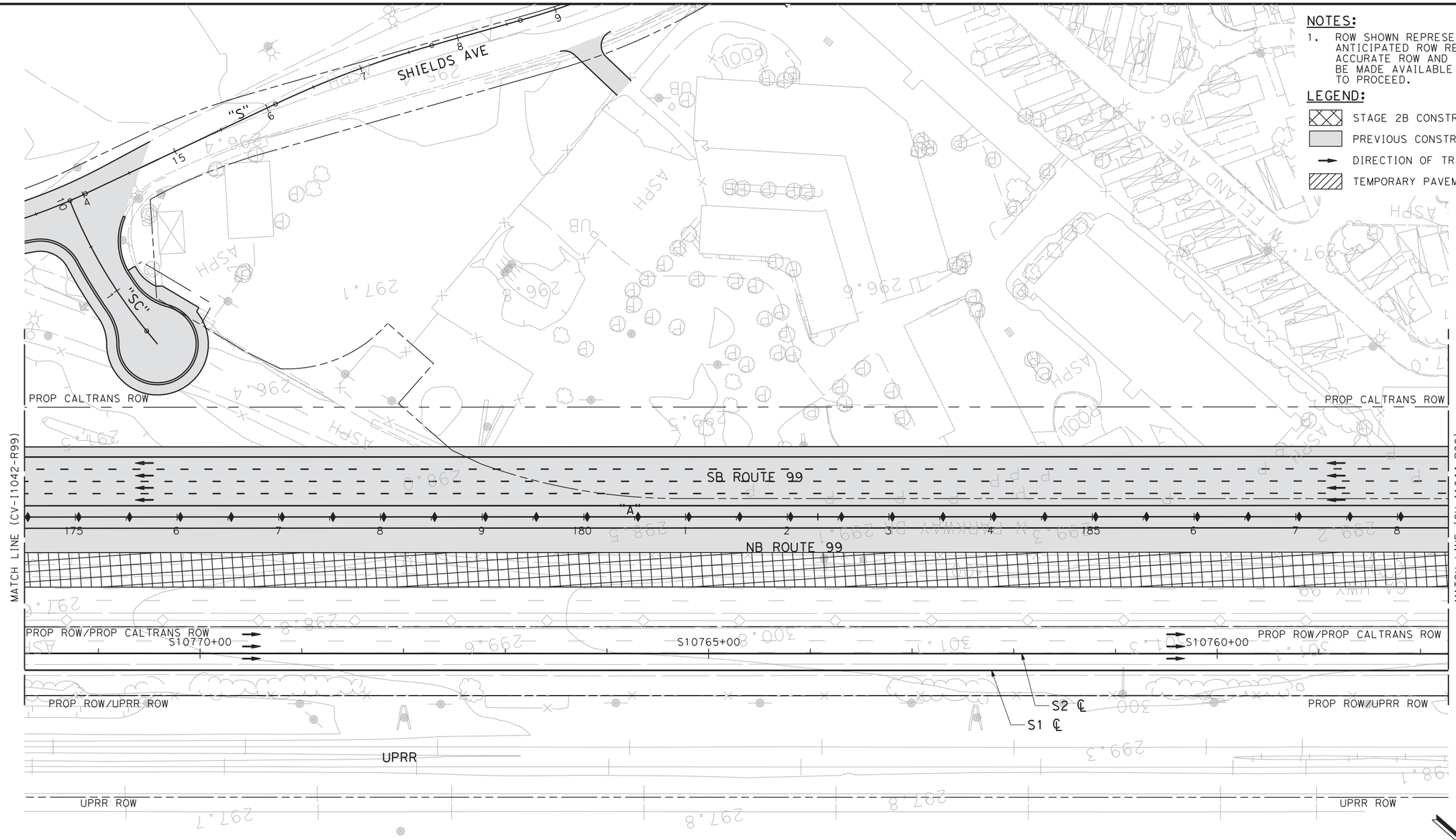

NOTES:

1. ROW SHOWN REPRESENTS THE MINIMUM ANTICIPATED ROW REQUIREMENTS. ACCURATE ROW AND ACCESS DATA WILL BE MADE AVAILABLE PRIOR TO NOTICE TO PROCEED.

LEGEND:

- STAGE 2B CONSTRUCTION
- PREVIOUS CONSTRUCTION
- DIRECTION OF TRAFFIC
- TEMPORARY PAVEMENT

50 0 50 100

1"=50'

SCALE APPLICABLE FOR FULL SIZE ONLY

REV	DATE	BY	CHK	APP	DESCRIPTION

DESIGNED BY C. BENSON
DRAWN BY R. MEZA
CHECKED BY L. HEUSTON
IN CHARGE F. NOBARI
DATE 11/22/11

PROPOSED PRELIMINARY DESIGN

NOT FOR CONSTRUCTION

AECOM Technical Services, Inc.
2020 L Street, Suite 300
Sacramento, CA 95811

CH2MHILL

CALIFORNIA HIGH-SPEED RAIL AUTHORITY

CALIFORNIA HIGH-SPEED TRAIN PROJECT
SIERRA SUBDIVISION
PACKAGE 1A
CONSTRUCTION STAGING
STAGE 2B
SR 99 RE-ALIGNMENT

CONTRACT NO.
DRAWING NO. CV-I1043-R99
SCALE AS SHOWN
SHEET NO.

ychiu 11/16/2011 2:48:07 AM CAHSRP-r1.tbl CHSR_half_black.plt C:\Documents and Settings\ychiu\My Documents\NDMProj\356751 - California High Speed Rail - SR99 Improvements\15-CV-I1043-STG2B-R99.

11/16/2011 2:49:07 AM CAHSRP-r1.tbl CHSR_half_black.plt C:\Documents and Settings\ychiu\My Documents\NDMProj\356751 - California High Speed Rail - SR99 Improvements\15-CV-I1044-STG2B-R99.
ychiu

NOTES:

1. ROW SHOWN REPRESENTS THE MINIMUM ANTICIPATED ROW REQUIREMENTS. ACCURATE ROW AND ACCESS DATA WILL BE MADE AVAILABLE PRIOR TO NOTICE TO PROCEED.

LEGEND:

- STAGE 2B CONSTRUCTION
- PREVIOUS CONSTRUCTION
- DIRECTION OF TRAFFIC
- TEMPORARY PAVEMENT

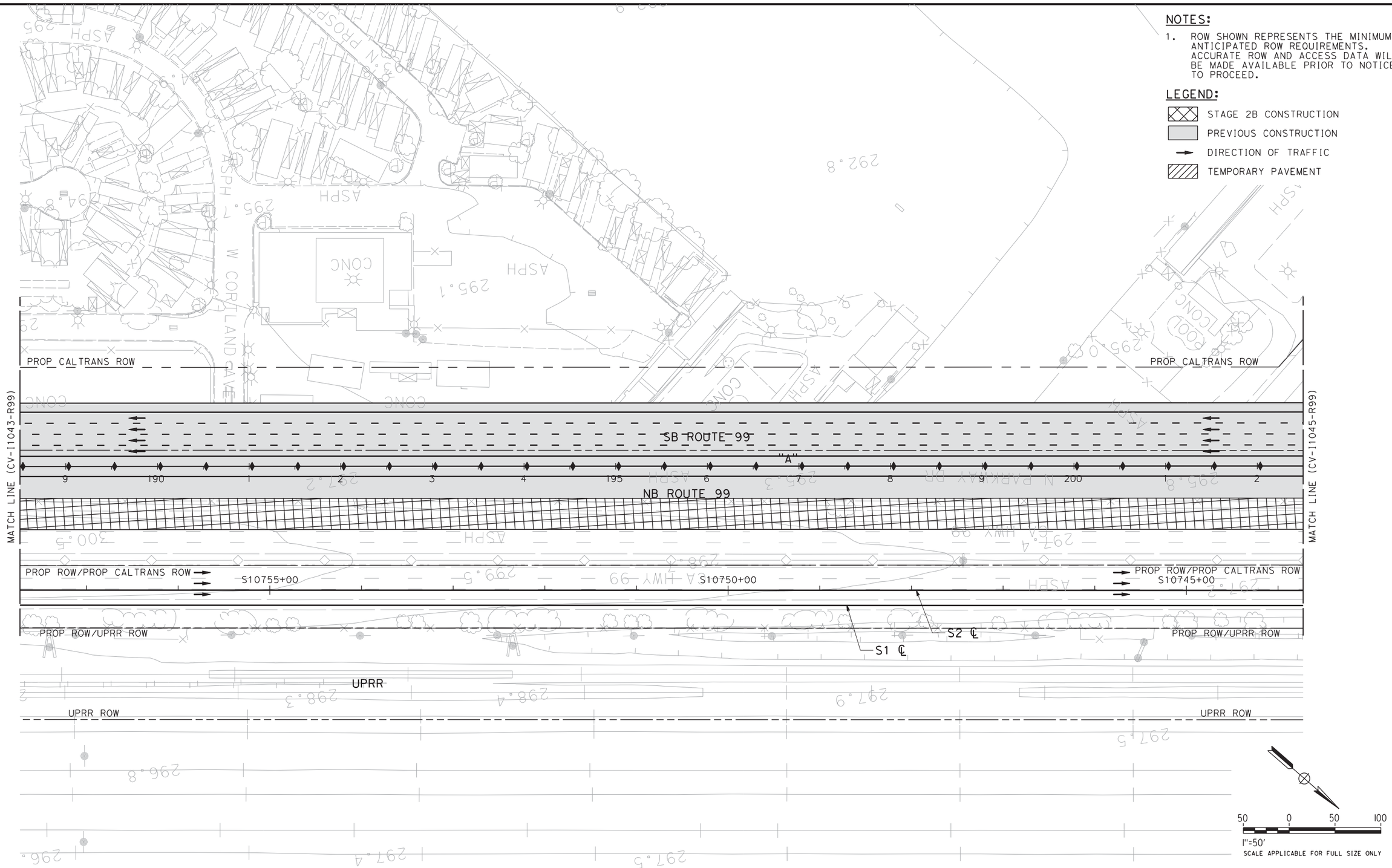

REV	DATE	BY	CHK	APP	DESCRIPTION

DESIGNED BY C. BENSON
DRAWN BY R. MEZA
CHECKED BY L. HEUSTON
IN CHARGE F. NOBARI
DATE 11/22/11

PROPOSED PRELIMINARY DESIGN

NOT FOR CONSTRUCTION

AECOM Technical Services, Inc.
2020 L Street, Suite 300
Sacramento, CA 95811
CH2MHILL

CALIFORNIA HIGH-SPEED RAIL AUTHORITY

CALIFORNIA HIGH-SPEED TRAIN PROJECT
SIERRA SUBDIVISION
PACKAGE 1A
CONSTRUCTION STAGING
STAGE 2B
SR 99 RE-ALIGNMENT

CONTRACT NO.
DRAWING NO. CV-I1044-R99
SCALE AS SHOWN
SHEET NO.

NOTES:

1. ROW SHOWN REPRESENTS THE MINIMUM ANTICIPATED ROW REQUIREMENTS. ACCURATE ROW AND ACCESS DATA WILL BE MADE AVAILABLE PRIOR TO NOTICE TO PROCEED.

LEGEND:

- STAGE 2B CONSTRUCTION
- PREVIOUS CONSTRUCTION
- DIRECTION OF TRAFFIC
- TEMPORARY PAVEMENT

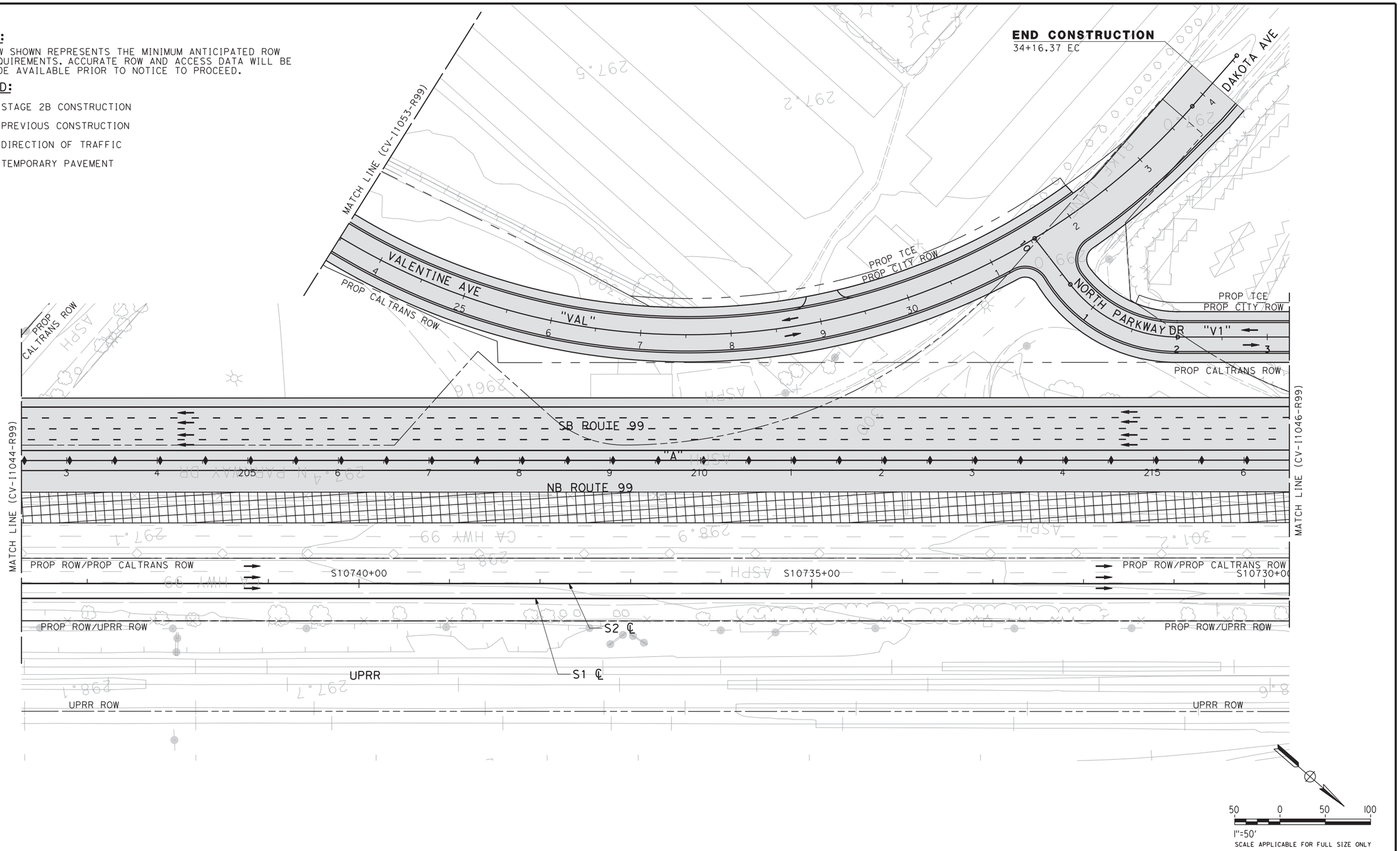

REV	DATE	BY	CHK	APP	DESCRIPTION

DESIGNED BY C. BENSON
DRAWN BY R. MEZA
CHECKED BY L. HEUSTON
IN CHARGE F. NOBARI
DATE 11/22/11

PROPOSED PRELIMINARY DESIGN

NOT FOR CONSTRUCTION

AECOM Technical Services, Inc.
2020 L Street, Suite 300
Sacramento, CA 95811
CH2MHILL

CALIFORNIA HIGH-SPEED RAIL AUTHORITY

CALIFORNIA HIGH-SPEED TRAIN PROJECT
SIERRA SUBDIVISION
PACKAGE 1A
CONSTRUCTION STAGING
STAGE 2B
SR 99 RE-ALIGNMENT

CONTRACT NO.
DRAWING NO. CV-I1045-R99
SCALE AS SHOWN
SHEET NO.

ychiu 11/16/2011 2:49:41 AM CAHSRP-r1.tbl CHSR_half_black.plt C:\Documents and Settings\ychiu\My Documents\NDMProj\356751 - California High Speed Rail - SR99 Improvements\15-CV-I1045-STG2B-R99.

2/13/2012 1:35:13 PM CAHSRP-R1.TBL CHSR_half_black-pdf995.pc*Documents and Settings\sleong\My Documents\NDMProj\356751 - California High Speed Rail - SR99 Improvements\1S-CV-I1046-STG2B-R99
sleong

LEGEND:

- STAGE 2A CONSTRUCTION
- PREVIOUS CONSTRUCTION
- DIRECTION OF TRAFFIC
- TEMPORARY PAVEMENT

NOTES:

1. ROW SHOWN REPRESENTS THE MINIMUM ANTICIPATED ROW REQUIREMENTS. ACCURATE ROW AND ACCESS DATA WILL BE MADE AVAILABLE PRIOR TO NOTICE TO PROCEED.
2. SHIFT TRAFFIC AS NECESSARY TO CONSTRUCT TIE-IN AT EXISTING AND PROPOSED SB ROUTE 99 ON-RAMP.
3. SHIFT TRAFFIC AS NECESSARY TO CONSTRUCT TIE-IN AT NB ROUTE 99 OFF-RAMP.

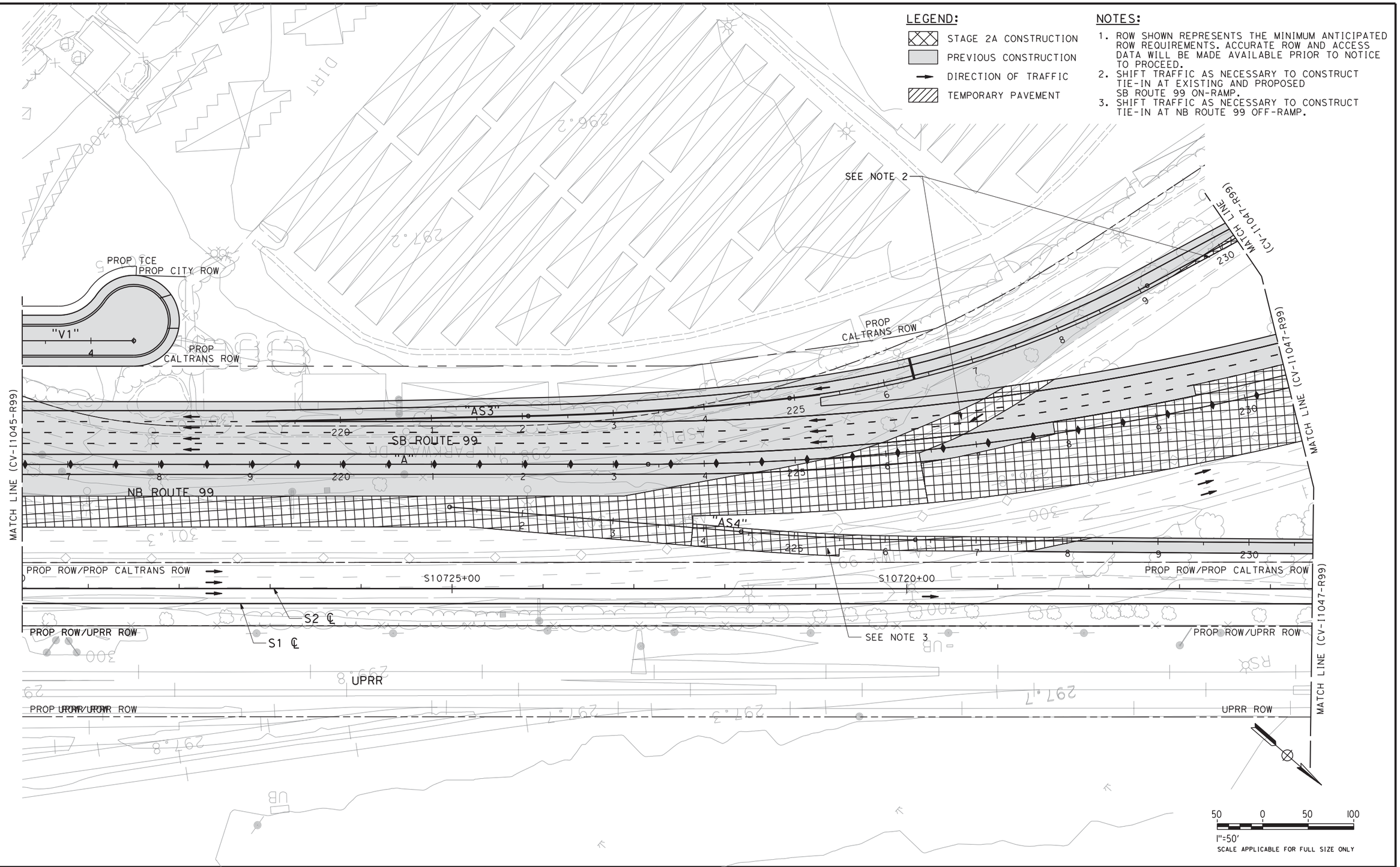

REV	DATE	BY	CHK	APP	DESCRIPTION

DESIGNED BY C. BENSON
DRAWN BY R. MEZA
CHECKED BY L. HEUSTON
IN CHARGE F. NOBARI
DATE 2/17/12

PROPOSED PRELIMINARY DESIGN

NOT FOR CONSTRUCTION

AECOM Technical Services, Inc.
2020 L Street, Suite 300
Sacramento, CA 95811
CH2MHILL

CALIFORNIA HIGH-SPEED RAIL AUTHORITY

CALIFORNIA HIGH-SPEED TRAIN PROJECT
SIERRA SUBDIVISION
PACKAGE 1A
CONSTRUCTION STAGING
STAGE 2B
SR 99 RE-ALIGNMENT

CONTRACT NO.
DRAWING NO. CV-I1046-R99
SCALE AS SHOWN
SHEET NO.

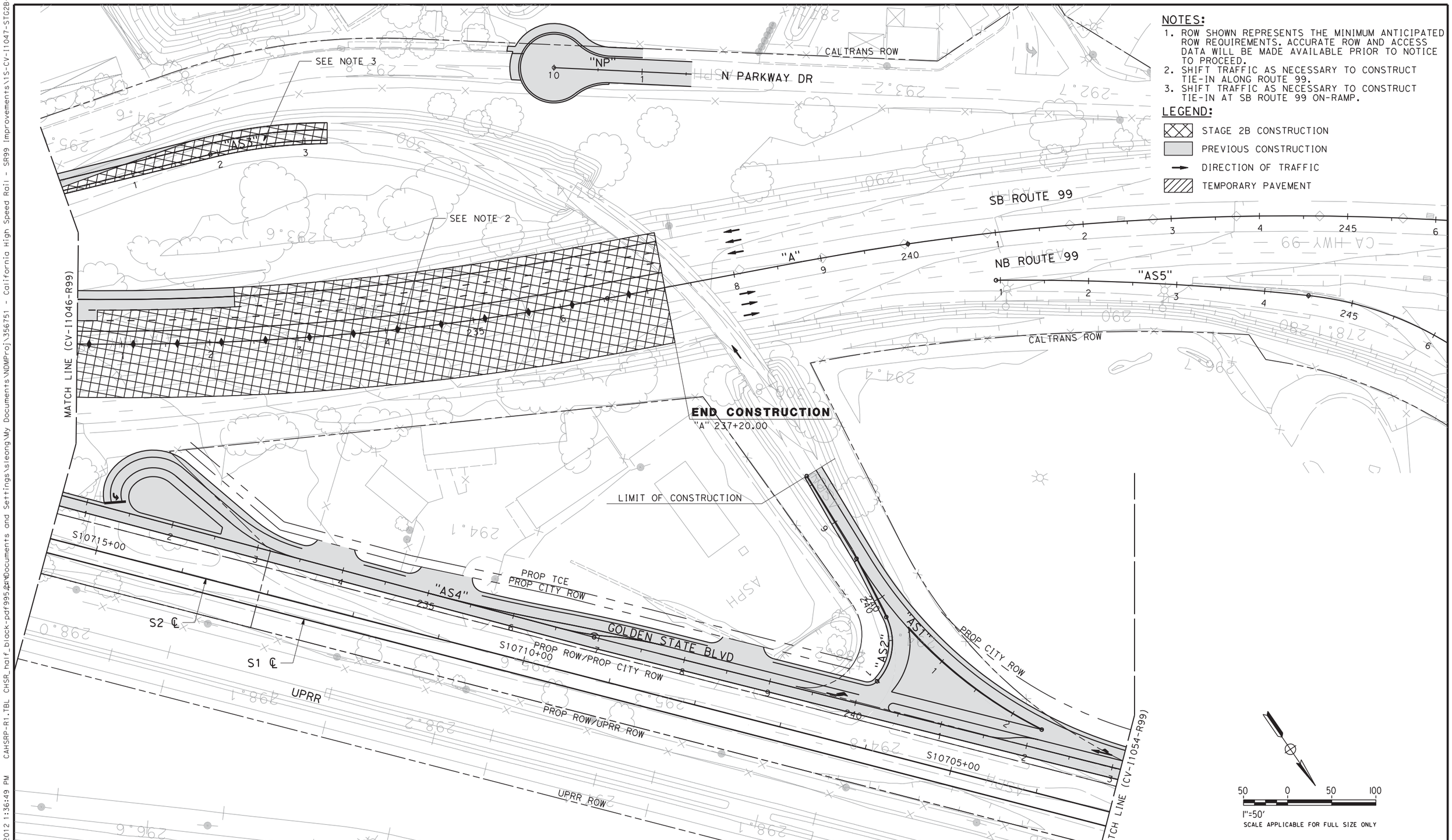

NOTES:

1. ROW SHOWN REPRESENTS THE MINIMUM ANTICIPATED ROW REQUIREMENTS. ACCURATE ROW AND ACCESS DATA WILL BE MADE AVAILABLE PRIOR TO NOTICE TO PROCEED.
2. SHIFT TRAFFIC AS NECESSARY TO CONSTRUCT TIE-IN ALONG ROUTE 99.
3. SHIFT TRAFFIC AS NECESSARY TO CONSTRUCT TIE-IN AT SB ROUTE 99 ON-RAMP.

LEGEND:

- STAGE 2B CONSTRUCTION
- PREVIOUS CONSTRUCTION
- DIRECTION OF TRAFFIC
- TEMPORARY PAVEMENT

REV	DATE	BY	CHK	APP	DESCRIPTION

DESIGNED BY C. BENSON
DRAWN BY R. MEZA
CHECKED BY L. HEUSTON
IN CHARGE F. NOBARI
DATE 2/17/12

PROPOSED PRELIMINARY DESIGN

NOT FOR CONSTRUCTION

AECOM Technical Services, Inc.
2020 L Street, Suite 300
Sacramento, CA 95811
CH2MHILL

CALIFORNIA HIGH-SPEED RAIL AUTHORITY

CALIFORNIA HIGH-SPEED TRAIN PROJECT
SIERRA SUBDIVISION
PACKAGE 1A
CONSTRUCTION STAGING
STAGE 2B
SR 99 RE-ALIGNMENT

CONTRACT NO.
DRAWING NO. CV-I1047-R99
SCALE AS SHOWN
SHEET NO.

2/13/2012 1:36:49 PM CAHSRP-R1.TBL CHSR_half_black-pdf995.pc sleong C:\Documents and Settings\sleong\My Documents\NDMProj\356751 - California High Speed Rail - SR99 Improvements\1S-CV-I1047-STG2B-R99

2/14/2012 11:05:32 AM CAHSRP-R1.TBL CHSR_half_black-pdf995.pdf C:\Documents and Settings\sleong\My Documents\NDMProj\356751 - California High Speed Rail - SR99 Improvements\1S-CV-I1048-STG2B-R99

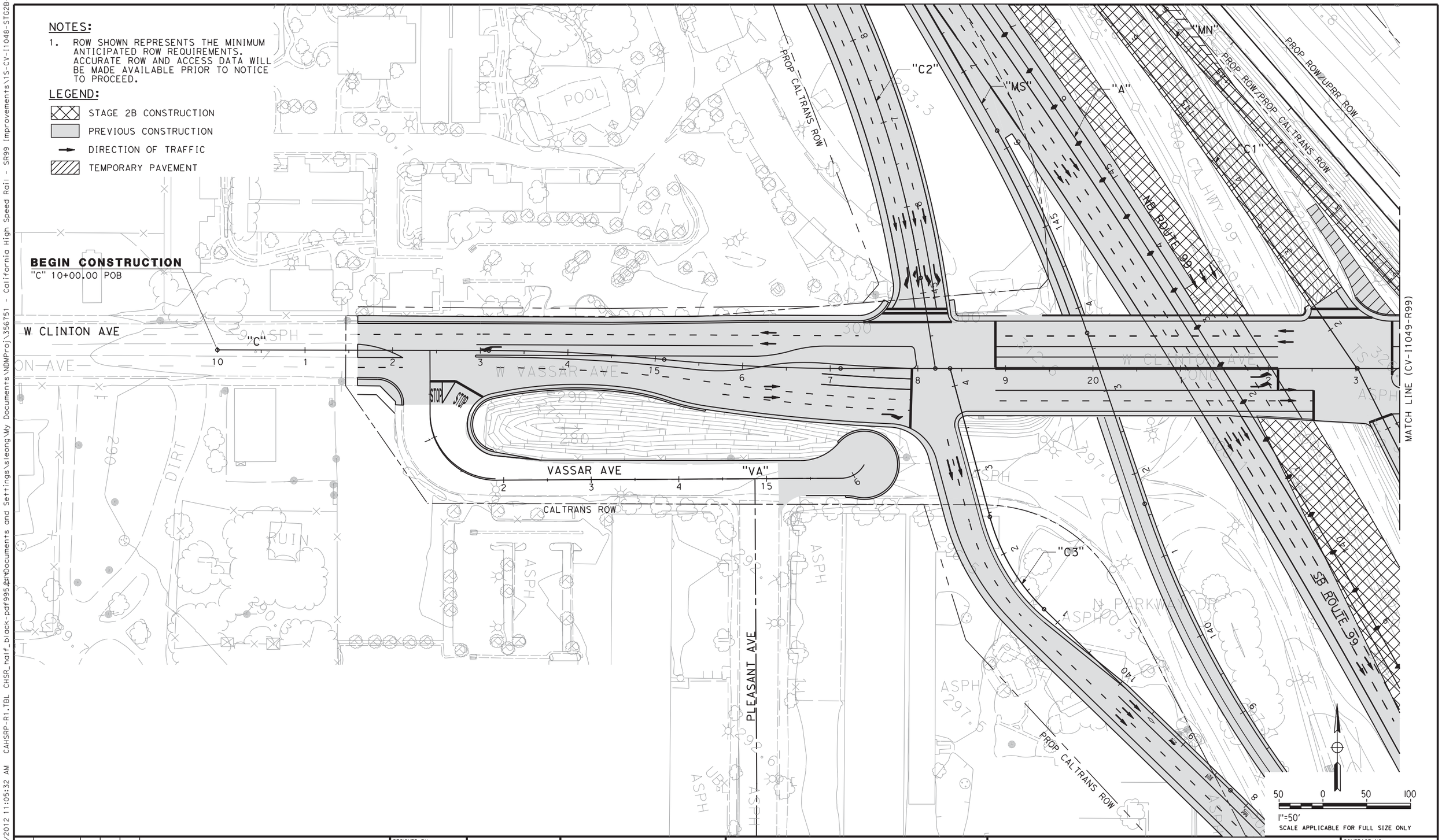

REV	DATE	BY	CHK	APP	DESCRIPTION

DESIGNED BY C. BENSON
DRAWN BY R. MEZA
CHECKED BY L. HEUSTON
IN CHARGE F. NOBARI
DATE 2/17/12

15% DRAFT
SUBMITTED FOR INTERNAL USE ONLY
NOT FOR CONSTRUCTION

AECOM Technical Services, Inc.
2020 L Street, Suite 300
Sacramento, CA 95811
CH2MHILL

CALIFORNIA HIGH-SPEED RAIL AUTHORITY

CALIFORNIA HIGH-SPEED TRAIN PROJECT
SIERRA SUBDIVISION
PACKAGE 1A
CONSTRUCTION STAGING
STAGE 2B
SR 99 RE-ALIGNMENT

CONTRACT NO.
DRAWING NO. CV-I1048-R99
SCALE AS SHOWN
SHEET NO.

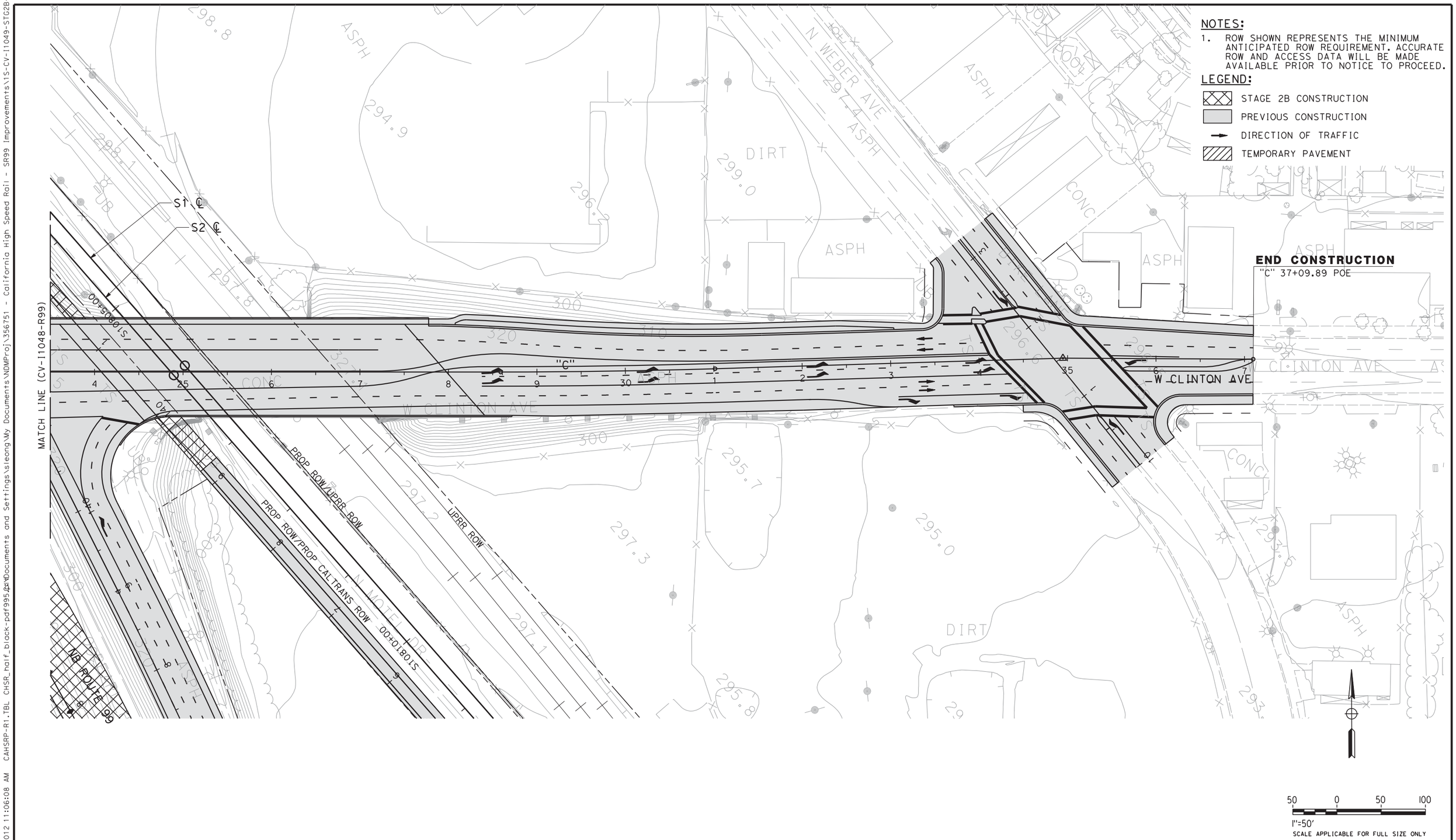

REV	DATE	BY	CHK	APP	DESCRIPTION

DESIGNED BY C. BENSON
DRAWN BY R. MEZA
CHECKED BY L. HEUSTON
IN CHARGE F. NOBARI
DATE 2/17/12

PROPOSED PRELIMINARY DESIGN

NOT FOR CONSTRUCTION

AECOM Technical Services, Inc.
2020 L Street, Suite 300
Sacramento, CA 95811

CH2MHILL

CALIFORNIA HIGH-SPEED RAIL AUTHORITY

CALIFORNIA HIGH-SPEED TRAIN PROJECT
SIERRA SUBDIVISION
PACKAGE 1A
CONSTRUCTION STAGING
STAGE 2B
SR 99 RE-ALIGNMENT

CONTRACT NO.
DRAWING NO. CV-I1049-R99
SCALE AS SHOWN
SHEET NO.

sleong 2/14/2012 11:06:08 AM CAHSRP-R1.TBL CHSR_half_black-pdf995.pt C:\Documents and Settings\sleong\My Documents\NDMProj\356751 - California High Speed Rail - SR99 Improvements\1S-CV-I1049-STG2B-R99

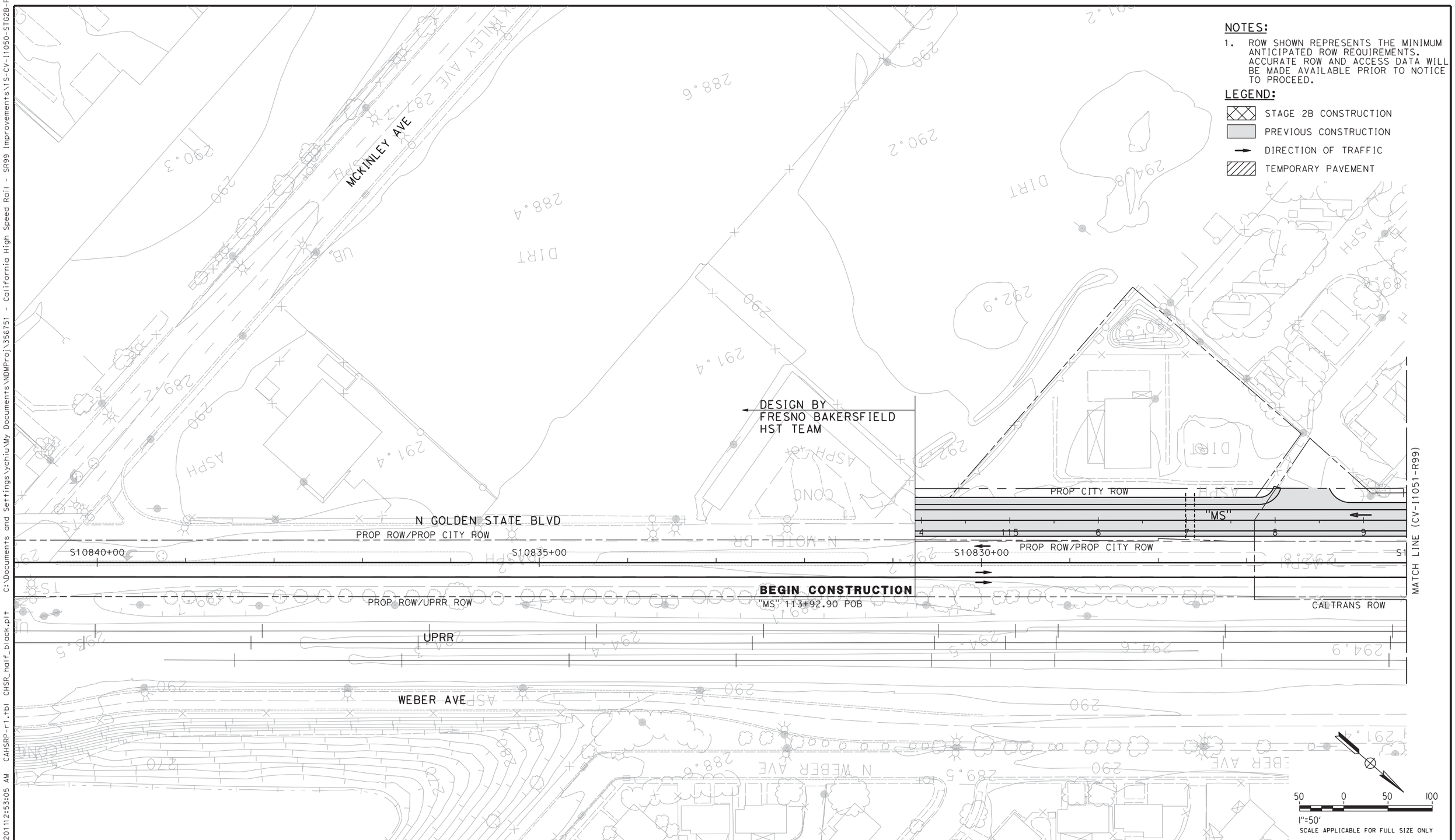

REV	DATE	BY	CHK	APP	DESCRIPTION

DESIGNED BY C. BENSON
DRAWN BY R. MEZA
CHECKED BY L. HEUSTON
IN CHARGE F. NOBARI
DATE 11/22/11

PROPOSED PRELIMINARY DESIGN

NOT FOR CONSTRUCTION

AECOM Technical Services, Inc.
2020 L Street, Suite 300
Sacramento, CA 95811
CH2MHILL

CALIFORNIA HIGH-SPEED RAIL AUTHORITY

CALIFORNIA HIGH-SPEED TRAIN PROJECT
SIERRA SUBDIVISION
PACKAGE 1A
CONSTRUCTION STAGING
STAGE 2B
SR 99 RE-ALIGNMENT

CONTRACT NO.
DRAWING NO. CV-I1050-R99
SCALE AS SHOWN
SHEET NO.

11/16/2011 2:53:05 AM CAHSRP-r1.tbl CHSR_half_black.plt C:\Documents and Settings\ychiu\My Documents\NDMProj\356751 - California High Speed Rail - SR99 Improvements\1S-CV-I1050-STG2B-R99.
ychiu

11/16/2011 2:53:50 AM CAHSRP-r1.tbl CHSR_half_black.plt C:\Documents and Settings\ychiu\My Documents\NDMProj\356751 - California High Speed Rail - SR99 Improvements\1S-CV-I1051-STG2B-R99.dgn
ychiu

NOTES:

1. ROW SHOWN REPRESENTS THE MINIMUM ANTICIPATED ROW REQUIREMENTS. ACCURATE ROW AND ACCESS DATA WILL BE MADE AVAILABLE PRIOR TO NOTICE TO PROCEED.

LEGEND:

- STAGE 2B CONSTRUCTION
- PREVIOUS CONSTRUCTION
- DIRECTION OF TRAFFIC
- TEMPORARY PAVEMENT

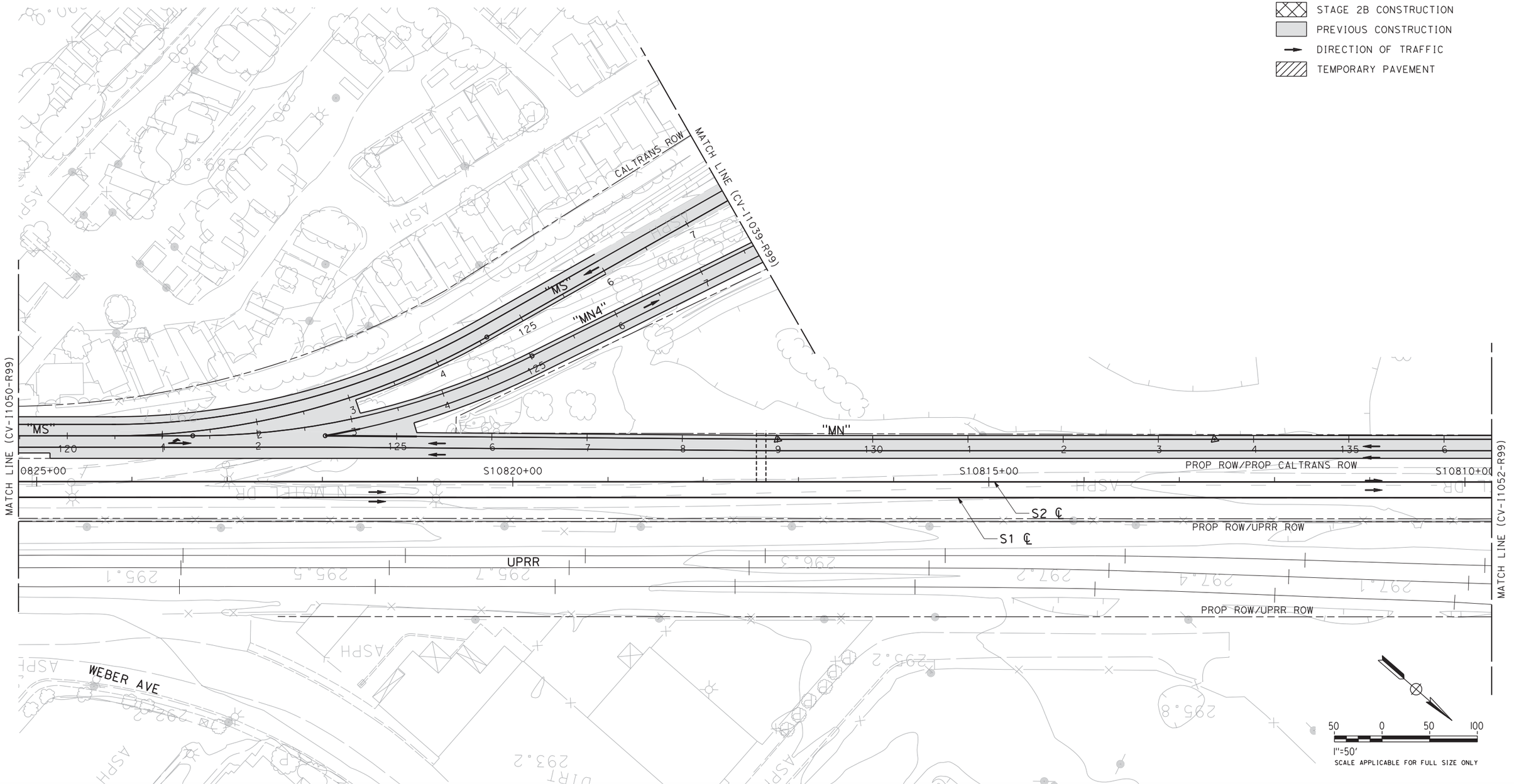

REV	DATE	BY	CHK	APP	DESCRIPTION

DESIGNED BY C. BENSON
DRAWN BY R. MEZA
CHECKED BY L. HEUSTON
IN CHARGE F. NOBARI
DATE 11/22/11

PROPOSED PRELIMINARY DESIGN

NOT FOR CONSTRUCTION

AECOM Technical Services, Inc.
2020 L Street, Suite 300
Sacramento, CA 95811
CH2MHILL

CALIFORNIA HIGH-SPEED RAIL AUTHORITY

CALIFORNIA HIGH-SPEED TRAIN PROJECT
SIERRA SUBDIVISION
PACKAGE 1A
CONSTRUCTION STAGING
STAGE 2B
SR 99 RE-ALIGNMENT

CONTRACT NO.
DRAWING NO. CV-I1051-R99
SCALE AS SHOWN
SHEET NO.

11/16/2011 12:54:41 AM CAHSRP-r1.tbl CHSR_half_black.plt C:\Documents and Settings\ychiu\My Documents\NDMProj\356751 - California High Speed Rail - SR99 Improvements\15-CV-I1052-STG2B-R99.
ychiu

NOTES:

1. ROW SHOWN REPRESENTS THE MINIMUM ANTICIPATED ROW REQUIREMENTS. ACCURATE ROW AND ACCESS DATA WILL BE MADE AVAILABLE PRIOR TO NOTICE TO PROCEED.

LEGEND:

- STAGE 2B CONSTRUCTION
- PREVIOUS CONSTRUCTION
- DIRECTION OF TRAFFIC
- TEMPORARY PAVEMENT

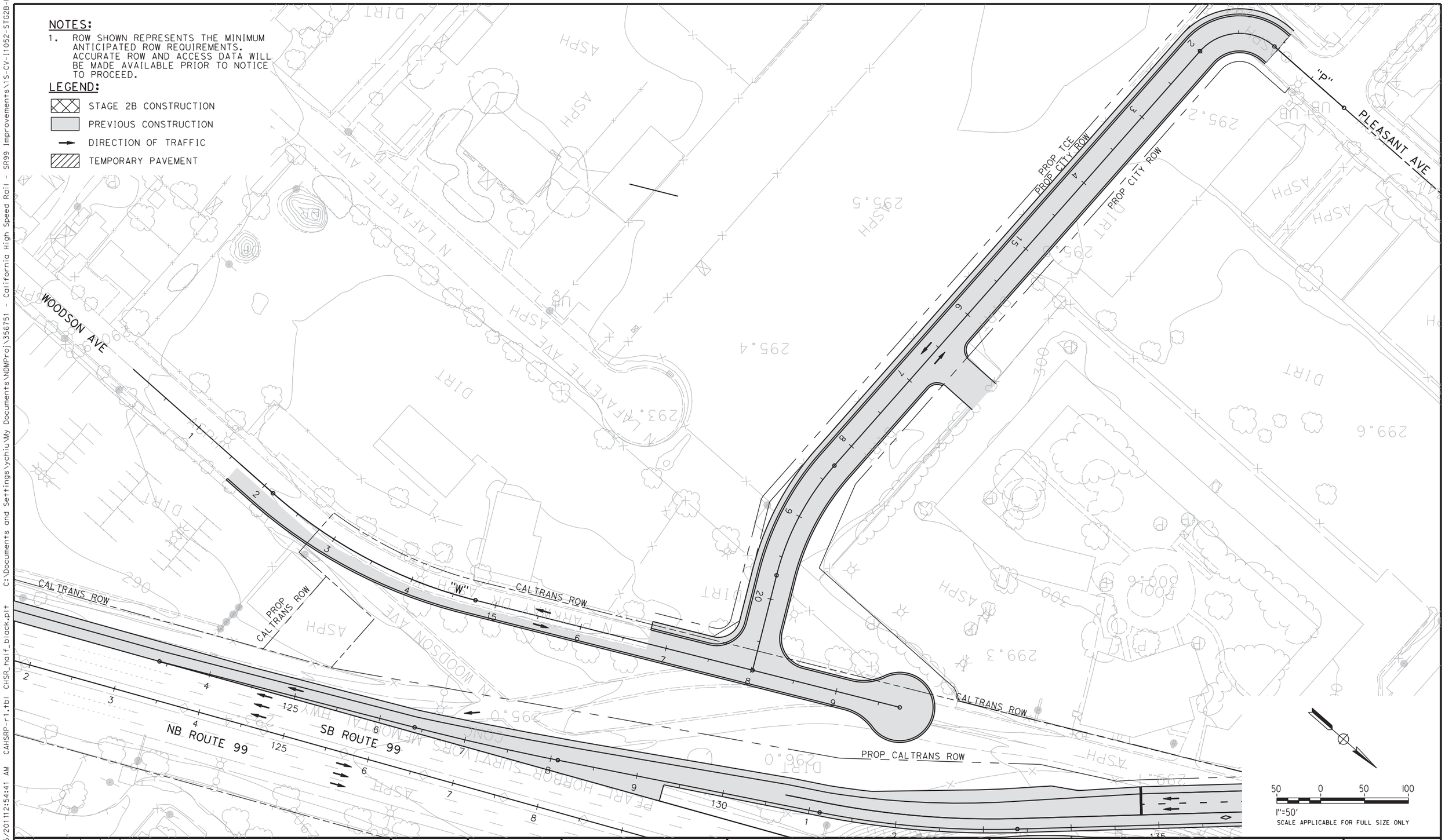

REV	DATE	BY	CHK	APP	DESCRIPTION

DESIGNED BY C. BENSON
DRAWN BY R. MEZA
CHECKED BY L. HEUSTON
IN CHARGE F. NOBARI
DATE 11/22/11

PROPOSED PRELIMINARY DESIGN

NOT FOR CONSTRUCTION

AECOM Technical Services, Inc.
2020 L Street, Suite 300
Sacramento, CA 95811
CH2MHILL

CALIFORNIA HIGH-SPEED RAIL AUTHORITY

CALIFORNIA HIGH-SPEED TRAIN PROJECT
SIERRA SUBDIVISION
PACKAGE 1A
CONSTRUCTION STAGING
STAGE 2B
SR 99 RE-ALIGNMENT

CONTRACT NO.
DRAWING NO. CV-I1052-R99
SCALE AS SHOWN
SHEET NO.

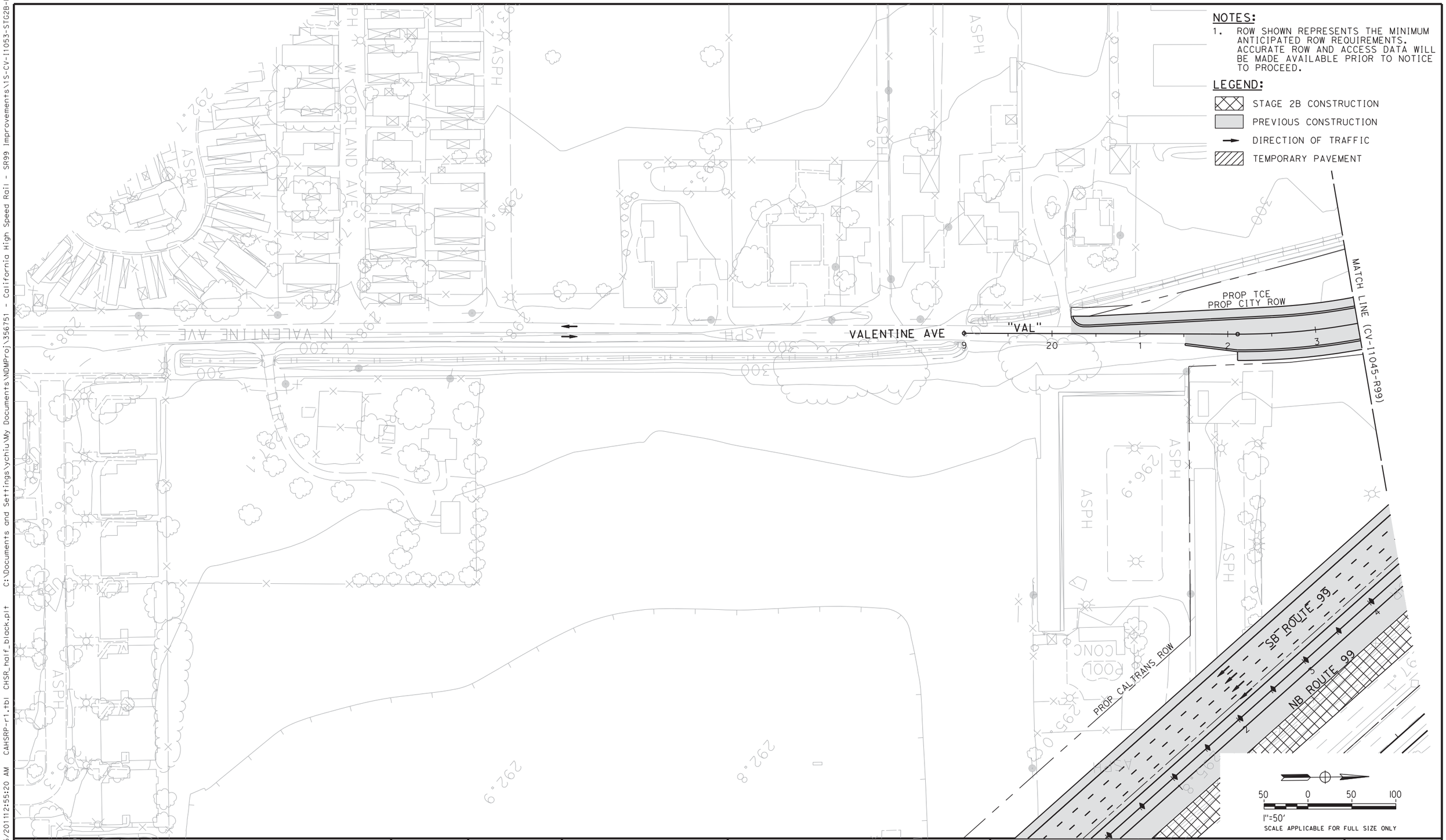

REV	DATE	BY	CHK	APP	DESCRIPTION

DESIGNED BY C. BENSON
DRAWN BY R. MEZA
CHECKED BY L. HEUSTON
IN CHARGE F. NOBARI
DATE 11/22/11

PROPOSED PRELIMINARY DESIGN

NOT FOR CONSTRUCTION

AECOM Technical Services, Inc.
2020 L Street, Suite 300
Sacramento, CA 95811
CH2MHILL

CALIFORNIA HIGH-SPEED RAIL AUTHORITY

CALIFORNIA HIGH-SPEED TRAIN PROJECT
SIERRA SUBDIVISION
PACKAGE 1A
CONSTRUCTION STAGING
STAGE 2B
SR 99 RE-ALIGNMENT

CONTRACT NO.
DRAWING NO. CV-I1053-R99
SCALE AS SHOWN
SHEET NO.

11/16/2011 2:55:20 AM CAHSRP-r1.tbl CHSR_half_black.plt C:\Documents and Settings\ychiu\My Documents\NDMProj\356751 - California High Speed Rail - SR99 Improvements\15-CV-I1053-STG2B-R99.
ychiu

2/13/2012 1:38:31 PM CAHSRP-R1.TBL CHSR_half_black-pdf995.pc N:\Documents and Settings\sleong\My Documents\NDMProj\356751 - California High Speed Rail - SR99 Improvements\1S-CV-I1054-STG2B-R99 sleong

NOTES:

1. ROW SHOWN REPRESENTS THE MINIMUM ANTICIPATED ROW REQUIREMENTS. ACCURATE ROW AND ACCESS DATA WILL BE MADE AVAILABLE PRIOR TO NOTICE TO PROCEED.
2. CONSTRUCT ASHLAN AVE/GOLDEN STATE BLVD INTERSECTION AND SHIFT TRAFFIC AS NECESSARY.
3. CONSTRUCT SB ROUTE 99 OFFRAMP TO GOLDEN STATE BLVD AND NB ROUTE 99 ON RAMP.

LEGEND:

- STAGE 2B CONSTRUCTION
- PREVIOUS CONSTRUCTION
- DIRECTION OF TRAFFIC
- TEMPORARY PAVEMENT

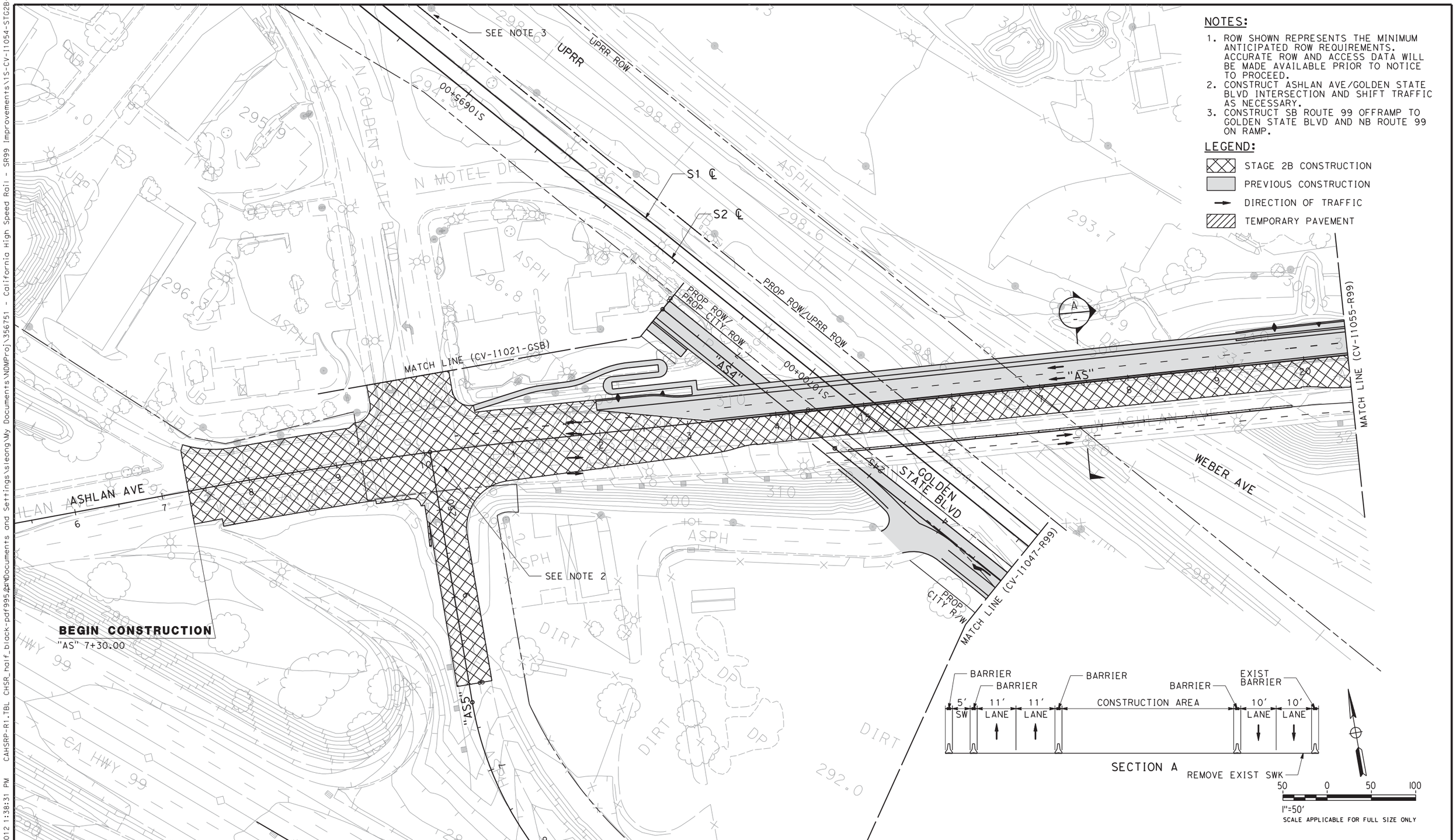

REV	DATE	BY	CHK	APP	DESCRIPTION

DESIGNED BY C. BENSON
DRAWN BY R. MEZA
CHECKED BY L. HEUSTON
IN CHARGE F. NOBARI
DATE 2/17/12

PROPOSED PRELIMINARY DESIGN

NOT FOR CONSTRUCTION

AECOM Technical Services, Inc.
2020 L Street, Suite 300
Sacramento, CA 95811
CH2MHILL

CALIFORNIA HIGH-SPEED RAIL AUTHORITY

CALIFORNIA HIGH-SPEED TRAIN PROJECT
SIERRA SUBDIVISION
PACKAGE 1A
CONSTRUCTION STAGING
STAGE 2B
SR 99 RE-ALIGNMENT

CONTRACT NO.
DRAWING NO. CV-I1054-R99
SCALE AS SHOWN
SHEET NO.

2/13/2012 1:40:10 PM CAHSRP-R1.TBL CHSR_half_black-pdf995.pc3 C:\Documents and Settings\sleong\My Documents\NDMProj\356751 - California High Speed Rail - SR99 Improvements\1S-CV-I1055-STG2B-R99
sleong

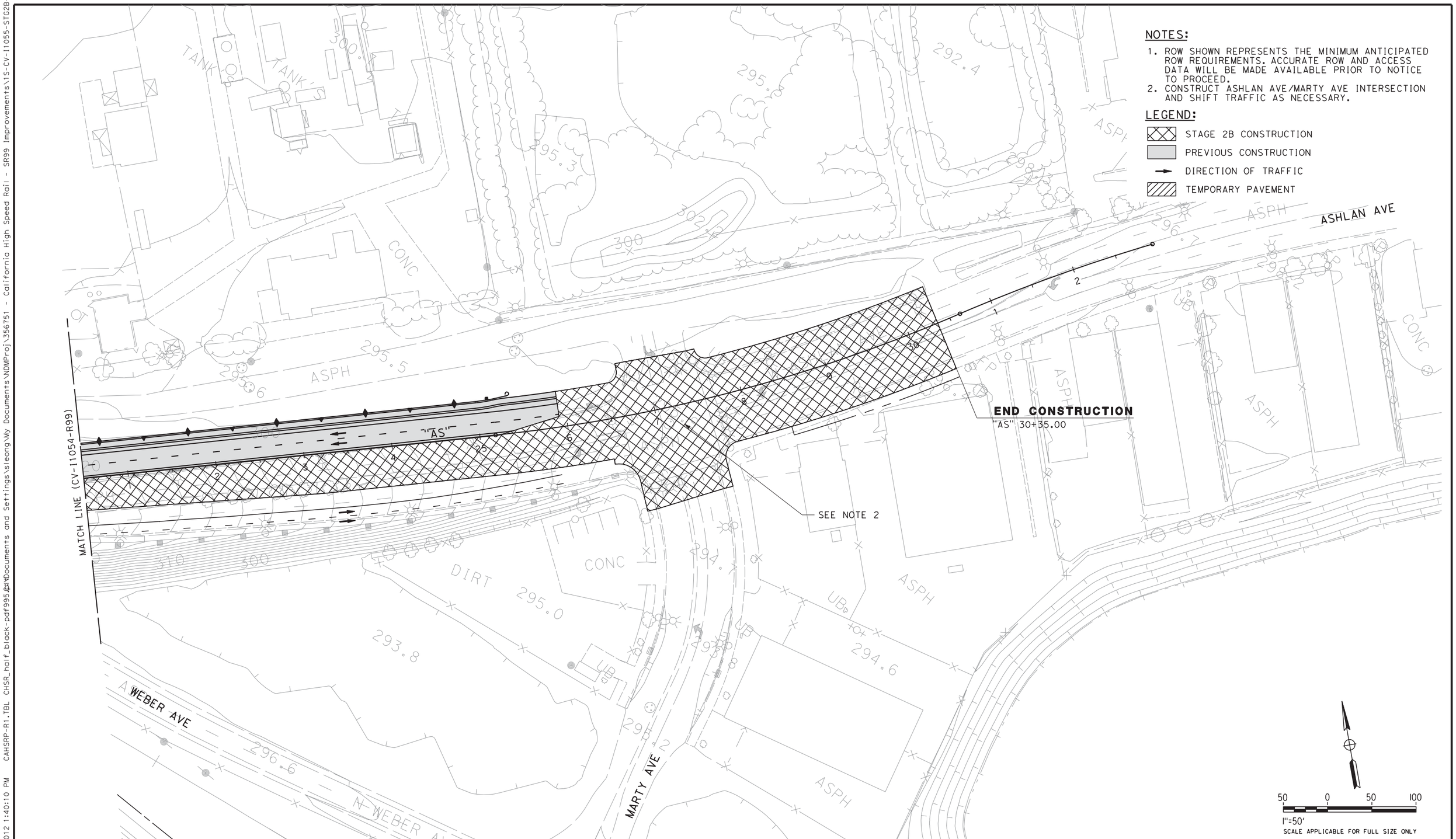

NOTES:

1. ROW SHOWN REPRESENTS THE MINIMUM ANTICIPATED ROW REQUIREMENTS. ACCURATE ROW AND ACCESS DATA WILL BE MADE AVAILABLE PRIOR TO NOTICE TO PROCEED.
2. CONSTRUCT ASHLAN AVE/MARTY AVE INTERSECTION AND SHIFT TRAFFIC AS NECESSARY.

LEGEND:

- STAGE 2B CONSTRUCTION
- PREVIOUS CONSTRUCTION
- DIRECTION OF TRAFFIC
- TEMPORARY PAVEMENT

REV	DATE	BY	CHK	APP	DESCRIPTION

DESIGNED BY C. BENSON
DRAWN BY R. MEZA
CHECKED BY L. HEUSTON
IN CHARGE F. NOBARI
DATE 2/17/12

PROPOSED PRELIMINARY DESIGN

NOT FOR CONSTRUCTION

AECOM Technical Services, Inc.
2020 L Street, Suite 300
Sacramento, CA 95811
CH2MHILL

CALIFORNIA HIGH-SPEED RAIL AUTHORITY

CALIFORNIA HIGH-SPEED TRAIN PROJECT
SIERRA SUBDIVISION
PACKAGE 1A
CONSTRUCTION STAGING
STAGE 2B
SR 99 RE-ALIGNMENT

CONTRACT NO.
DRAWING NO. CV-I1055-R99
SCALE AS SHOWN
SHEET NO.

LEGEND:

- ROCK SLOPE PROTECTION (RSP)
- DRAINAGE INLET OR CATCH BASIN
- SD — STORM DRAIN
- EARTHEN DITCH, OR BIOFILTRATION SWALE, OR GRADE TO DRAIN
- REMOVAL ITEMS
- BASIN AREA REMOVED
- BASIN BOUNDARY
- IFB XXXX — PROPOSED BMP LOCATION
- SURFACE FLOW DIRECTION

ABBREVIATIONS:

FMFCD	FRESNO METROPOLITAN FLOOD CONTROL DISTRICT
OSD	OVERSIDE DRAIN
POC	POINT OF CONNECTION

GENERAL DRAINAGE NOTES:

1. ROW SHOWN REPRESENTS THE MINIMUM ANTICIPATED ROW REQUIREMENTS. ACCURATE ROW AND ACCESS DATA WILL BE MADE AVAILABLE PRIOR TO NOTICE TO PROCEED.
2. HORIZONTAL AND VERTICAL LOCATIONS OF EXISTING STORM DRAINS ARE BASED ON BEST AVAILABLE INFORMATION. CONTRACTOR SHALL VERIFY LOCATIONS AND ELEVATIONS OF ALL STORM DRAINS.
3. ALL STORM DRAIN LOCATED WITHIN CALTRANS RIGHT OF WAY OWNED BY CALTRANS. ALL OTHER STORM DRAIN OWNED BY FMFCD UNLESS NOTED OTHERWISE.
4. THE FMFCD "FUTURE" STORM DRAINS SHOWN ON THE PLANS ARE FOR REFERENCE ONLY, AND WILL BE CONSTRUCTED BY FMFCD AT A LATER DATE, UNLESS OTHERWISE NOTED. LOCATIONS WHERE THE "FUTURE" DRAINS ARE TO BE CONSTRUCTED AS PART OF THIS PROJECT, THE CONTRACTOR SHALL COORDINATE WITH THE FMFCD FOR STORM DRAIN SIZE, MATERIAL, AND LOCATION.

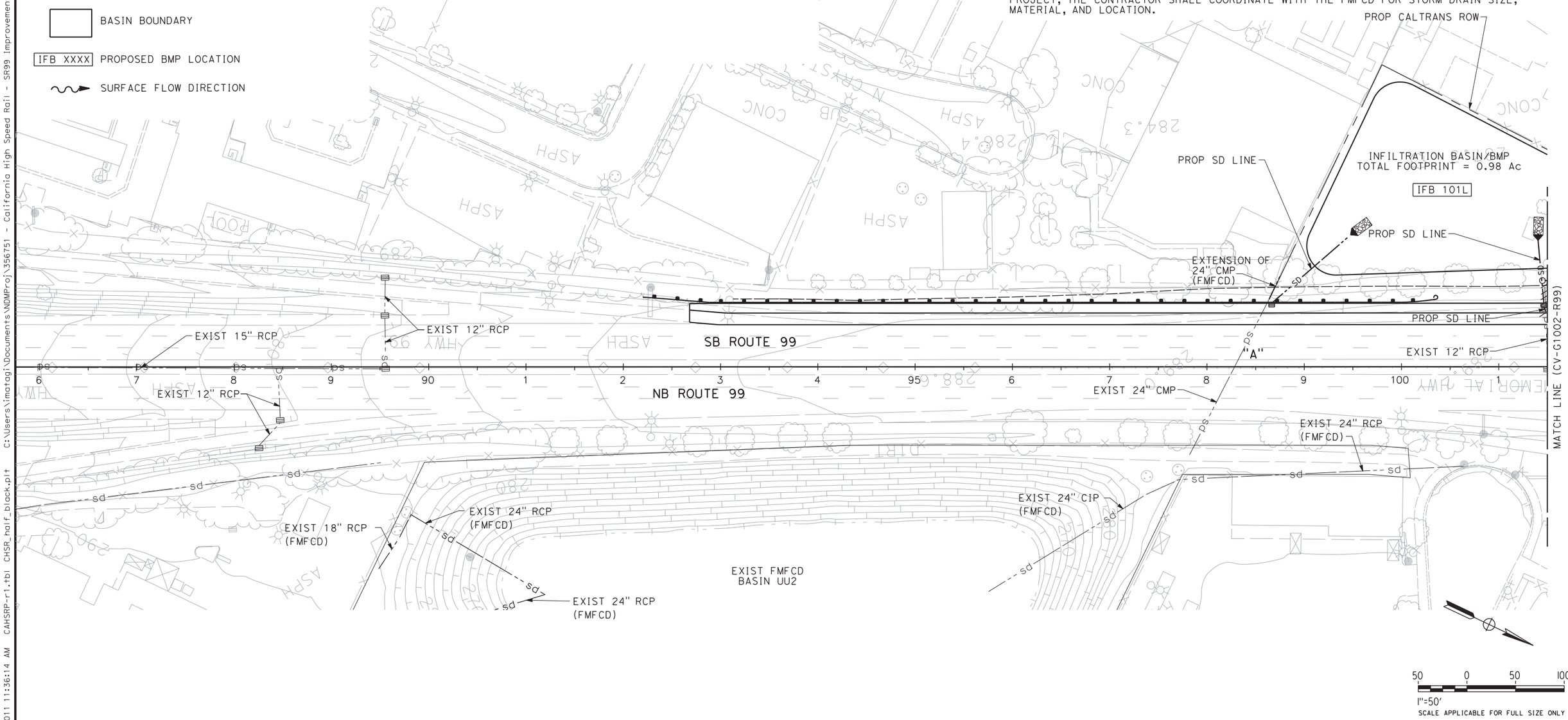

REV	DATE	BY	CHK	APP	DESCRIPTION

DESIGNED BY I. MATAGI
DRAWN BY J. TYLER
CHECKED BY R. HENDERSON
IN CHARGE F. NOBARI
DATE 12/08/11

PROPOSED PRELIMINARY DESIGN

NOT FOR CONSTRUCTION

AECOM Technical Services, Inc.
2020 L Street, Suite 300
Sacramento, CA 95811
CH2MHILL

CALIFORNIA HIGH-SPEED RAIL AUTHORITY

CALIFORNIA HIGH-SPEED TRAIN PROJECT
SIERRA SUBDIVISION
PACKAGE 1A
ROADWAY
GRADING AND DRAINAGE PLAN
SR 99 RE-ALIGNMENT

CONTRACT NO.
DRAWING NO. CV-G1001-R99
SCALE AS SHOWN
SHEET NO.

imatagi 12/2/2011 11:36:14 AM CAHSRP-r1.tbl CHSR_half_black.plt C:\Users\imatagi\Documents\NDMProj\356751 - California High Speed Rail - SR99 Improvements\1S-CV-G1001-R99.dgn
12/2/2011 11:36:15 AM

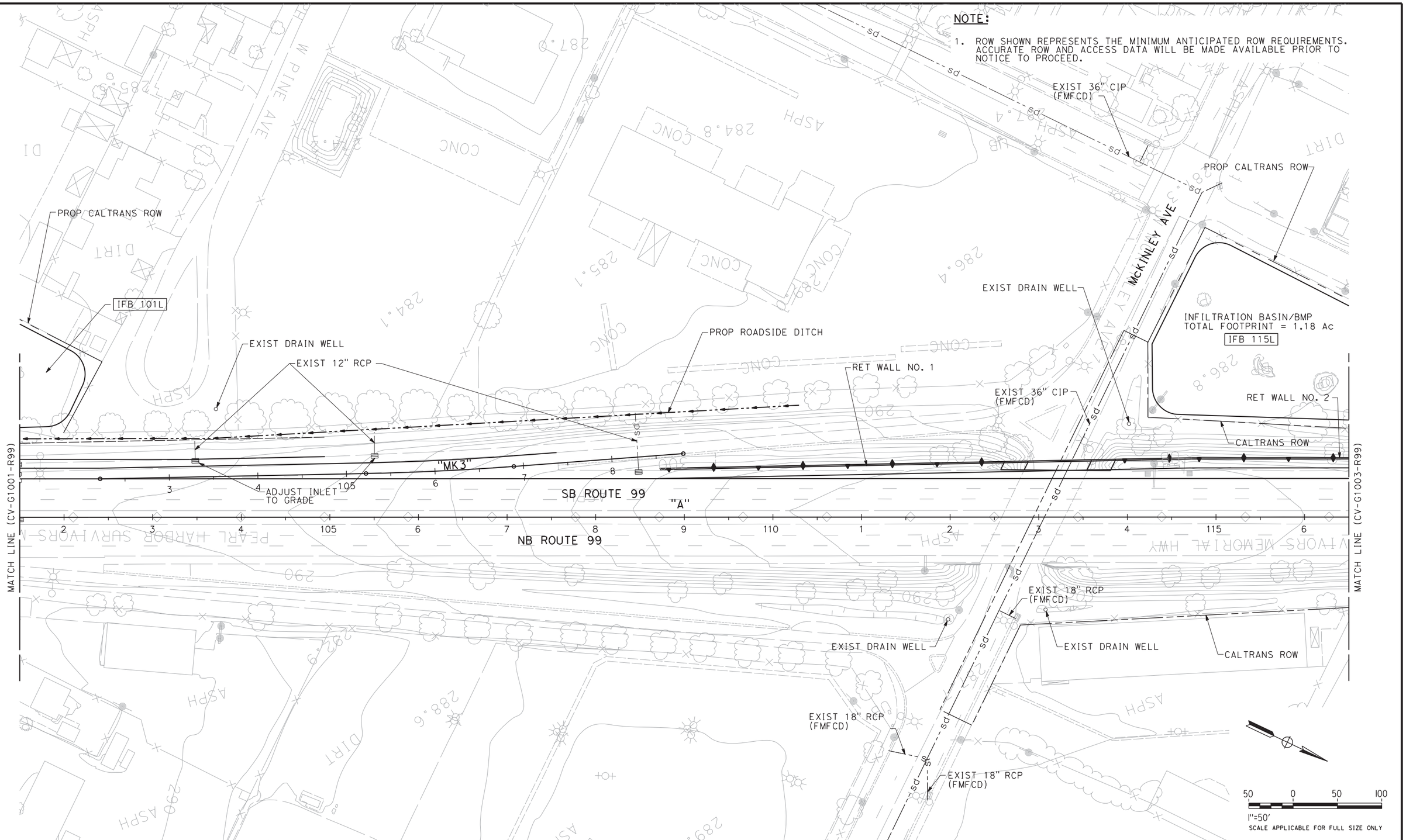

REV	DATE	BY	CHK	APP	DESCRIPTION

DESIGNED BY I. MATAGI
DRAWN BY J. TYLER
CHECKED BY R. HENDERSON
IN CHARGE F. NOBARI
DATE 12/08/11

PROPOSED PRELIMINARY DESIGN

NOT FOR CONSTRUCTION

AECOM Technical Services, Inc.
2020 L Street, Suite 300
Sacramento, CA 95811
CH2MHILL

CALIFORNIA HIGH-SPEED RAIL AUTHORITY

CALIFORNIA HIGH-SPEED TRAIN PROJECT
SIERRA SUBDIVISION
PACKAGE 1A
ROADWAY
GRADING AND DRAINAGE PLAN
SR 99 RE-ALIGNMENT

CONTRACT NO.
DRAWING NO. CV-G1002-R99
SCALE AS SHOWN
SHEET NO.

imatagi 12/2/2011 11:37:13 AM CAHSRP-r1.tbl CHSR_half_black.plt C:\Users\imatagi\Documents\NDMProj\356751 - California High Speed Rail - SR99 Improvements\1S-CV-G1002-R99.dgn

2/16/2012 5:43:27 PM CAHSRP-R1.TBL CHSR_half_black.plt C:\Documents and Settings\ychiu\My Documents\NDMProj\356751 - California High Speed Rail - SR99 Improvements\15-CV-G1003-R99_OPTION

NOTES:

1. ROW SHOWN REPRESENTS THE MINIMUM ANTICIPATED ROW REQUIREMENTS. ACCURATE ROW AND ACCESS DATA WILL BE MADE AVAILABLE PRIOR TO NOTICE TO PROCEED.
2. SEE SHEET CV-G1016-R99 FOR WOODSON AND PLEASANT AVE

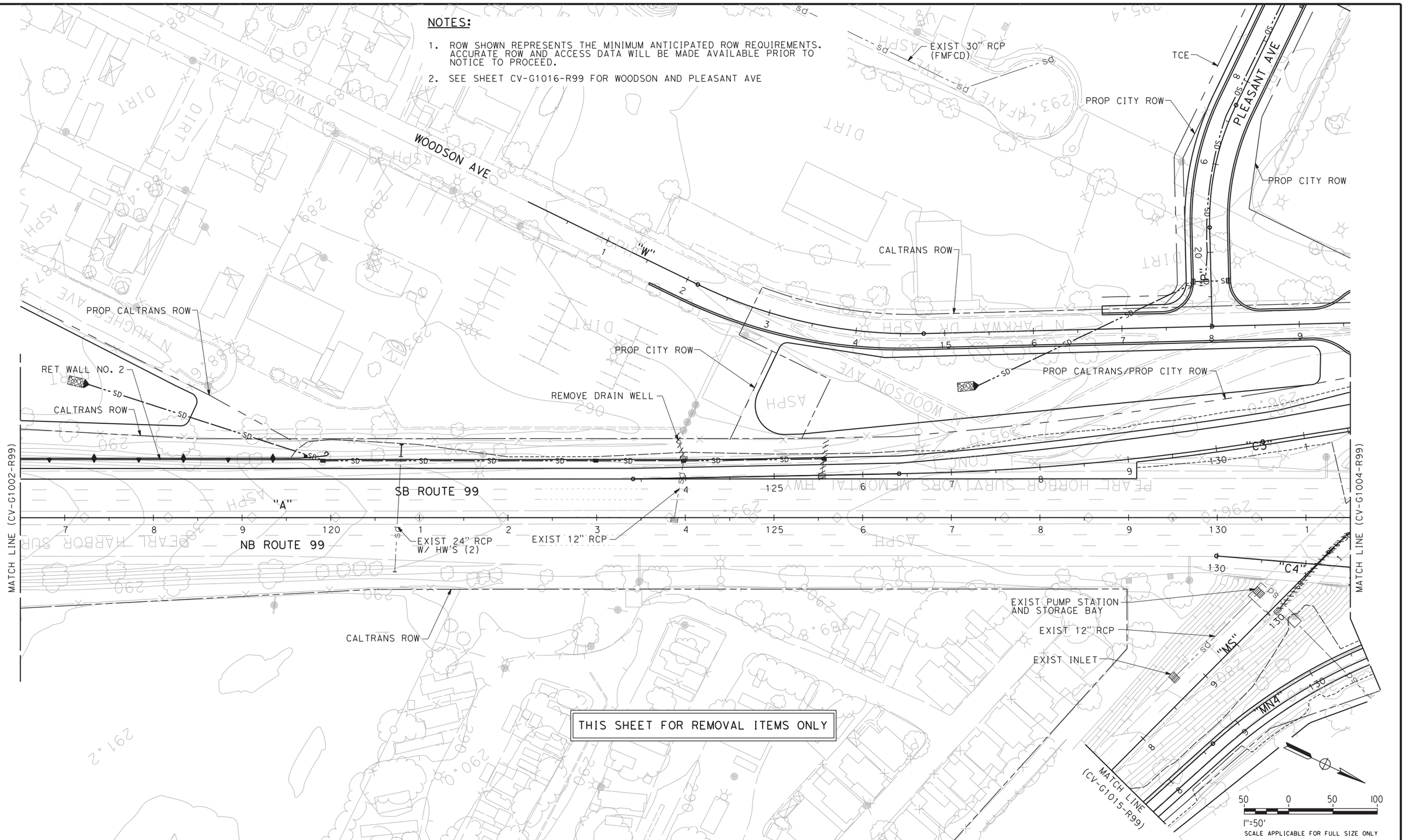

THIS SHEET FOR REMOVAL ITEMS ONLY

REV	DATE	BY	CHK	APP	DESCRIPTION

DESIGNED BY I. MATAGI
DRAWN BY J. TYLER
CHECKED BY R. HENDERSON
IN CHARGE F. NOBARI
DATE 2/17/12

PROPOSED PRELIMINARY DESIGN

NOT FOR CONSTRUCTION

AECOM Technical Services, Inc.
2020 L Street, Suite 300
Sacramento, CA 95811

CH2MHILL

CALIFORNIA HIGH-SPEED RAIL AUTHORITY

CALIFORNIA HIGH-SPEED TRAIN PROJECT
SIERRA SUBDIVISION
PACKAGE 1A
ROADWAY
GRADING AND DRAINAGE PLAN
SR 99 RE-ALIGNMENT

CONTRACT NO.
DRAWING NO. CV-G1003-R99
SCALE AS SHOWN
SHEET NO.

ychiu 2/16/2012 5:43:28 PM

NOTES:

1. ROW SHOWN REPRESENTS THE MINIMUM ANTICIPATED ROW REQUIREMENTS. ACCURATE ROW AND ACCESS DATA WILL BE MADE AVAILABLE PRIOR TO NOTICE TO PROCEED.
2. SEE SHEET CV-G1016-R99 FOR WOODSON AND PLEASANT AVE.

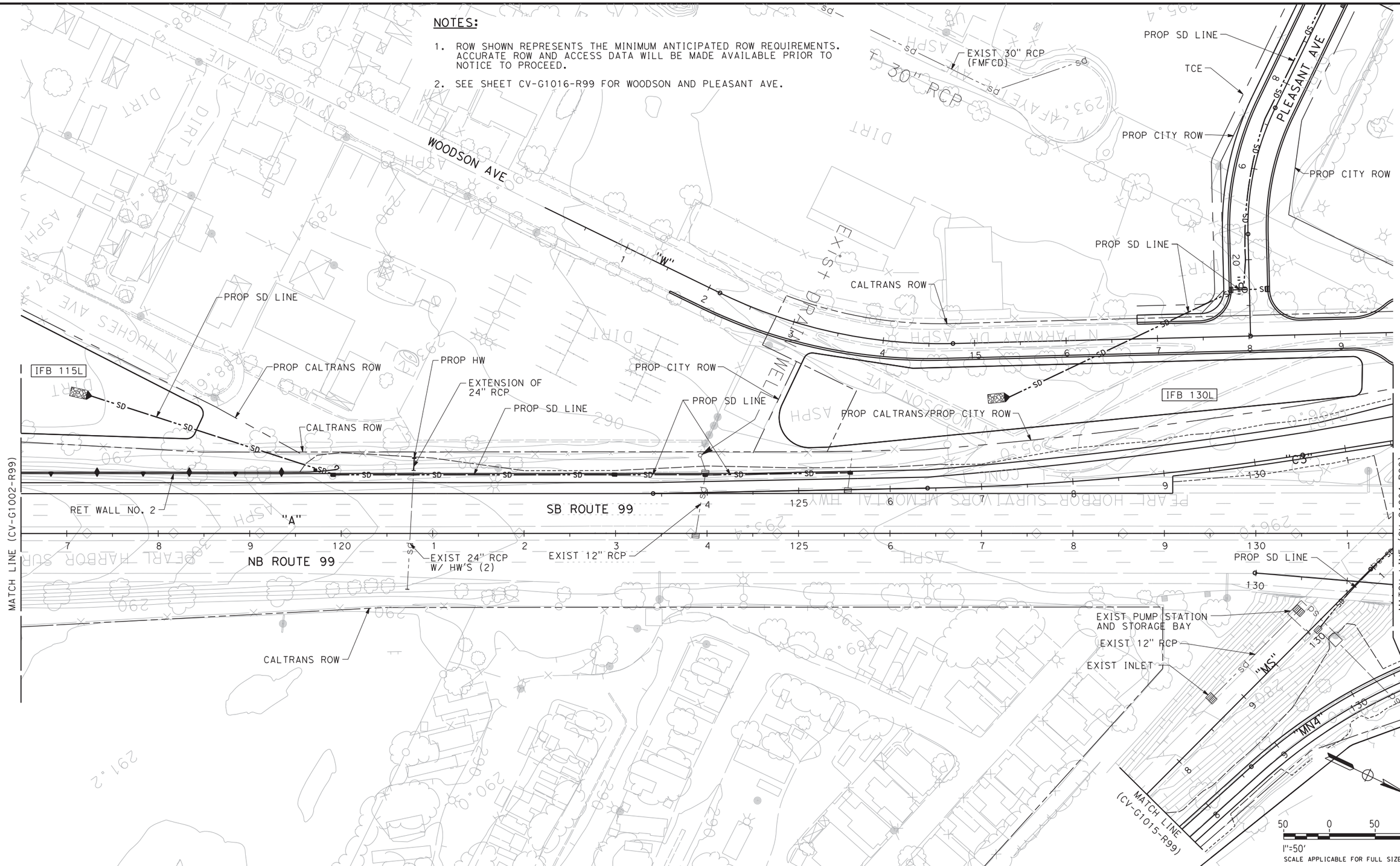

REV	DATE	BY	CHK	APP	DESCRIPTION

DESIGNED BY I. MATAGI
DRAWN BY J. TYLER
CHECKED BY R. HENDERSON
IN CHARGE F. NOBARI
DATE 2/17/12

PROPOSED PRELIMINARY DESIGN

NOT FOR CONSTRUCTION

AECOM Technical Services, Inc.
2020 L Street, Suite 300
Sacramento, CA 95811
CH2MHILL

CALIFORNIA HIGH-SPEED RAIL AUTHORITY

CALIFORNIA HIGH-SPEED TRAIN PROJECT
SIERRA SUBDIVISION
PACKAGE 1A
ROADWAY
GRADING AND DRAINAGE PLAN
SR 99 RE-ALIGNMENT

CONTRACT NO.
DRAWING NO. CV-G1003A-R99
SCALE AS SHOWN
SHEET NO.

ychiu 2/16/2012 5:42:04 PM CAHSRP-R1.TBL CHSR_half_black.plt C:\Documents and Settings\ychiu\My Documents\NDMProj\356751 - California High Speed Rail - SR99 Improvements\15-CV-G1003A-R99_OPTIO

NOTES:

1. ROW SHOWN REPRESENTS THE MINIMUM ANTICIPATED ROW REQUIREMENTS. ACCURATE ROW AND ACCESS DATA WILL BE MADE AVAILABLE PRIOR TO NOTICE TO PROCEED.
2. SEE SHEETS CV-G1012-R99 AND CV-G1013-R99 FOR CLINTON AVE.

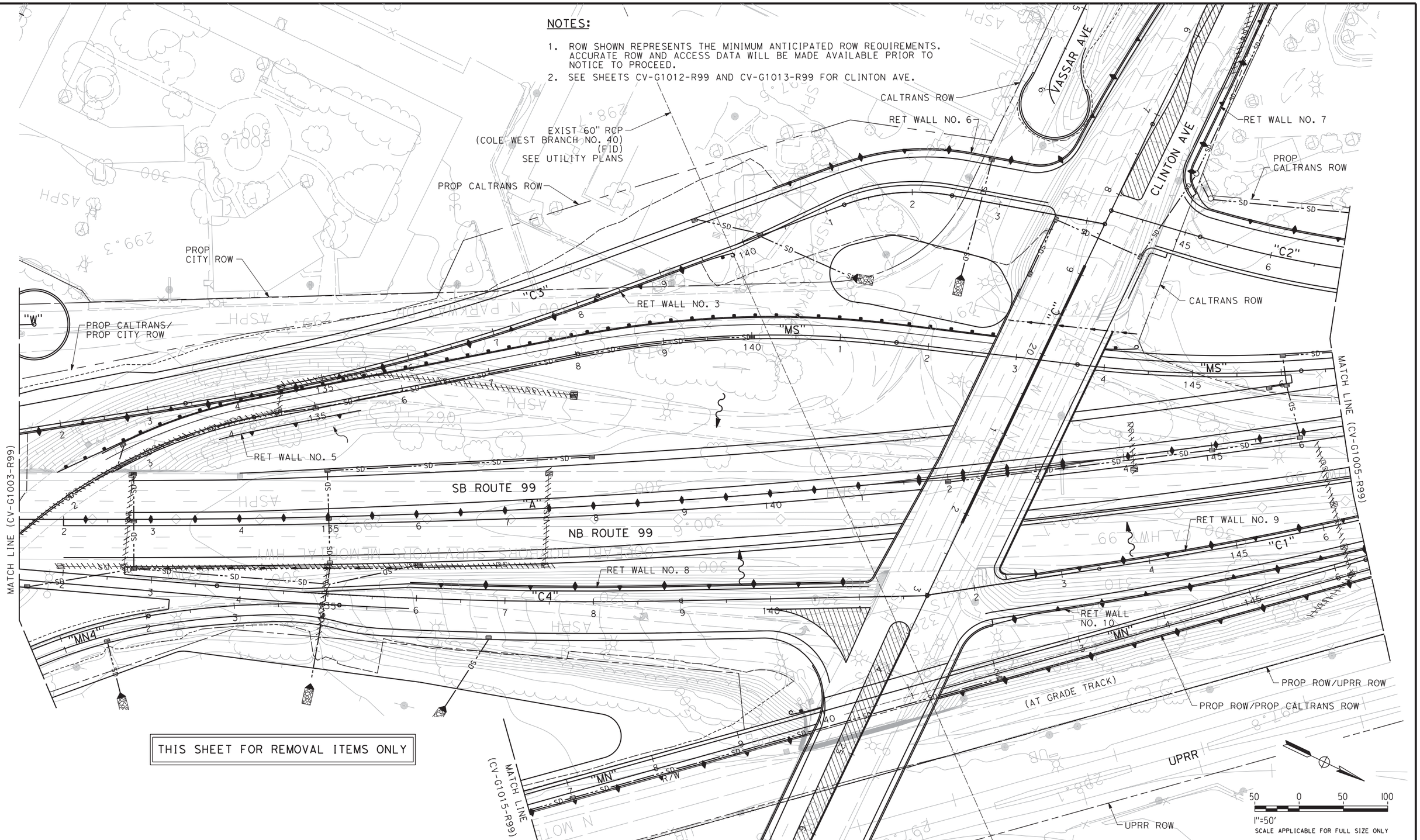

THIS SHEET FOR REMOVAL ITEMS ONLY

REV	DATE	BY	CHK	APP	DESCRIPTION

DESIGNED BY I. MATAGI
DRAWN BY J. TYLER
CHECKED BY R. HENDERSON
IN CHARGE F. NOBARI
DATE 2/17/12

PROPOSED PRELIMINARY DESIGN

NOT FOR CONSTRUCTION

AECOM Technical Services, Inc.
2020 L Street, Suite 300
Sacramento, CA 95811
CH2MHILL

CALIFORNIA HIGH-SPEED RAIL AUTHORITY

CALIFORNIA HIGH-SPEED TRAIN PROJECT
SIERRA SUBDIVISION
PACKAGE 1A
ROADWAY
GRADING AND DRAINAGE PLAN
SR 99 RE-ALIGNMENT

CONTRACT NO.
DRAWING NO. CV-G1004-R99
SCALE AS SHOWN
SHEET NO.

ychiu 2/16/2012 5:47:56 PM CAHSRP-R1.TBL CHSR_half_black.plt C:\Documents and Settings\ychiu\My Documents\NDMProj\356751 - California High Speed Rail - SR99 Improvements\15-CV-G1004-R99_OPTION
2/16/2012 5:47:57 PM

NOTES:

1. ROW SHOWN REPRESENTS THE MINIMUM ANTICIPATED ROW REQUIREMENTS. ACCURATE ROW AND ACCESS DATA WILL BE MADE AVAILABLE PRIOR TO NOTICE TO PROCEED.
2. SEE SHEETS CV-G1012-R99 AND CV-G1013-R99 FOR CLINTON AVE.

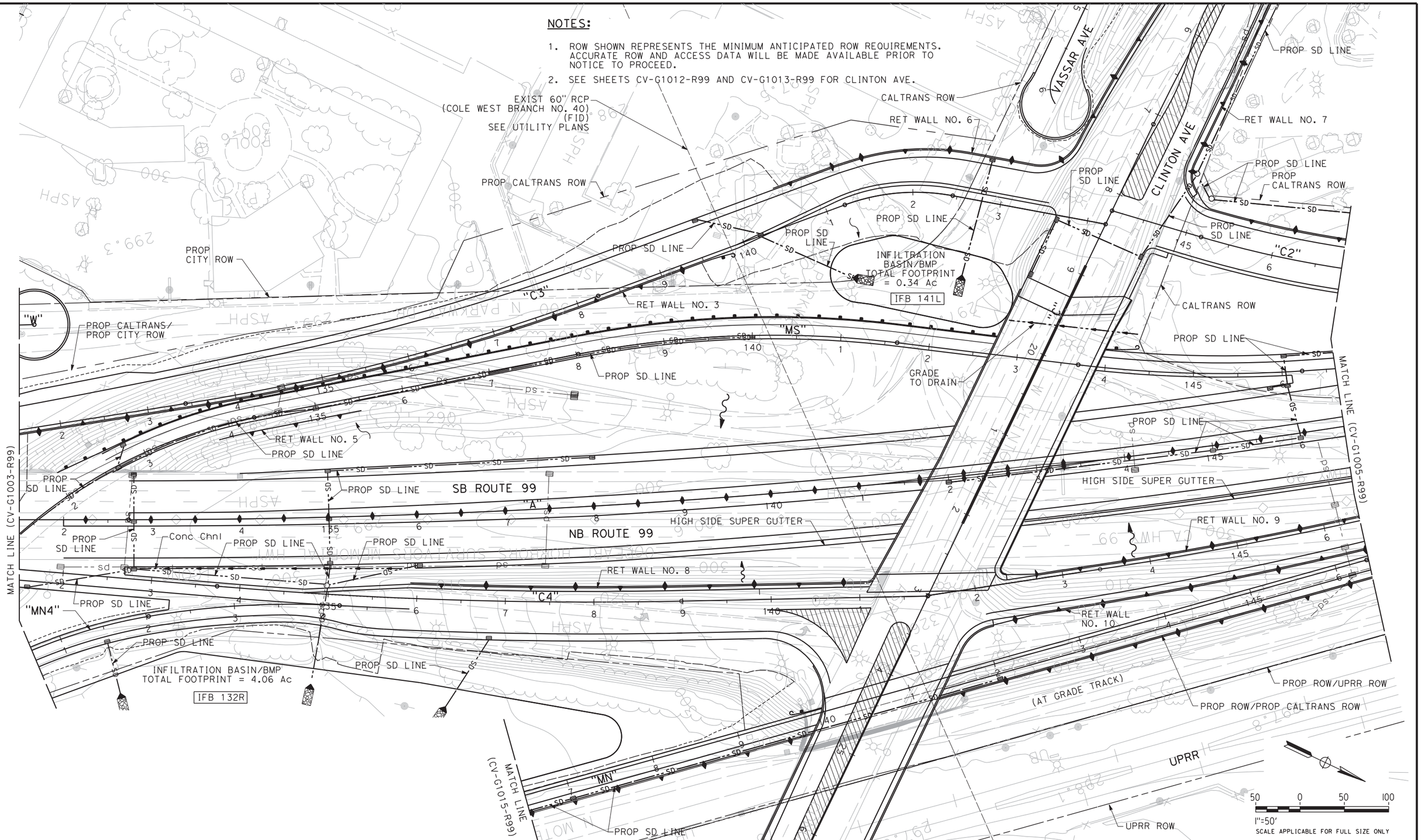

REV	DATE	BY	CHK	APP	DESCRIPTION

DESIGNED BY I. MATAGI
DRAWN BY J. TYLER
CHECKED BY R. HENDERSON
IN CHARGE F. NOBARI
DATE 2/17/12

PROPOSED PRELIMINARY DESIGN

NOT FOR CONSTRUCTION

AECOM Technical Services, Inc.
2020 L Street, Suite 300
Sacramento, CA 95811
CH2MHILL

CALIFORNIA HIGH-SPEED RAIL AUTHORITY

CALIFORNIA HIGH-SPEED TRAIN PROJECT
SIERRA SUBDIVISION
PACKAGE 1A
ROADWAY
GRADING AND DRAINAGE PLAN
SR 99 RE-ALIGNMENT

CONTRACT NO.
DRAWING NO. CV-G1004A-R99
SCALE AS SHOWN
SHEET NO.

2/16/2012 5:44:27 PM CAHSRP-R1.TBL CHSR_half_black.plt C:\Documents and Settings\ychiu\My Documents\NDMProj\356751 - California High Speed Rail - SR99 Improvements\15-CV-G1004A-R99_OPTIO ychiu
2/16/2012 5:44:28 PM

NOTE:

1. ROW SHOWN REPRESENTS THE MINIMUM ANTICIPATED ROW REQUIREMENTS. ACCURATE ROW AND ACCESS DATA WILL BE MADE AVAILABLE PRIOR TO NOTICE TO PROCEED.

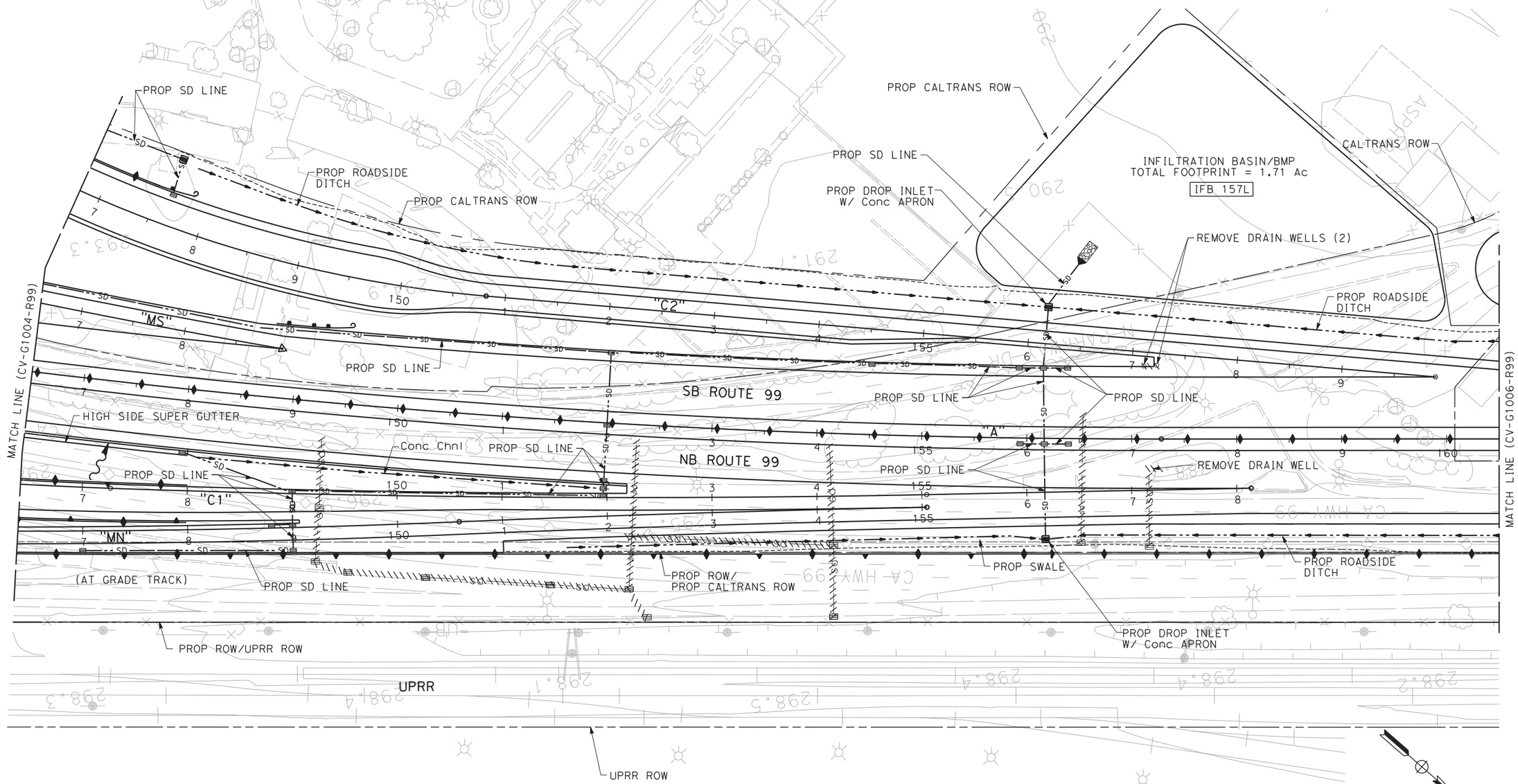

REV	DATE	BY	CHK	APP	DESCRIPTION

DESIGNED BY I. MATAGI
DRAWN BY J. TYLER
CHECKED BY R. HENDERSON
IN CHARGE F. NOBARI
DATE 2/17/12

PROPOSED PRELIMINARY DESIGN

NOT FOR CONSTRUCTION

AECOM Technical Services, Inc.
2020 L Street, Suite 300
Sacramento, CA 95811

CH2MHILL

CALIFORNIA HIGH-SPEED RAIL AUTHORITY

CALIFORNIA HIGH-SPEED TRAIN PROJECT
SIERRA SUBDIVISION
PACKAGE 1A
ROADWAY
GRADING AND DRAINAGE PLAN
SR 99 RE-ALIGNMENT

CONTRACT NO.
DRAWING NO. CV-G1005-R99
SCALE AS SHOWN
SHEET NO.

ychiu 2/16/2012 5:51:27 PM CAHSRP-R1.TBL CHSR_half_black.plt C:\Documents and Settings\ychiu\My Documents\NDMProj\356751 - California High Speed Rail - SR99 Improvements\15-CV-G1005-R99_OPTION
2/16/2012 5:51:28 PM

imatagi 12/2/2011 11:45:26 AM CAHSRP-r1.tbl CHSR_half_black.plt C:\Users\imatagi\Documents\NDMProj\356751 - California High Speed Rail - SR99 Improvements\1S-CV-G1006-R99.dgn

NOTE:

1. ROW SHOWN REPRESENTS THE MINIMUM ANTICIPATED ROW REQUIREMENTS. ACCURATE ROW AND ACCESS DATA WILL BE MADE AVAILABLE PRIOR TO NOTICE TO PROCEED.

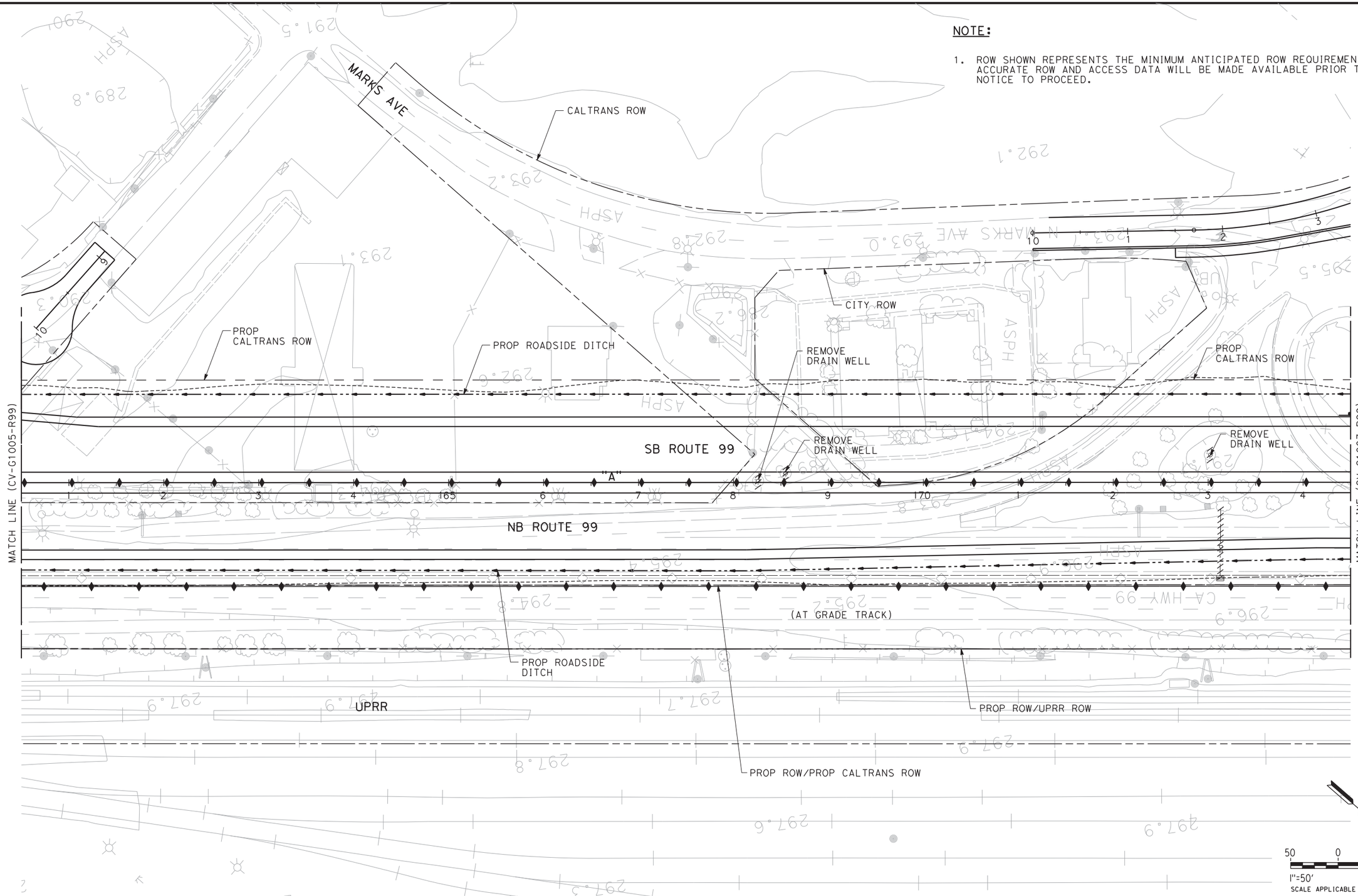

REV	DATE	BY	CHK	APP	DESCRIPTION

DESIGNED BY I. MATAGI
DRAWN BY J. TYLER
CHECKED BY R. HENDERSON
IN CHARGE F. NOBARI
DATE 12/08/11

PROPOSED PRELIMINARY DESIGN

NOT FOR CONSTRUCTION

AECOM Technical Services, Inc.
2020 L Street, Suite 300
Sacramento, CA 95811
CH2MHILL

CALIFORNIA HIGH-SPEED RAIL AUTHORITY

CALIFORNIA HIGH-SPEED TRAIN PROJECT
SIERRA SUBDIVISION
PACKAGE 1A
ROADWAY
GRADING AND DRAINAGE PLAN
SR 99 RE-ALIGNMENT

CONTRACT NO.
DRAWING NO. CV-G1006-R99
SCALE AS SHOWN
SHEET NO.

12/2/2011 11:45:27 AM

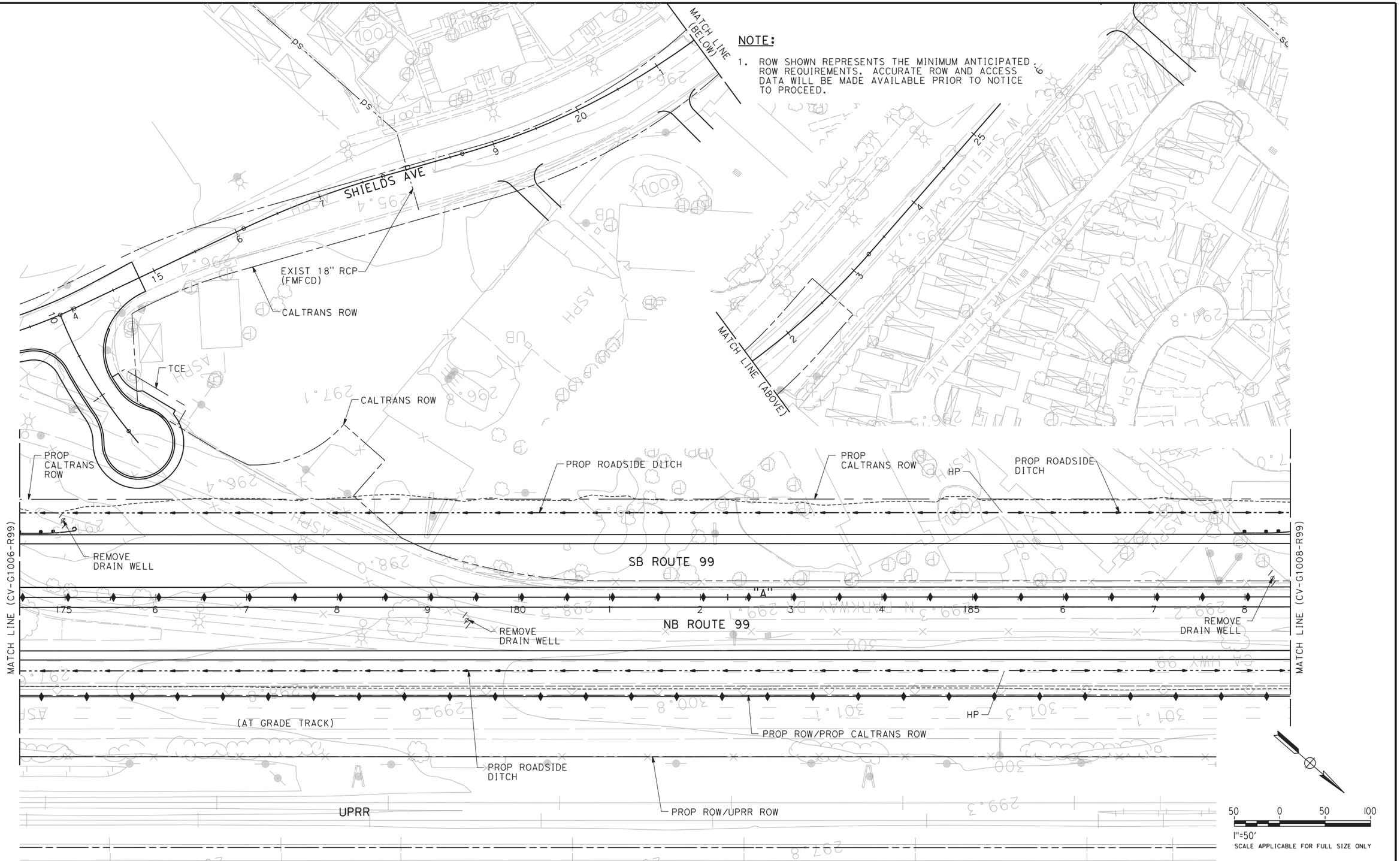

NOTE:

1. ROW SHOWN REPRESENTS THE MINIMUM ANTICIPATED ROW REQUIREMENTS. ACCURATE ROW AND ACCESS DATA WILL BE MADE AVAILABLE PRIOR TO NOTICE TO PROCEED.

REV	DATE	BY	CHK	APP	DESCRIPTION

DESIGNED BY I. MATAGI
DRAWN BY J. TYLER
CHECKED BY R. HENDERSON
IN CHARGE F. NOBARI
DATE 12/08/11

PROPOSED PRELIMINARY DESIGN

NOT FOR CONSTRUCTION

AECOM Technical Services, Inc.
2020 L Street, Suite 300
Sacramento, CA 95811

CH2MHILL

CALIFORNIA HIGH-SPEED RAIL AUTHORITY

CALIFORNIA HIGH-SPEED TRAIN PROJECT
SIERRA SUBDIVISION
PACKAGE 1A
ROADWAY
GRADING AND DRAINAGE PLAN
SR 99 RE-ALIGNMENT

CONTRACT NO.
DRAWING NO. CV-G1007-R99
SCALE AS SHOWN
SHEET NO.

imatagi 12/2/2011 11:46:19 AM CAHSRP-r1.tbl CHSR_half_black.plt+ C:\Users\imatagi\Documents\NDMProj\356751 - California High Speed Rail - SR99 Improvements\1S-CV-G1007-R99.dgn 12/2/2011 11:46:19 AM

NOTE:

1. ROW SHOWN REPRESENTS THE MINIMUM ANTICIPATED ROW REQUIREMENTS. ACCURATE ROW AND ACCESS DATA WILL BE MADE AVAILABLE PRIOR TO NOTICE TO PROCEED.

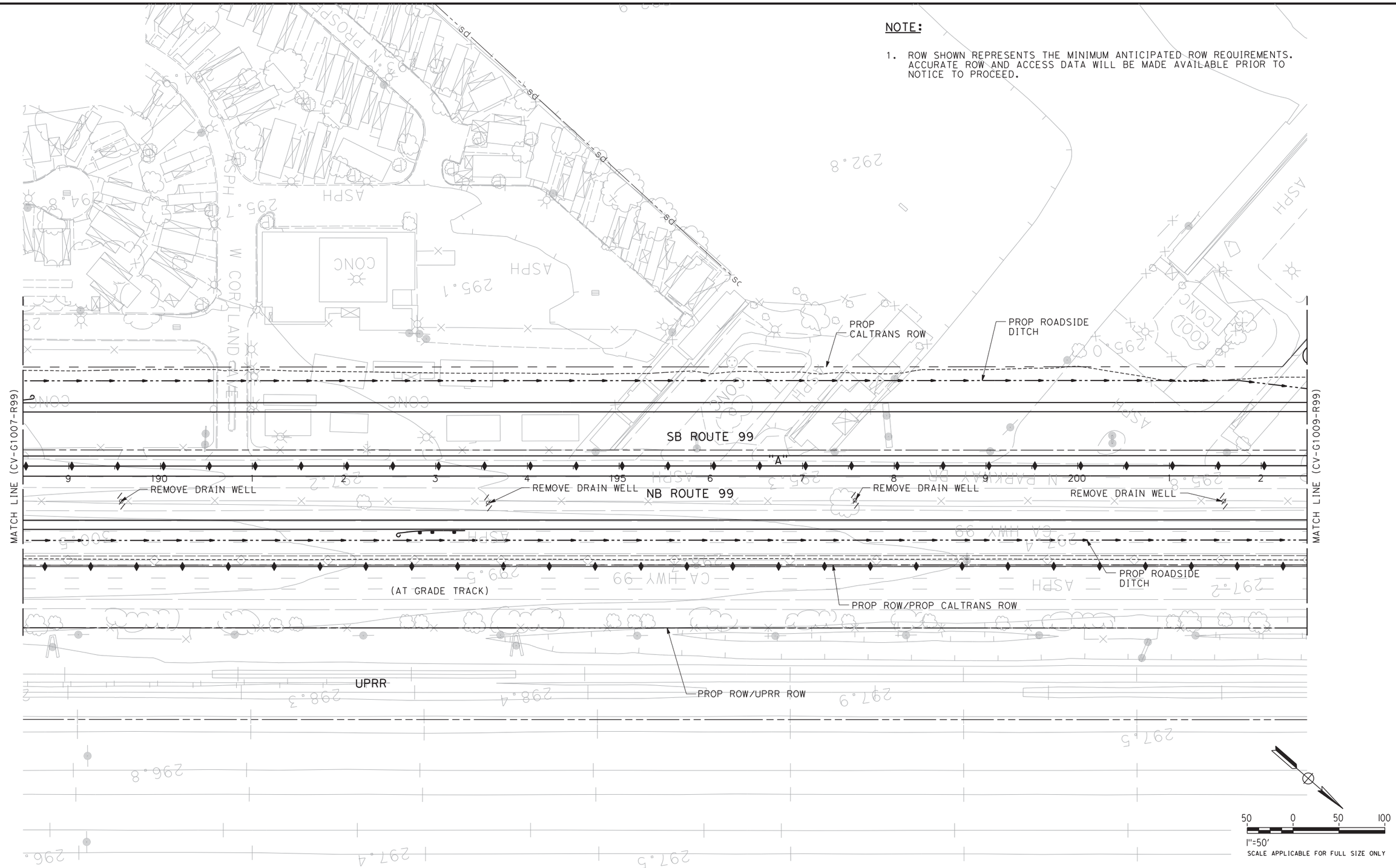

REV	DATE	BY	CHK	APP	DESCRIPTION

DESIGNED BY I. MATAGI
DRAWN BY J. TYLER
CHECKED BY R. HENDERSON
IN CHARGE F. NOBARI
DATE 12/08/11

PROPOSED PRELIMINARY DESIGN

NOT FOR CONSTRUCTION

AECOM Technical Services, Inc.
2020 L Street, Suite 300
Sacramento, CA 95811

CH2MHILL

CALIFORNIA HIGH-SPEED RAIL AUTHORITY

CALIFORNIA HIGH-SPEED TRAIN PROJECT
SIERRA SUBDIVISION
PACKAGE 1A
ROADWAY
GRADING AND DRAINAGE PLAN
SR 99 RE-ALIGNMENT

CONTRACT NO.
DRAWING NO. CV-G1008-R99
SCALE AS SHOWN
SHEET NO.

imatagi 12/2/2011 11:47:12 AM CAHSRP-r1.tbl CHSR_half_black.plt C:\Users\imatagi\Documents\NDMProj\356751 - California High Speed Rail - SR99 Improvements\1S-CV-G1008-R99.dgn

NOTE:

1. ROW SHOWN REPRESENTS THE MINIMUM ANTICIPATED ROW REQUIREMENTS. ACCURATE ROW AND ACCESS DATA WILL BE MADE AVAILABLE PRIOR TO NOTICE TO PROCEED.

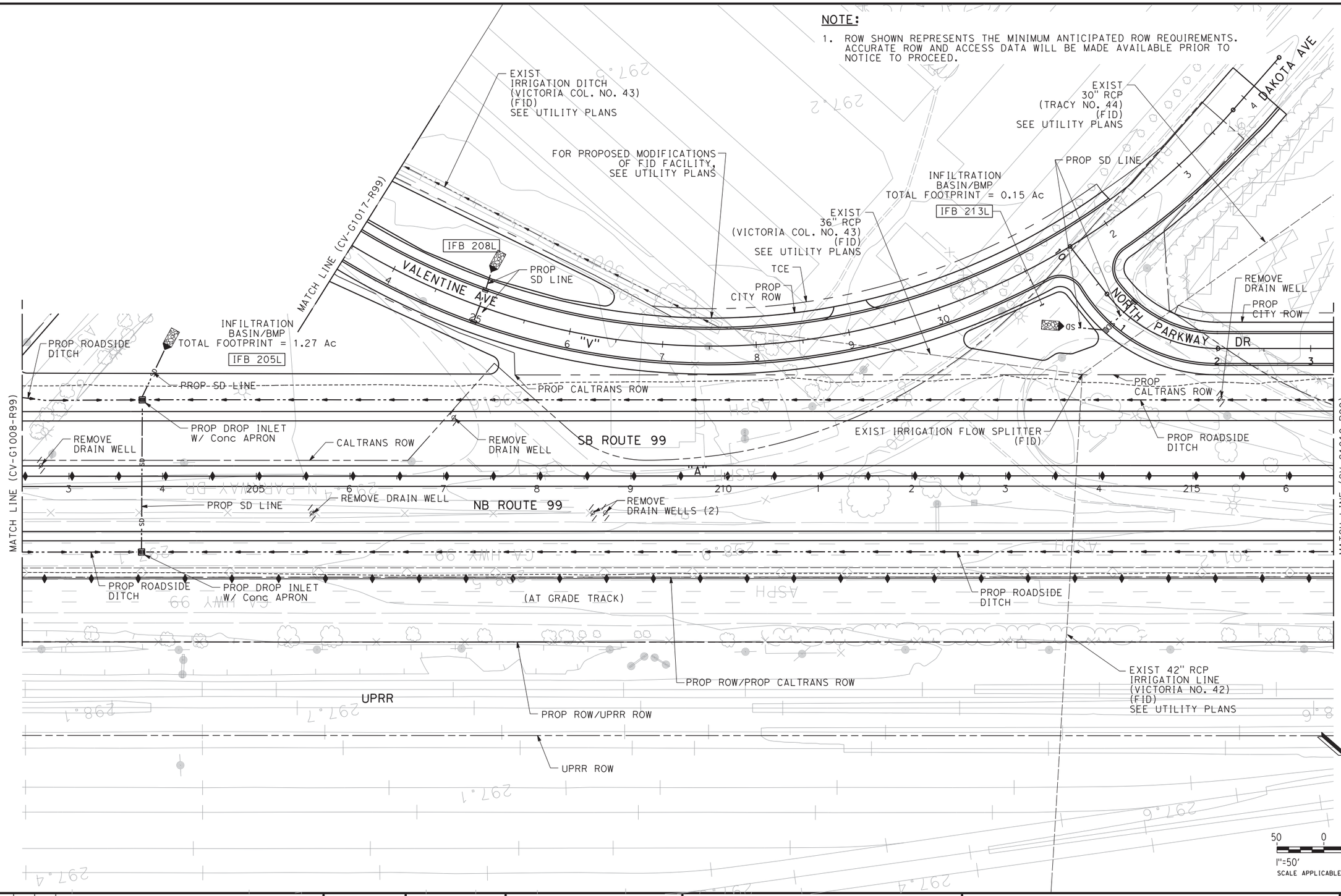

REV	DATE	BY	CHK	APP	DESCRIPTION

DESIGNED BY I. MATAGI
DRAWN BY J. TYLER
CHECKED BY R. HENDERSON
IN CHARGE F. NOBARI
DATE 12/08/11

PROPOSED PRELIMINARY DESIGN

NOT FOR CONSTRUCTION

AECOM Technical Services, Inc.
2020 L Street, Suite 300
Sacramento, CA 95811
CH2MHILL

CALIFORNIA HIGH-SPEED RAIL AUTHORITY

CALIFORNIA HIGH-SPEED TRAIN PROJECT
SIERRA SUBDIVISION
PACKAGE 1A
ROADWAY
GRADING AND DRAINAGE PLAN
SR 99 RE-ALIGNMENT

CONTRACT NO.
DRAWING NO. CV-G1009-R99
SCALE AS SHOWN
SHEET NO.

imatagi 12/2/2011 11:48:28 AM CAHSRP-r1.tbl CHSR_half_black.plt C:\Users\imatagi\Documents\NDMProj\356751 - California High Speed Rail - SR99 Improvements\1S-CV-G1009-R99.dgn
12/2/2011 11:48:28 AM

NOTE:

1. ROW SHOWN REPRESENTS THE MINIMUM ANTICIPATED ROW REQUIREMENTS. ACCURATE ROW AND ACCESS DATA WILL BE MADE AVAILABLE PRIOR TO NOTICE TO PROCEED.

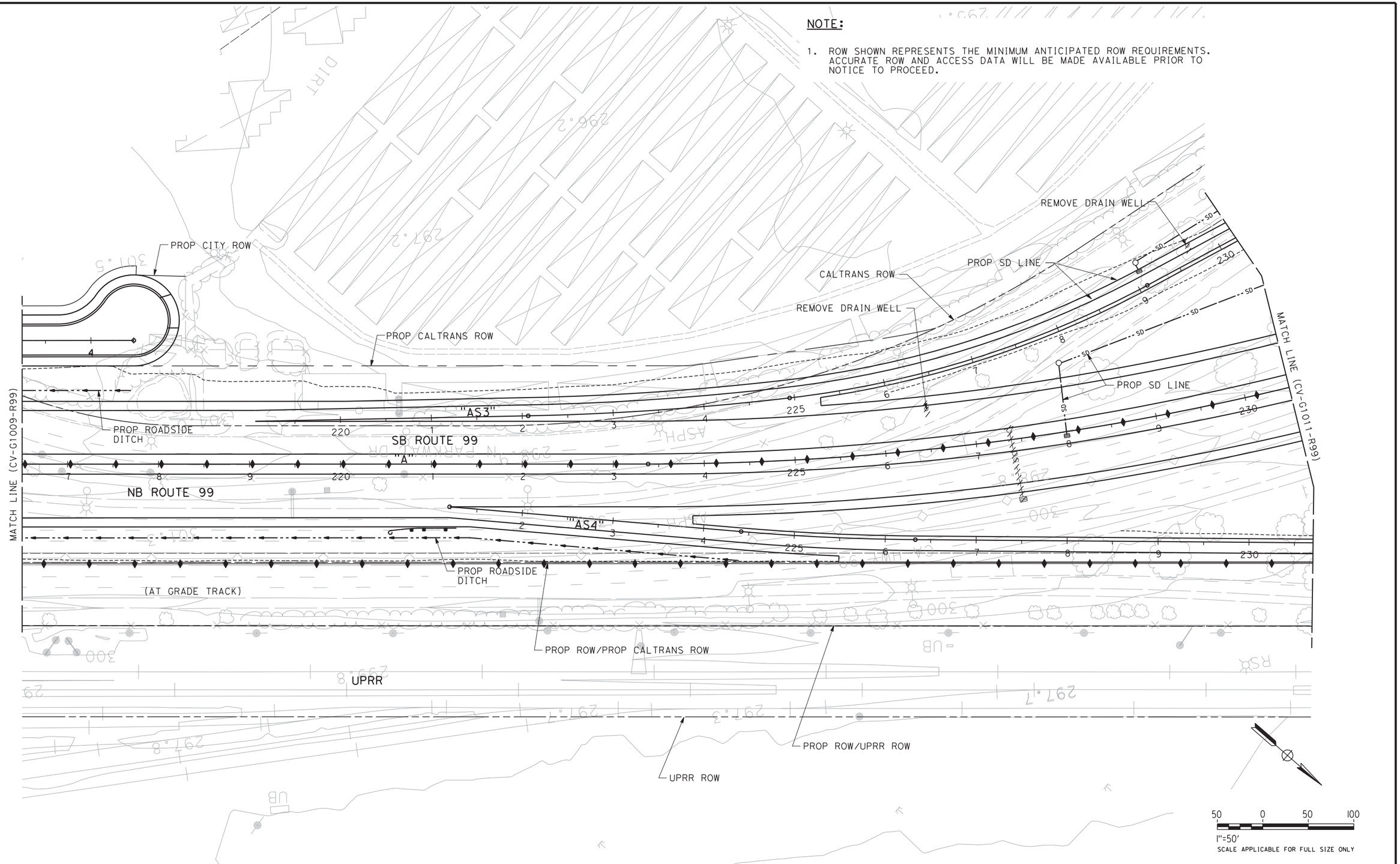

REV	DATE	BY	CHK	APP	DESCRIPTION

DESIGNED BY I. MATAGI
DRAWN BY J. TYLER
CHECKED BY R. HENDERSON
IN CHARGE F. NOBARI
DATE 2/17/12

PROPOSED PRELIMINARY DESIGN

NOT FOR CONSTRUCTION

AECOM Technical Services, Inc.
2020 L Street, Suite 300
Sacramento, CA 95811
CH2MHILL

CALIFORNIA HIGH-SPEED RAIL AUTHORITY

CALIFORNIA HIGH-SPEED TRAIN PROJECT
SIERRA SUBDIVISION
PACKAGE 1A
ROADWAY
GRADING AND DRAINAGE PLAN
SR 99 RE-ALIGNMENT

CONTRACT NO.
DRAWING NO. CV-G1010-R99
SCALE AS SHOWN
SHEET NO.

ychiu 2/16/2012 5:52:13 PM CAHSRP-R1.TBL CHSR_half_black.plt C:\Documents and Settings\ychiu\My Documents\NDMProj\356751 - California High Speed Rail - SR99 Improvements\1S-CV-G1010-R99_OPTION

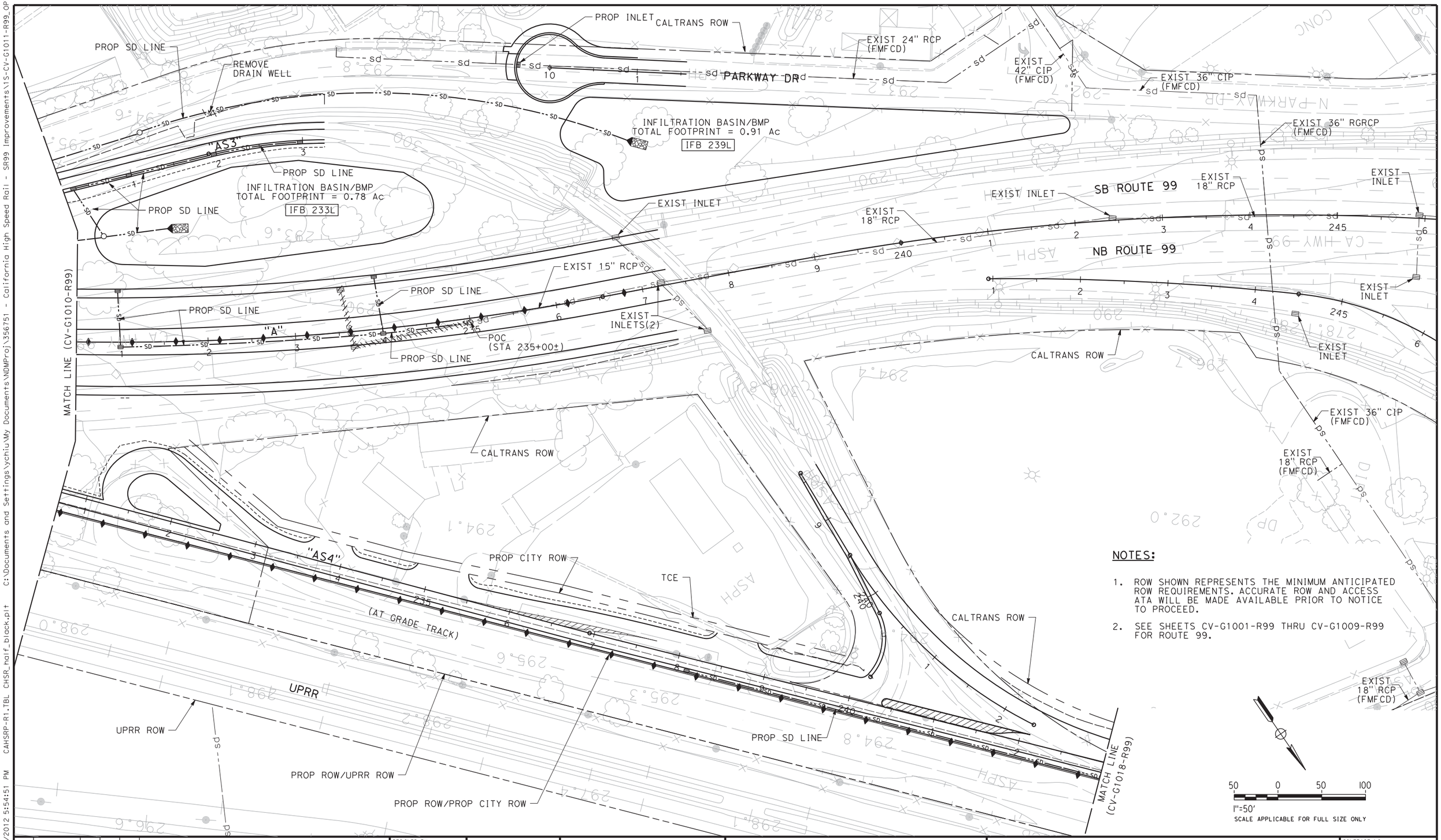

NOTES:

1. ROW SHOWN REPRESENTS THE MINIMUM ANTICIPATED ROW REQUIREMENTS. ACCURATE ROW AND ACCESS ATA WILL BE MADE AVAILABLE PRIOR TO NOTICE TO PROCEED.
2. SEE SHEETS CV-G1001-R99 THRU CV-G1009-R99 FOR ROUTE 99.

REV	DATE	BY	CHK	APP	DESCRIPTION

DESIGNED BY I. MATAGI
DRAWN BY J. TYLER
CHECKED BY R. HENDERSON
IN CHARGE F. NOBARI
DATE 2/17/12

PROPOSED PRELIMINARY DESIGN

NOT FOR CONSTRUCTION

AECOM Technical Services, Inc.
2020 L Street, Suite 300
Sacramento, CA 95811

CH2MHILL

CALIFORNIA HIGH-SPEED RAIL AUTHORITY

CALIFORNIA HIGH-SPEED TRAIN PROJECT
SIERRA SUBDIVISION
PACKAGE 1A
ROADWAY
GRADING AND DRAINAGE PLAN
SR 99 RE-ALIGNMENT

CONTRACT NO.
DRAWING NO. CV-G1011-R99
SCALE AS SHOWN
SHEET NO.

2/16/2012 5:54:51 PM CAHSRP-R1.TBL CHSR_half_black.plt C:\Documents and Settings\ychiu\My Documents\NDMProj\356751 - California High Speed Rail - SR99 Improvements\15-CV-G1011-R99_OPTION
ychiu
2/16/2012 5:54:52 PM

NOTES:

1. ROW SHOWN REPRESENTS THE MINIMUM ANTICIPATED ROW REQUIREMENTS. ACCURATE ROW AND ACCESS ATA WILL BE MADE AVAILABLE PRIOR TO NOTICE TO PROCEED.
2. SEE SHEETS CV-G1001-R99 THRU CV-G1009-R99 FOR ROUTE 99.

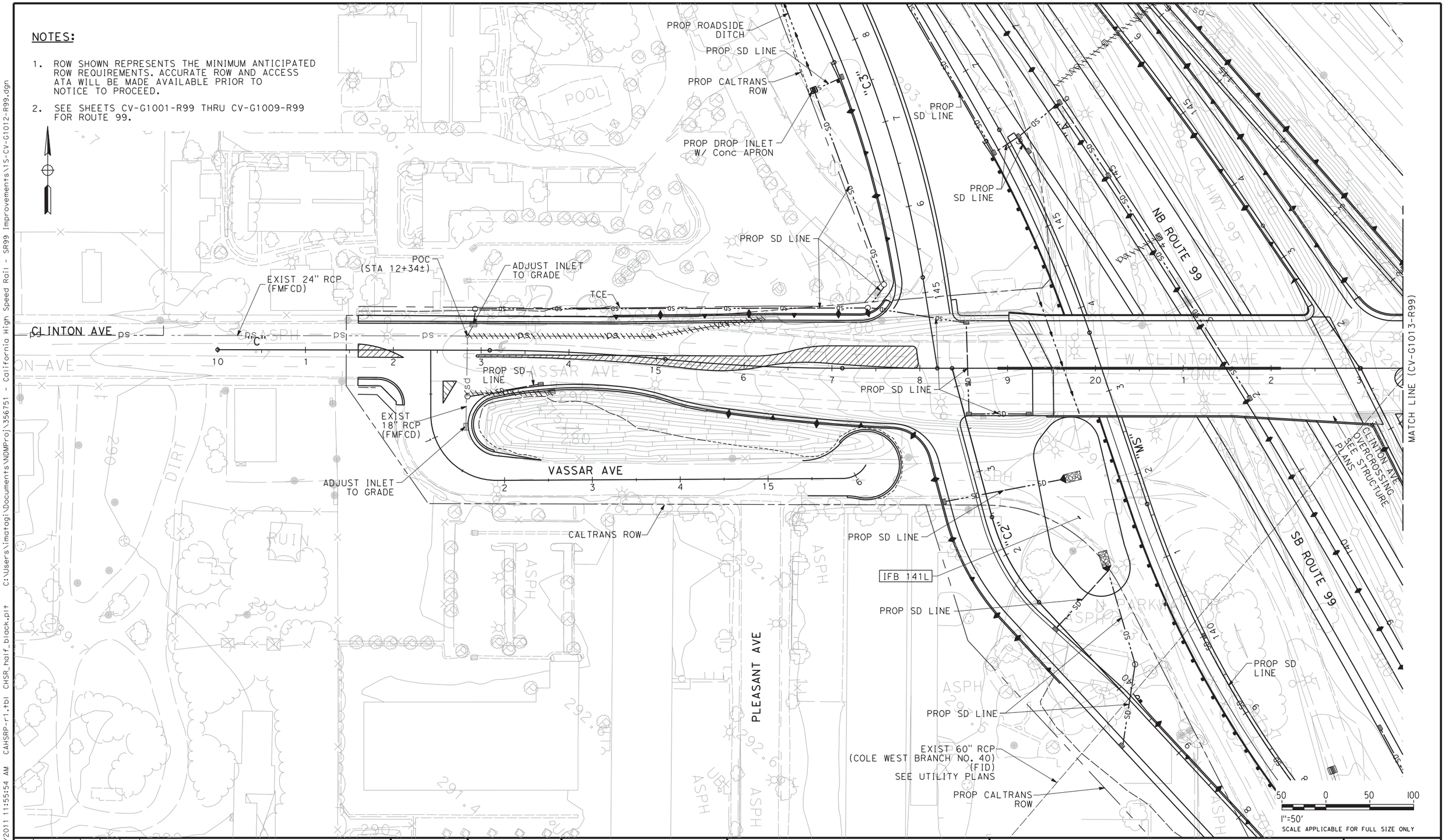

REV	DATE	BY	CHK	APP	DESCRIPTION

DESIGNED BY I. MATAGI
DRAWN BY J. TYLER
CHECKED BY R. HENDERSON
IN CHARGE F. NOBARI
DATE 12/08/11

PROPOSED PRELIMINARY DESIGN

NOT FOR CONSTRUCTION

AECOM Technical Services, Inc.
2020 L Street, Suite 300
Sacramento, CA 95811
CH2MHILL

CALIFORNIA HIGH-SPEED RAIL AUTHORITY

CALIFORNIA HIGH-SPEED TRAIN PROJECT
SIERRA SUBDIVISION
PACKAGE 1A
ROADWAY
GRADING AND DRAINAGE PLAN
SR 99 RE-ALIGNMENT

CONTRACT NO.
DRAWING NO. CV-G1012-R99
SCALE AS SHOWN
SHEET NO.

imatagi 12/2/2011 11:55:54 AM CAHSRP-r1.tbl CHSR_half_black.plt C:\Users\imatagi\Documents\NDMProj\356751 - California High Speed Rail - SR99 Improvements\1S-CV-G1012-R99.dgn 12/2/2011 11:55:55 AM

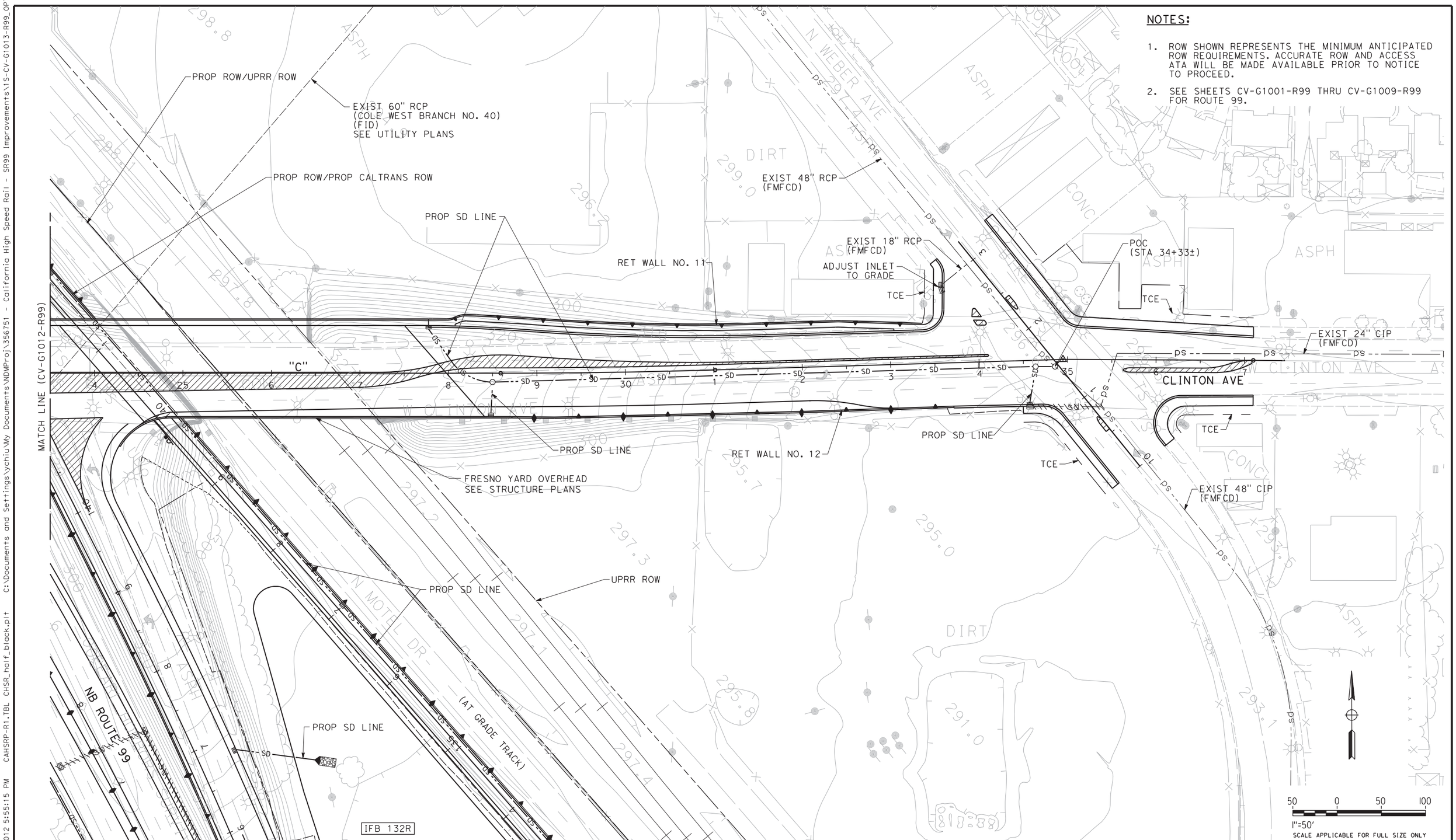

NOTES:

1. ROW SHOWN REPRESENTS THE MINIMUM ANTICIPATED ROW REQUIREMENTS. ACCURATE ROW AND ACCESS ATA WILL BE MADE AVAILABLE PRIOR TO NOTICE TO PROCEED.
2. SEE SHEETS CV-G1001-R99 THRU CV-G1009-R99 FOR ROUTE 99.

REV	DATE	BY	CHK	APP	DESCRIPTION

DESIGNED BY I. MATAGI
DRAWN BY J. TYLER
CHECKED BY R. HENDERSON
IN CHARGE F. NOBARI
DATE 2/17/12

PROPOSED PRELIMINARY DESIGN

NOT FOR CONSTRUCTION

AECOM Technical Services, Inc.
2020 L Street, Suite 300
Sacramento, CA 95811
CH2MHILL

CALIFORNIA HIGH-SPEED RAIL AUTHORITY

CALIFORNIA HIGH-SPEED TRAIN PROJECT
SIERRA SUBDIVISION
PACKAGE 1A
ROADWAY
GRADING AND DRAINAGE PLAN
SR 99 RE-ALIGNMENT

CONTRACT NO.
DRAWING NO. CV-G1013-R99
SCALE AS SHOWN
SHEET NO.

2/16/2012 5:55:15 PM CAHSRP-R1.TBL CHSR_half_black.plt C:\Documents and Settings\ychiu\My Documents\NDMProj\356751 - California High Speed Rail - SR99 Improvements\15-CV-G1013-R99_OPTION
2/16/2012 5:55:16 PM
ychiu

NOTE:

1. ROW SHOWN REPRESENTS THE MINIMUM ANTICIPATED ROW REQUIREMENTS. ACCURATE ROW AND ACCESS DATA WILL BE MADE AVAILABLE PRIOR TO NOTICE TO PROCEED.

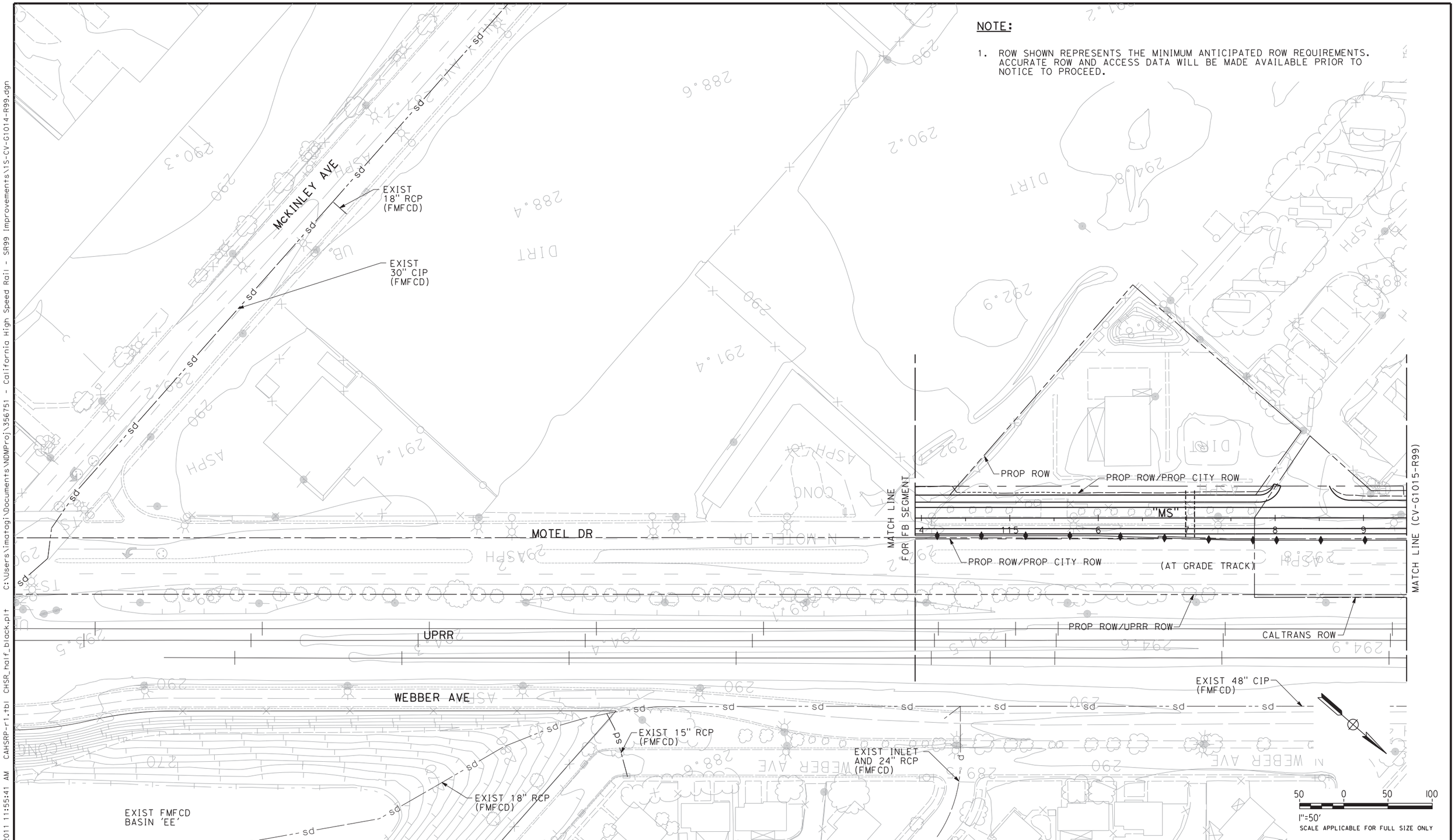

REV	DATE	BY	CHK	APP	DESCRIPTION

DESIGNED BY I. MATAGI
DRAWN BY J. TYLER
CHECKED BY R. HENDERSON
IN CHARGE F. NOBARI
DATE 12/08/11

PROPOSED PRELIMINARY DESIGN

NOT FOR CONSTRUCTION

AECOM Technical Services, Inc.
2020 L Street, Suite 300
Sacramento, CA 95811
CH2MHILL

CALIFORNIA HIGH-SPEED RAIL AUTHORITY

CALIFORNIA HIGH-SPEED TRAIN PROJECT
SIERRA SUBDIVISION
PACKAGE 1A
ROADWAY
GRADING AND DRAINAGE PLAN
SR 99 RE-ALIGNMENT

CONTRACT NO.
DRAWING NO. CV-G1014-R99
SCALE AS SHOWN
SHEET NO.

imatagi 12/2/2011 11:55:41 AM CAHSRP-r1.tbl CHSR_half_black.plt C:\Users\imatagi\Documents\NDMProj\356751 - California High Speed Rail - SR99 Improvements\1S-CV-G1014-R99.dgn 12/2/2011 11:55:41 AM

NOTE:

1. ROW SHOWN REPRESENTS THE MINIMUM ANTICIPATED ROW REQUIREMENTS. ACCURATE ROW AND ACCESS DATA WILL BE MADE AVAILABLE PRIOR TO NOTICE TO PROCEED.

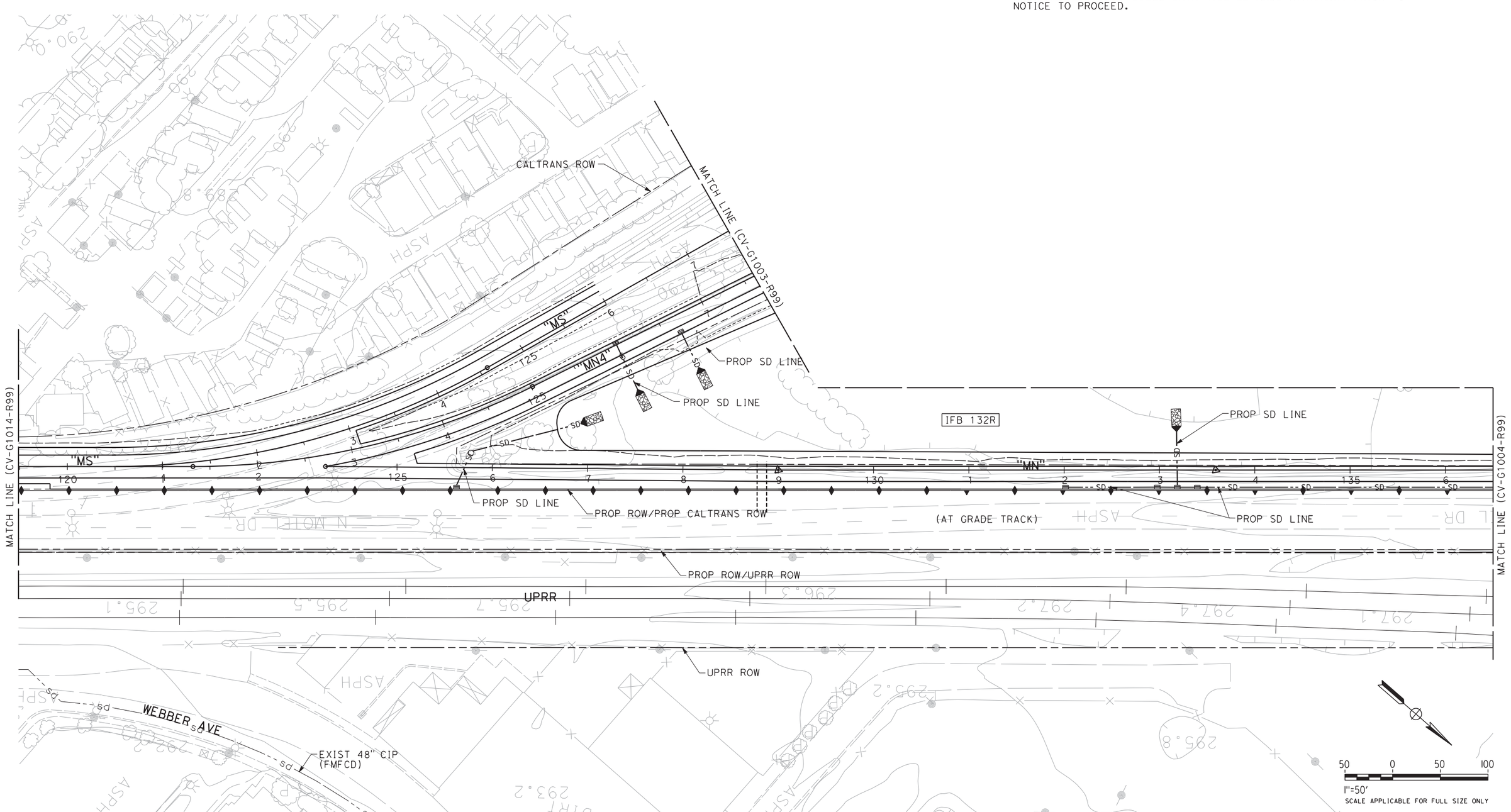

REV	DATE	BY	CHK	APP	DESCRIPTION

DESIGNED BY I. MATAGI
DRAWN BY J. TYLER
CHECKED BY R. HENDERSON
IN CHARGE F. NOBARI
DATE 2/17/12

PROPOSED PRELIMINARY DESIGN

NOT FOR CONSTRUCTION

AECOM Technical Services, Inc.
2020 L Street, Suite 300
Sacramento, CA 95811
CH2MHILL

CALIFORNIA HIGH-SPEED RAIL AUTHORITY

CALIFORNIA HIGH-SPEED TRAIN PROJECT
SIERRA SUBDIVISION
PACKAGE 1A
ROADWAY
GRADING AND DRAINAGE PLAN
SR 99 RE-ALIGNMENT

CONTRACT NO.
DRAWING NO. CV-G1015-R99
SCALE AS SHOWN
SHEET NO.

2/16/2012 5:57:43 PM CAHSRP-R1.TBL CHSR_half_black.plt+ C:\Documents and Settings\ychiu\My Documents\NDMProj\356751 - California High Speed Rail - SR99 Improvements\1S-CV-G1015-R99_OPTION ychiu

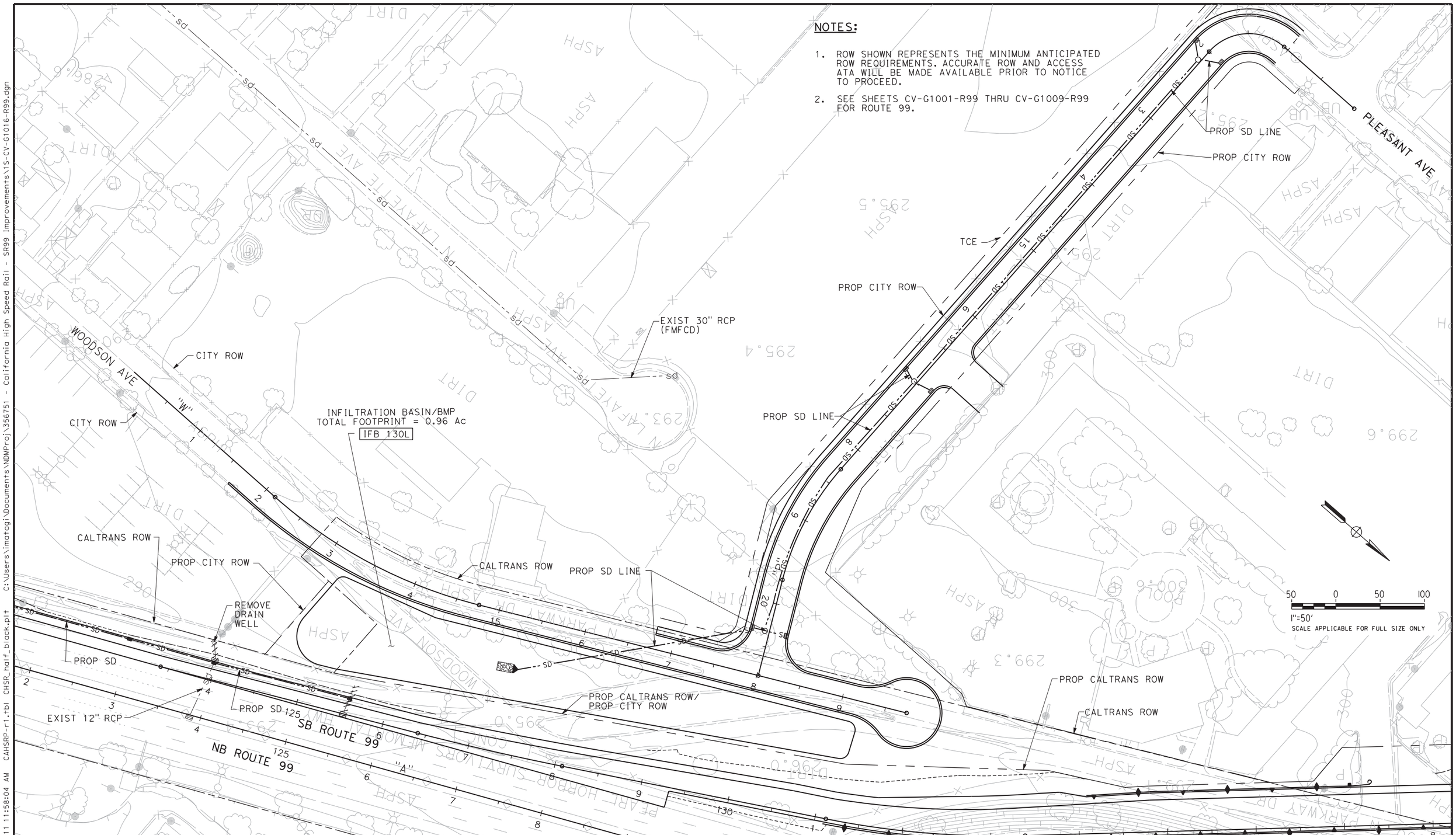

NOTES:

1. ROW SHOWN REPRESENTS THE MINIMUM ANTICIPATED ROW REQUIREMENTS. ACCURATE ROW AND ACCESS ATA WILL BE MADE AVAILABLE PRIOR TO NOTICE TO PROCEED.
2. SEE SHEETS CV-G1001-R99 THRU CV-G1009-R99 FOR ROUTE 99.

REV	DATE	BY	CHK	APP	DESCRIPTION

DESIGNED BY I. MATAGI
DRAWN BY J. TYLER
CHECKED BY R. HENDERSON
IN CHARGE F. NOBARI
DATE 12/08/11

PROPOSED PRELIMINARY DESIGN

NOT FOR CONSTRUCTION

AECOM Technical Services, Inc.
2020 L Street, Suite 300
Sacramento, CA 95811
CH2MHILL

CALIFORNIA HIGH-SPEED RAIL AUTHORITY

CALIFORNIA HIGH-SPEED TRAIN PROJECT
SIERRA SUBDIVISION
PACKAGE 1A
ROADWAY
GRADING AND DRAINAGE PLAN
SR 99 RE-ALIGNMENT

CONTRACT NO.
DRAWING NO. CV-G1016-R99
SCALE AS SHOWN
SHEET NO.

imatagi 12/2/2011 11:58:04 AM CAHSRP-r1.tbl CHSR_half_black.plt C:\Users\imatagi\Documents\NDMProj\356751 - California High Speed Rail - SR99 Improvements\1S-CV-G1016-R99.dgn 12/2/2011 11:58:04 AM

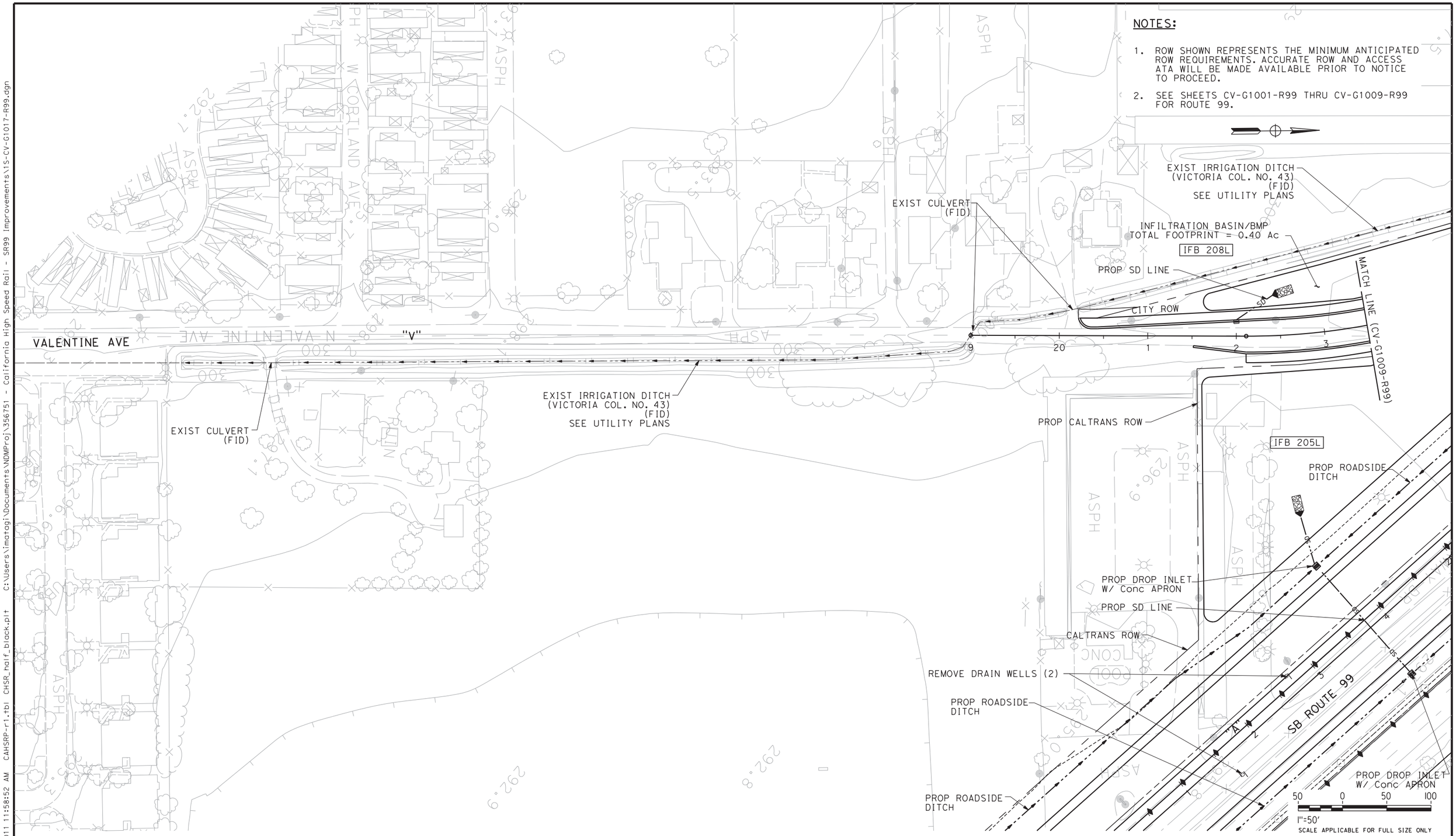

NOTES:

1. ROW SHOWN REPRESENTS THE MINIMUM ANTICIPATED ROW REQUIREMENTS. ACCURATE ROW AND ACCESS ATA WILL BE MADE AVAILABLE PRIOR TO NOTICE TO PROCEED.
2. SEE SHEETS CV-G1001-R99 THRU CV-G1009-R99 FOR ROUTE 99.

REV	DATE	BY	CHK	APP	DESCRIPTION

DESIGNED BY I. MATAGI
DRAWN BY J. TYLER
CHECKED BY R. HENDERSON
IN CHARGE F. NOBARI
DATE 12/08/11

PROPOSED PRELIMINARY DESIGN

NOT FOR CONSTRUCTION

AECOM Technical Services, Inc.
2020 L Street, Suite 300
Sacramento, CA 95811
CH2MHILL

CALIFORNIA HIGH-SPEED RAIL AUTHORITY

CALIFORNIA HIGH-SPEED TRAIN PROJECT
SIERRA SUBDIVISION
PACKAGE 1A
ROADWAY
GRADING AND DRAINAGE PLAN
SR 99 RE-ALIGNMENT

CONTRACT NO.
DRAWING NO. CV-G1017-R99
SCALE AS SHOWN
SHEET NO.

imatagi 12/2/2011 11:58:52 AM CAHSRP-r1.tbl CHSR_half_black.plt C:\Users\imatagi\Documents\NDMProj\356751 - California High Speed Rail - SR99 Improvements\1S-CV-G1017-R99.dgn 12/2/2011 11:58:52 AM

2/16/2012 5:58:46 PM CAHSRP-R1.TBL CHSR_half_black.plt C:\Documents and Settings\ychiu\My Documents\NDMProj\356751 - California High Speed Rail - SR99 Improvements\1S-CV-G1018-R99_OPTION

NOTE:

1. ROW SHOWN REPRESENTS THE MINIMUM ANTICIPATED ROW REQUIREMENTS. ACCURATE ROW AND ACCESS DATA WILL BE MADE AVAILABLE PRIOR TO NOTICE TO PROCEED.

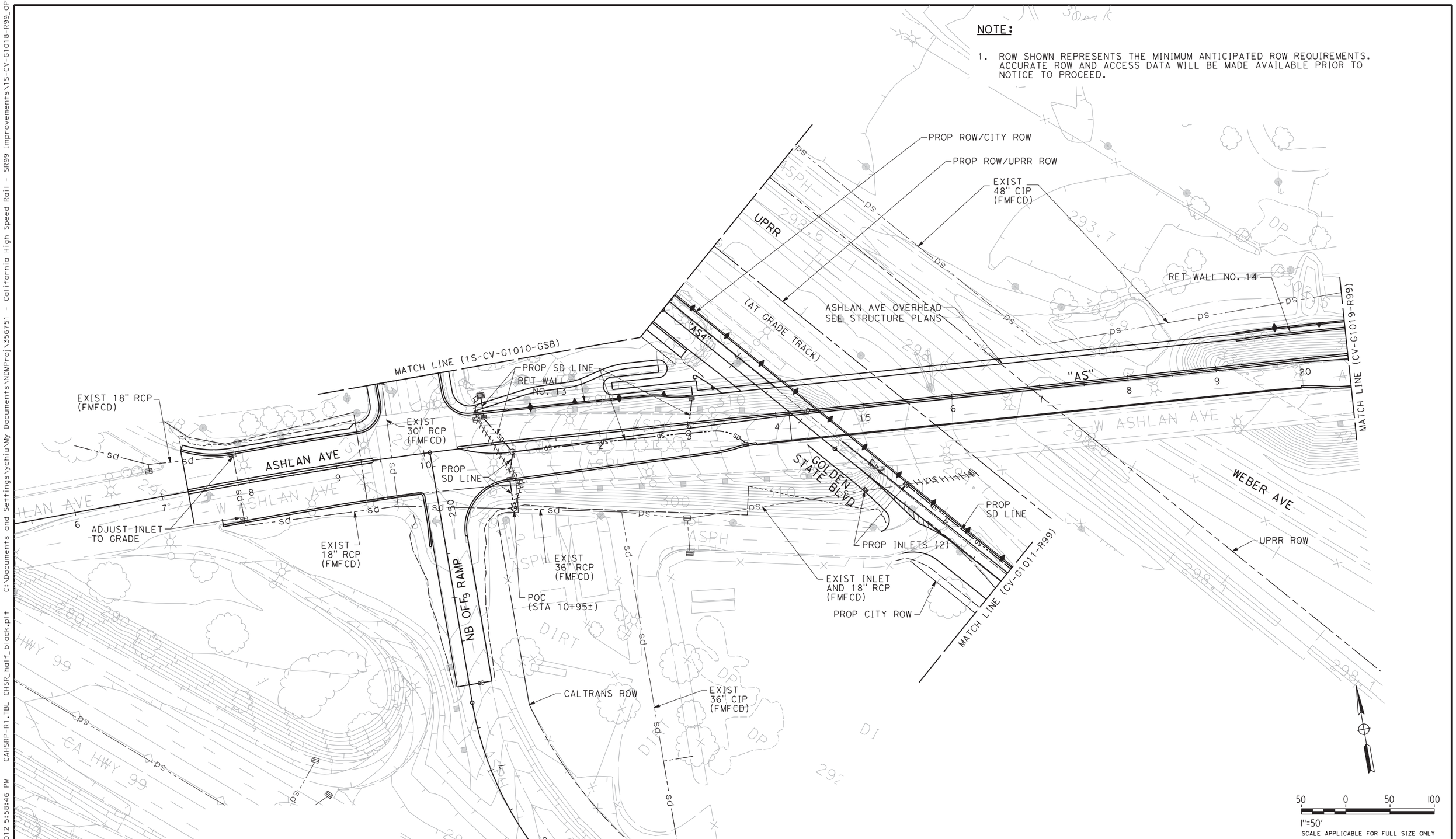

REV	DATE	BY	CHK	APP	DESCRIPTION

DESIGNED BY I. MATAGI
DRAWN BY J. TYLER
CHECKED BY R. HENDERSON
IN CHARGE F. NOBARI
DATE 2/17/12

PROPOSED PRELIMINARY DESIGN

NOT FOR CONSTRUCTION

AECOM Technical Services, Inc.
2020 L Street, Suite 300
Sacramento, CA 95811
CH2MHILL

CALIFORNIA HIGH-SPEED RAIL AUTHORITY

CALIFORNIA HIGH-SPEED TRAIN PROJECT
SIERRA SUBDIVISION
PACKAGE 1A
ROADWAY
GRADING AND DRAINAGE PLAN
SR 99 RE-ALIGNMENT

CONTRACT NO.
DRAWING NO. CV-G1018-R99
SCALE AS SHOWN
SHEET NO.

ychiu 2/16/2012 5:58:47 PM

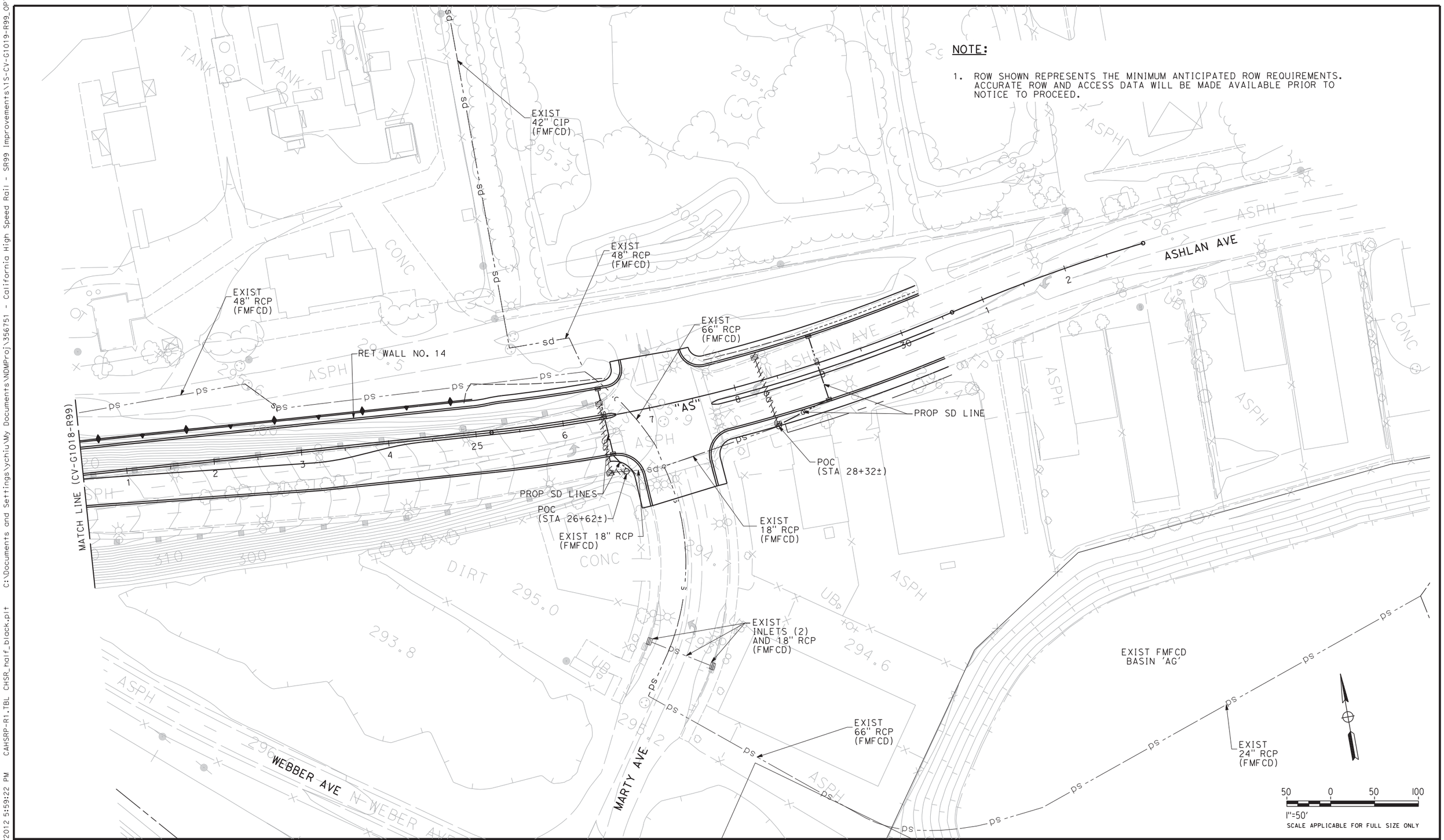

REV	DATE	BY	CHK	APP	DESCRIPTION

DESIGNED BY I. MATAGI
DRAWN BY J. TYLER
CHECKED BY R. HENDERSON
IN CHARGE F. NOBARI
DATE 2/17/12

PROPOSED PRELIMINARY DESIGN

NOT FOR CONSTRUCTION

AECOM Technical Services, Inc.
2020 L Street, Suite 300
Sacramento, CA 95811
CH2MHILL

CALIFORNIA HIGH-SPEED RAIL AUTHORITY

CALIFORNIA HIGH-SPEED TRAIN PROJECT
SIERRA SUBDIVISION
PACKAGE 1A
ROADWAY
GRADING AND DRAINAGE PLAN
SR 99 RE-ALIGNMENT

CONTRACT NO.
DRAWING NO. CV-G1019-R99
SCALE AS SHOWN
SHEET NO.

ychiu 2/16/2012 5:59:22 PM CAHSRP-R1.TBL CHSR_half_black.plt C:\Documents and Settings\ychiu\My Documents\NDMProj\356751 - California High Speed Rail - SR99 Improvements\15-CV-G1019-R99_OPTION
2/16/2012 5:59:23 PM

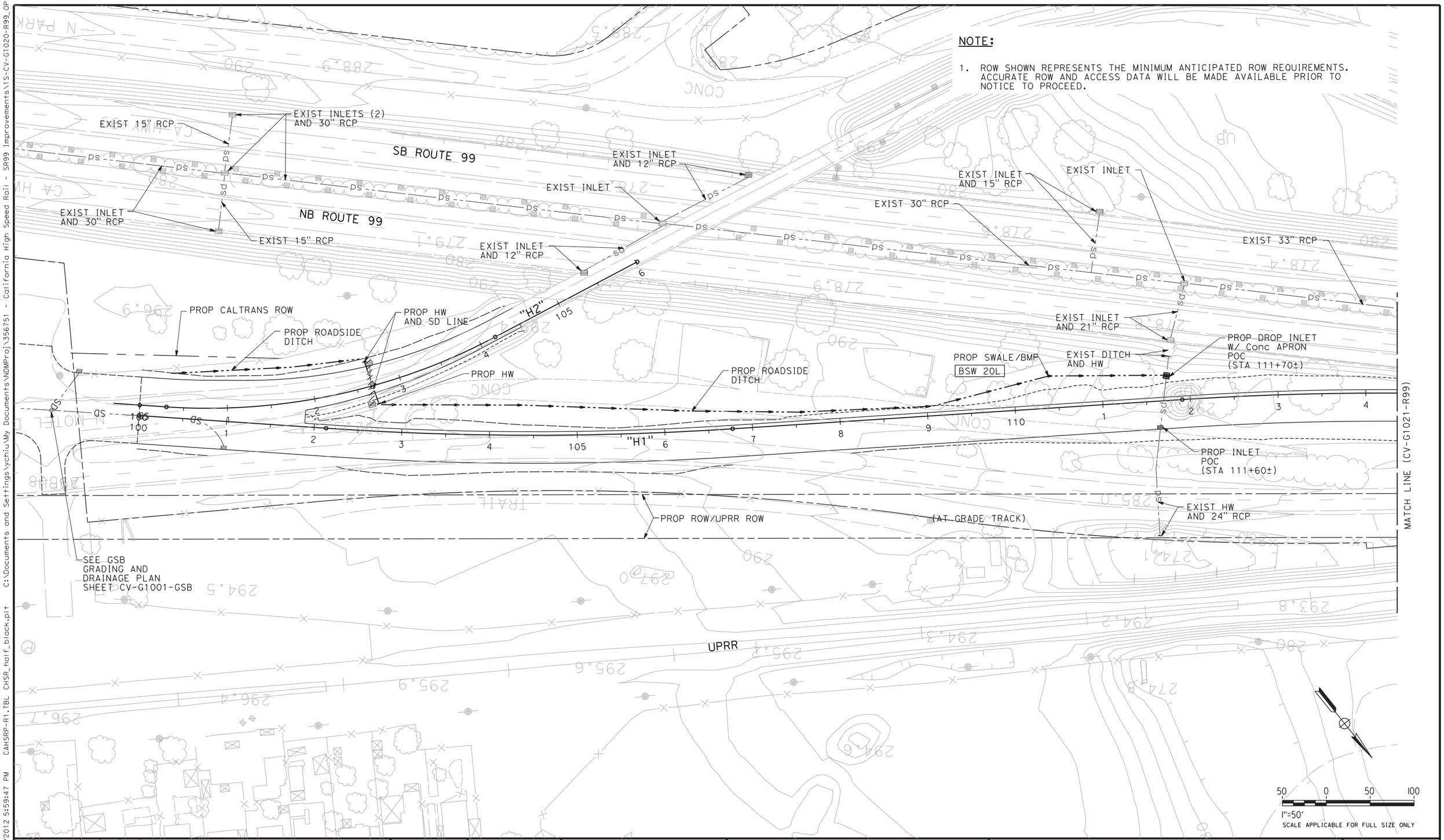

REV	DATE	BY	CHK	APP	DESCRIPTION

DESIGNED BY I. MATAGI
DRAWN BY J. TYLER
CHECKED BY R. HENDERSON
IN CHARGE F. NOBARI
DATE 2/17/12

PROPOSED PRELIMINARY DESIGN

NOT FOR CONSTRUCTION

AECOM Technical Services, Inc.
2020 L Street, Suite 300
Sacramento, CA 95811

CH2MHILL

CALIFORNIA HIGH-SPEED RAIL AUTHORITY

CALIFORNIA HIGH-SPEED TRAIN PROJECT
SIERRA SUBDIVISION
PACKAGE 1A
ROADWAY
GRADING AND DRAINAGE PLAN
SR 99 RE-ALIGNMENT

CONTRACT NO.
DRAWING NO. CV-G1020-R99
SCALE AS SHOWN
SHEET NO.

2/16/2012 5:59:47 PM CAHSRP-R1.TBL CHSR_half_black.plt C:\Documents and Settings\ychiu\My Documents\NDMProj\356751 - California High Speed Rail - SR99 Improvements\15-CV-G1020-R99_OPTION
ychiu 2/16/2012 5:59:47 PM

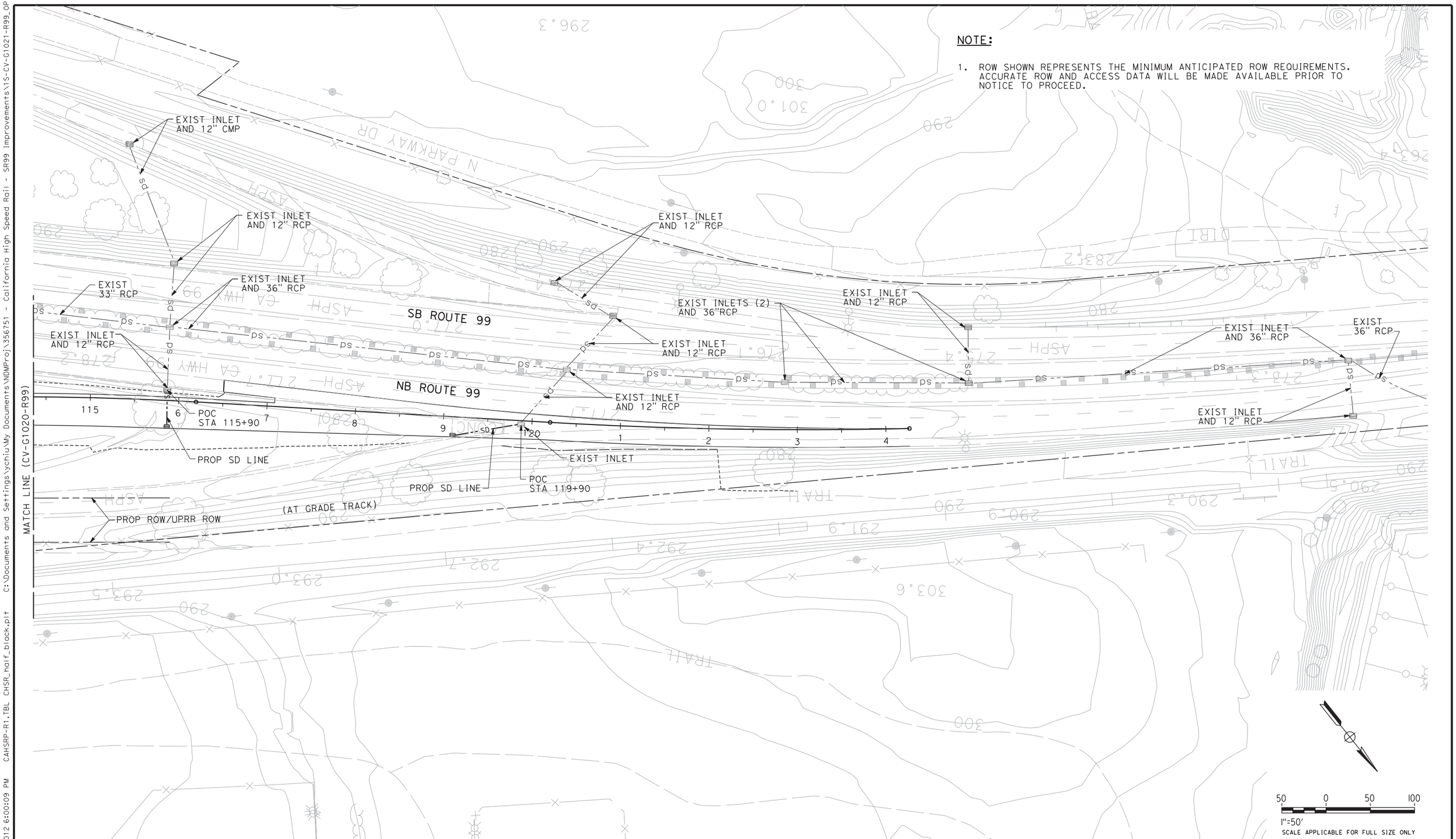

NOTE:

1. ROW SHOWN REPRESENTS THE MINIMUM ANTICIPATED ROW REQUIREMENTS. ACCURATE ROW AND ACCESS DATA WILL BE MADE AVAILABLE PRIOR TO NOTICE TO PROCEED.

REV	DATE	BY	CHK	APP	DESCRIPTION

DESIGNED BY I. MATAGI
DRAWN BY J. TYLER
CHECKED BY R. HENDERSON
IN CHARGE F. NOBARI
DATE 2/17/12

PROPOSED PRELIMINARY DESIGN

NOT FOR CONSTRUCTION

AECOM Technical Services, Inc.
2020 L Street, Suite 300
Sacramento, CA 95811
CH2MHILL

CALIFORNIA HIGH-SPEED RAIL AUTHORITY

CALIFORNIA HIGH-SPEED TRAIN PROJECT
SIERRA SUBDIVISION
PACKAGE 1A
ROADWAY
GRADING AND DRAINAGE PLAN
SR 99 RE-ALIGNMENT

CONTRACT NO.
DRAWING NO. CV-G1021-R99
SCALE AS SHOWN
SHEET NO.

2/16/2012 6:00:09 PM CAHSRP-R1.TBL CHSR_half_black.plt C:\Documents and Settings\ychiu\My Documents\NDMProj\356751 - California High Speed Rail - SR99 Improvements\15-CV-G1021-R99_OPTION ychiu